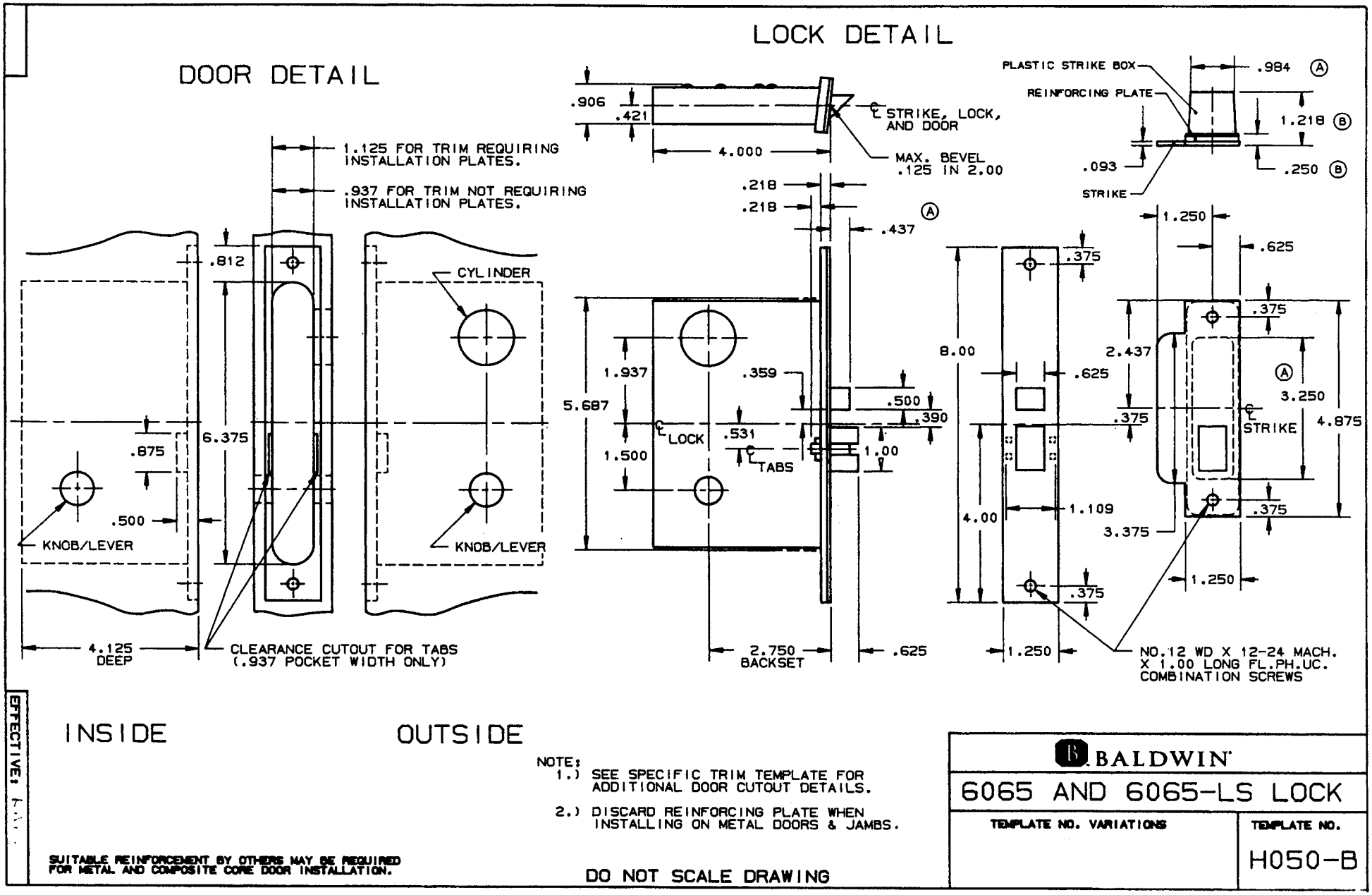

NOTE:
1.) SEE SPECIFIC TRIM TEMPLATE FOR ADDITIONAL DOOR CUTOUT DETAILS.

2.) DISCARD REINFORCING PLATE WHEN INSTALLING ON METAL DOORS & JAMBS.

SUITABLE REINFORCEMENT BY OTHERS MAY BE REQUIRED FOR METAL AND COMPOSITE CORE DOOR INSTALLATION.

DO NOT SCALE DRAWING

EFFECTIVE:

BALDWIN

6065 AND 6065-LS LOCK

TEMPLATE NO. VARIATIONS	TEMPLATE NO.
	H050-B