DOOR DETAIL

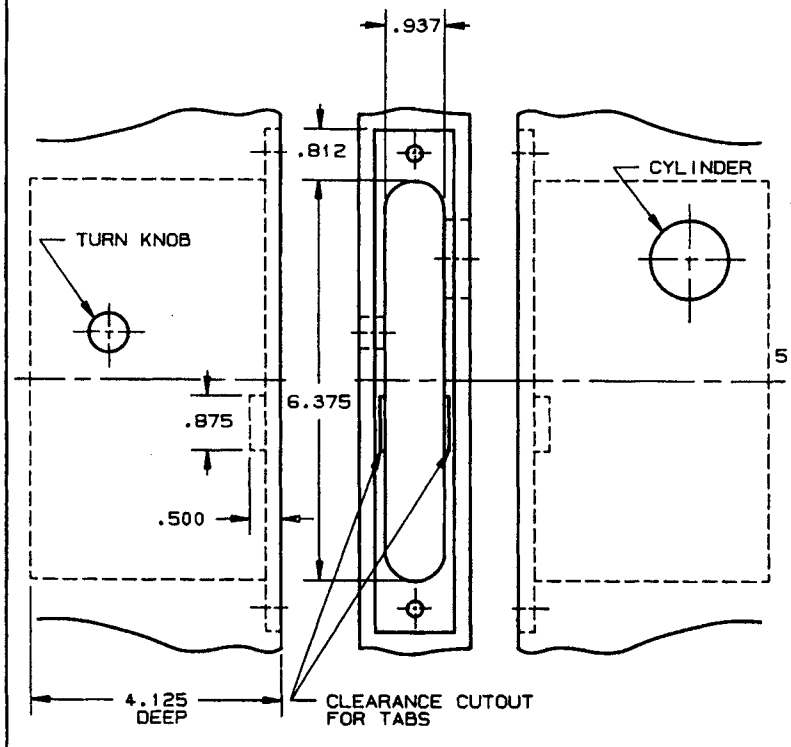

LOCK DETAIL

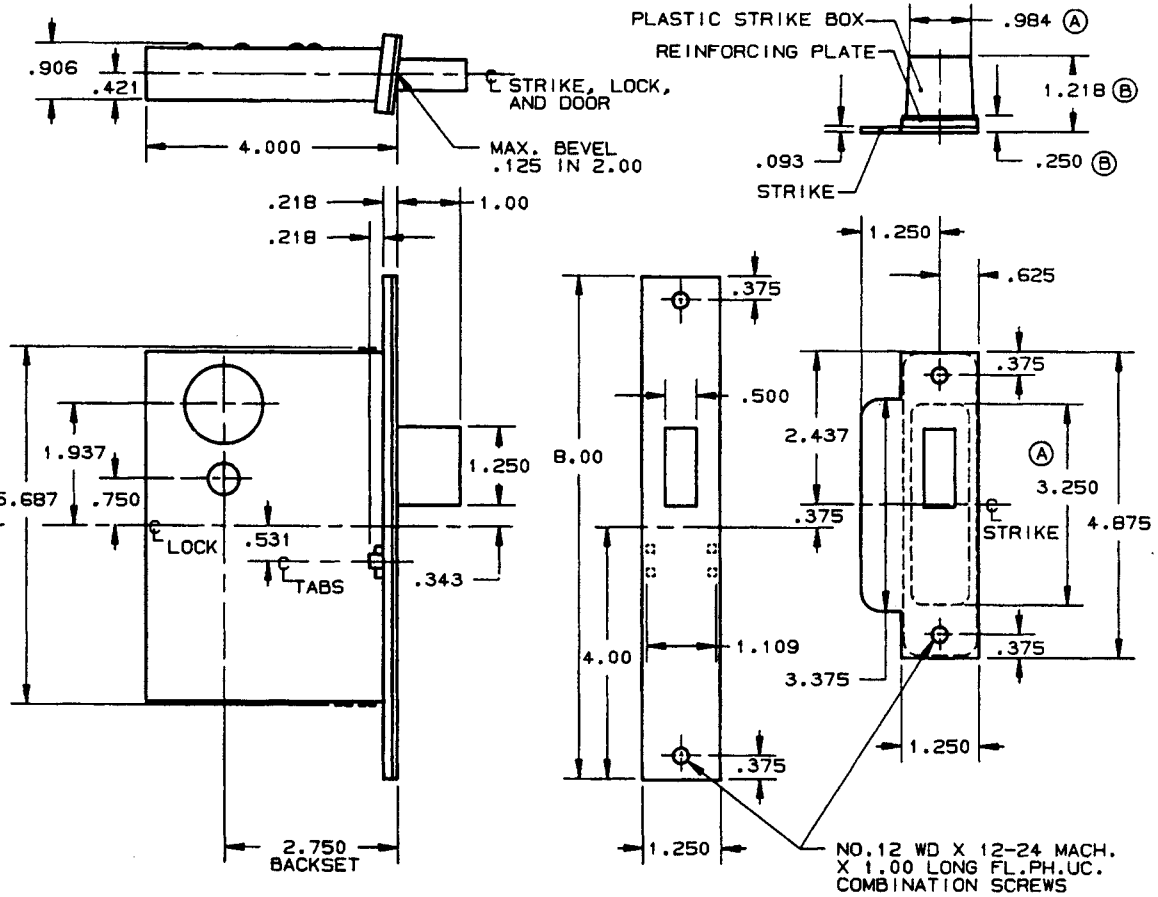

INSIDE

OUTSIDE

NOTE:
1.) SEE SPECIFIC TRIM TEMPLATE FOR ADDITIONAL DOOR CUTOUT DETAILS.

2.) DISCARD REINFORCING PLATE WHEN INSTALLING ON METAL DOORS & JAMBS.

SUITABLE REINFORCEMENT BY OTHERS MAY BE REQUIRED FOR METAL AND COMPOSITE CORE DOOR INSTALLATION.

DO NOT SCALE DRAWING

EFFECTIVE: 1-31-91

BALDWIN

6160 DEADLOCK

TEMPLATE NO. VARIATIONS	TEMPLATE NO.
	H110-B

©1991 by Baldwin Hardware Corporation