DOOR DETAIL

LOCK DETAIL

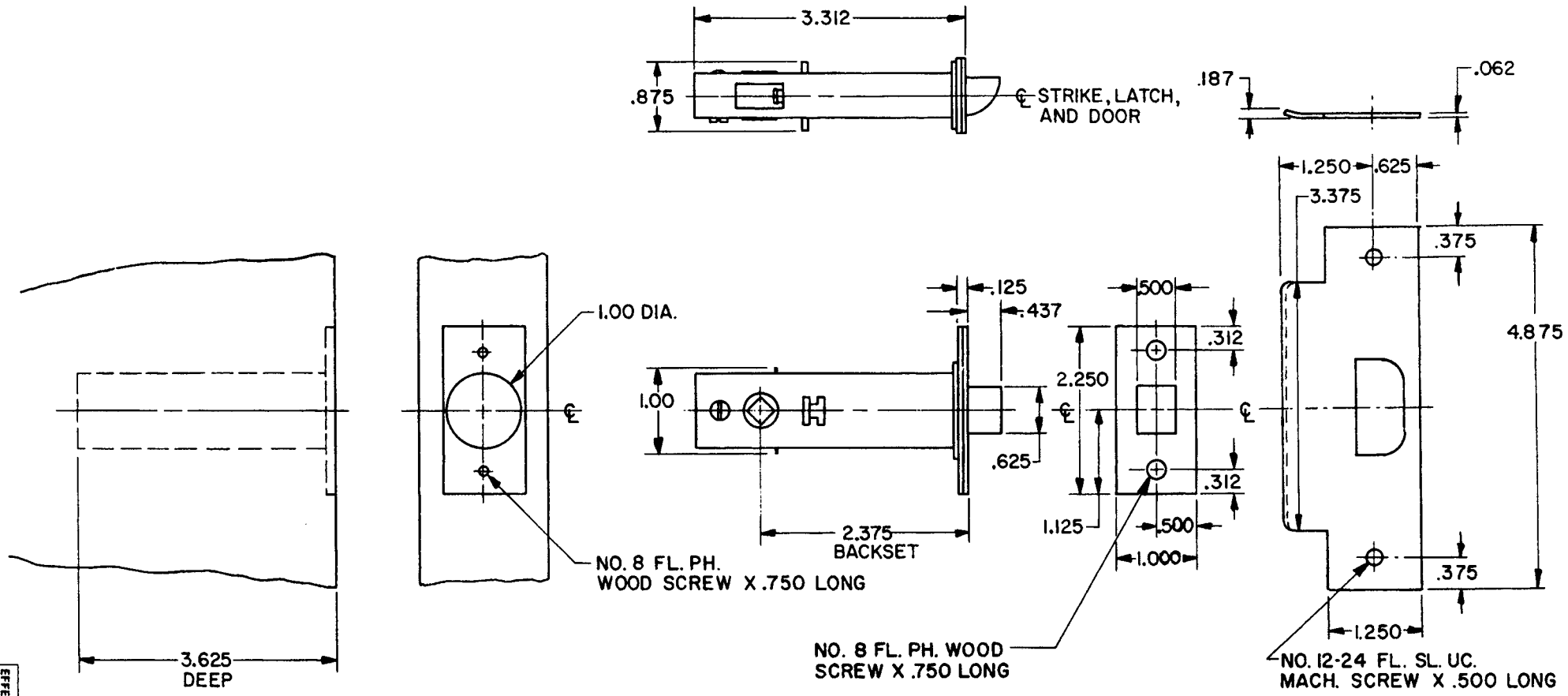

NOTE:
1.) SEE SPECIFIC TRIM TEMPLATE FOR ADDITIONAL DOOR CUTOUT DETAILS.

DO NOT SCALE DRAWING

BALDWIN

8510-ASA TUBULAR LATCH

TEMPLATE NO. VARIATIONS	TEMPLATE NO.
F160, F162, F163, F164 F165, F166 F167	F161

EFFECTIVE: 9-1-86 RA

© 1986 by Baldwin Hardware Corporation