2018

Pfister®

WHOLESALE PRICE GUIDE

NEW COLLECTIONS

RHEN

CONTEMPRA
BRUSHED GOLD & MATTE BLACK

STELLEN
WITH REACT

1/2" THERMOSTATIC
TRIM

DECKARD

Pfister

DIRECT CUSTOMERS

To place orders or check order status.
Phone · 800-422-4278 / Fax · 800-847-4288
Email · pfisterorders@spectrumbrands.com

AIR FREIGHT ORDERS
Fax · 866-507-8368
Email · pfisterairorders@spectrumbrands.com

For technical, warranty or installation questions
Phone · 1-800-732-8238

KITCHEN | PAGE 01

BATH | PAGE 18

PFIRST SERIES & JOB PACKS | PAGE 263

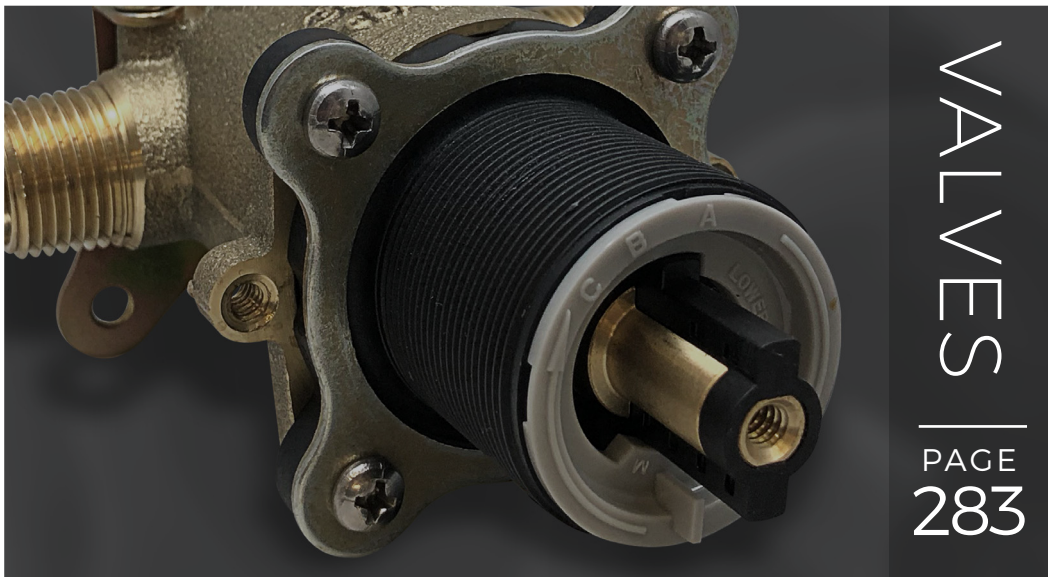

VALVES | PAGE 283

KITCHEN

TECHNOLOGY

Filtration

Lita™ with Xtract™
Page 4

SHOWROOM PREFERRED

Electronic

Stellen™ with React™
Page 4

PULL-DOWNS

Kai™
Page 4

SHOWROOM PREFERRED

Zuri™
Page 5

SHOWROOM PREFERRED

Zuri™
Page 5

SHOWROOM PREFERRED

Port Haven™
Page 5

SHOWROOM PREFERRED

Lita™
Page 6

SHOWROOM PREFERRED

Wheaton™
Page 6

SHOWROOM PREFERRED

Ashfield™
Page 6

SHOWROOM PREFERRED

Ashfield™
Page 7

SHOWROOM PREFERRED

Mystique™
Page 7

SHOWROOM PREFERRED

Hanover™
Page 8

SHOWROOM PREFERRED

Stellen™
Page 8

Pfirst Series
Page 264

PULL-OUTS

Marielle®
Page 8

SHOWROOM PREFERRED

Arkitek™
Page 9

Parisa®
Page 9

Pfirst Series
Page 264

SINGLE CONTROL & TWO HANDLE

Marielle®
Page 10

SHOWROOM PREFERRED

Ashfield™
Page 10

SHOWROOM PREFERRED

Marielle®
Page 11

SHOWROOM PREFERRED

SINGLE CONTROL & TWO HANDLE

Treviso™
Page 11

Avalon™
Page 11

Treviso™
Page 13

Avalon™
Page 13

Portland™
Page 12

Pfirst Series
Page 264

BATH

Rhen™
Page 44
SHOWROOM PREFERRED

Kenzo™
Page 60
SHOWROOM PREFERRED

Ashfield™
Page 76
SHOWROOM PREFERRED

Arterra™
Page 86
SHOWROOM PREFERRED

Marielle®
Page 96
SHOWROOM PREFERRED

Contempra®
Page 106
SHOWROOM PREFERRED

Deckard™
Page 114

Northcott™
Page 122

Bronson™
Page 130

Saxton™
Page 138

Avalon™
Page 146

Arkitek™
Page 154

Serrano™
Page 162

Weller™
Page 170

Parisa®
Page 178

Pfirst Series
Page 273

WE DO FIXTURES THAT FIT LIFESTYLES.

For more than a century, families have been welcoming Pfister into their homes. We repay that favor with respect for value, craftsmanship and design that never goes out of style.

Functionality that elevates everyday life is our promise, a promise from people who think through every element of every fixture in our collection.

Our goal is simple; we want thoughtfully designed faucets to frame the heart of your home – for a long time to come.

We're here for you, ever ready to continue earning your trust.

Xtract™ Filter Mode

XTRACT™

Advanced Filtration. 2X Faster

faucets with Xtract technology deliver great-tasting filtered and regular tap water from a single faucet, 2X faster than typical water filter products. Xtract uses GE® 2X High Flow Filtration which reduces contaminants such as pharmaceuticals, chlorine, and lead.

React™

React™

Response Activated Technology

Pfister's REACT faucets put you in charge when things get hectic in the kitchen. Simply guide your hand or an object within 3" in front of the sensor to turn the water on or off. Minimize water spots, fingerprints, and the spread of germs with this reliable, touch-free faucet.

Ultra Seal™

UltraSeal™

Pfister's UltraSeal cartridge is a premium upgrade to your showroom preferred faucet that improves your overall experience by offering you lifelong protection against leaks. Pfister ensures the strongest connection point to the handle with larger ceramic discs and an all-brass ¼-turn cartridge technology. UltraSeal cartridges can be retrofitted into most existing widespread faucets.

AccuDock™

AccuDock™

AccuDock is Pfister's advanced sprayhead docking technology which ensures a secure, tight connection of the pull-down spray head to the faucet spout every time. The AccuDock technology guarantees the spray head will stay securely in place after every use.

PUSH & SEAL™

Push & Seal™

Push & Seal is an innovative drain assembly that is easy to install and even easier to use. No tools are required, and it installs in half the time of a standard pop-up drain. Press to seal and again to open. It is really that easy.

ICON LEGEND

CEC COMPLIANT

All model numbers beginning with LG, G and GT's meet the requirements of the California Energy Commission

ADA COMPLIANT

Models displaying the International Symbol of Accessibility are accessible by physically disadvantaged persons and meet all ADA/ANSI A117.1 requirements. The ADA symbol applies to valve control only

CAL GREEN COMPLIANT

All items with this logo meet or exceed the flow rate criteria of the California Green Building Code

ULTRASEAL™

All brass 1/4-turn cartridge and ceramic disc technology for lifelong leak-free operation. Retrofits into most existing widespread valve bodies

MEETS EPA WATERSENSE℠ STANDARDS

All items with the WaterSense℠ logo to the left of the model numbers meet or exceed the certification criteria of the EPA's WaterSense Program

SECUREPFIT™

This unique fixed-hub handle threads directly to the valve cartridge for significant structural rigidity

NSF LEAD-FREE CERTIFIED

All kitchen and lavatory model numbers starting with the prefix "GT" or "LG" meet NSF 61/9 Annex G Lead Requirements

WATERSENSE℠

As one of the first faucet companies to be certified by the Environmental Protection Agency's (EPA) WaterSense program, we've been a proven leader of green projects since 2007. Our WaterSense certified products are engineered to reduce water consumption by 30 percent or more, compared to the standard flow, without sacrificing performance.

CEC COMPLIANT

Pfister faucets meet the California Energy Commission's (CEC) standards for water appliances. CEC compliant faucets and shower heads use significantly less water than standard products while still meeting the strict performance guidelines of WaterSense.

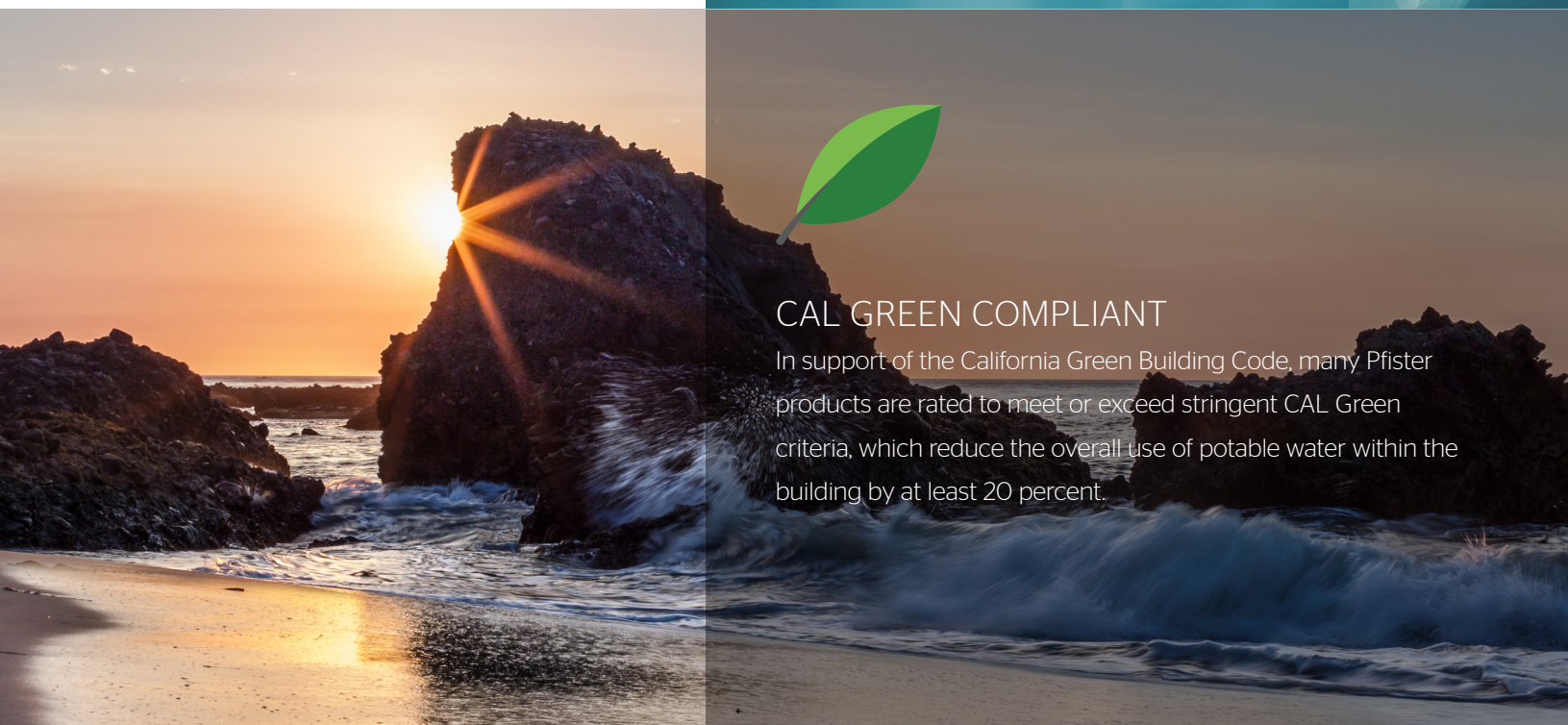

CAL GREEN COMPLIANT

In support of the California Green Building Code, many Pfister products are rated to meet or exceed stringent CAL Green criteria, which reduce the overall use of potable water within the building by at least 20 percent.

WATER CONSERVATION

Pfister makes it easy to conserve water. Eco-Pfriendly™ aerators and inserts are available for Kitchen, Lavatory and Showerhead products. Locate your product on the following charts to choose the correct option for your water conserving needs.

Kitchen		0.5 gpm Spare Part SKU#			1.0 gpm Spare Part SKU#			1.5 gpm Spare Part SKU#		
Family	Series	941-818	941-819	941-820	941-445	941-449	941-450	941-785	941-786	941-787
Ashfield	GT-529		•		•			•		
Ashfield	LG-531		•		•			•		
Ashfield	LG-26			•		•			•	
Ashfield	LG-72			•		•			•	
Avalon	GT-26			•		•			•	
Avalon	GT-36			•		•			•	
Briarsfield	GT-529			•		•			•	
Clairmont	GT-534			•		•			•	
Hanover	GT-526		•		•			•		
Hanover	GT-529		•		•			•		
Lita	GT-529			•		•			•	
Lita	GT-72			•		•			•	
Marielle	LG-26			•		•			•	
Marielle	GT-34			•		•			•	
Marielle	GT-72			•		•			•	
Marielle	LG-532			•		•			•	
Mystique	GT-529			•		•			•	
Parisa	GT-534			•		•			•	
Pfirst Series	G134-5		•		•			•		
Pfirst Series	G134-6		•		•			•		
Pfirst Series	G134-7		•		•			•		
Pfirst Series	G135-7		•		•			•		
Pfirst Series	G136-2		•		•			•		
Pfirst Series	G136-5		•		•			•		
Pfirst Series	G127		•		•			•		
Pfirst Series	G171-40		•		•			•		
Pfirst Series	G529			•		•			•	
Port Haven	GT-31			•		•			•	
Portland	GT-34			•		•			•	
Stellen	LG-529	•					•			•
Stellen	LG-529-E	•					•			•
Treviso	GT-529		•		•			•		
Treviso	LG-26			•		•			•	
Treviso	GT-36			•		•			•	
Wheaton	GT-529			•		•			•	
Zuri	GT-529-MP			•		•			•	
Zuri	GT-529-MC			•		•			•	

Bath		0.35 GPM Spare Part SKU#				0.5 GPM Spare Part SKU #				1.0 GPM Spare Part SKU#				
Family	Series	941-435	941-438	941-439	941-441	941-434	941-818	941-819	941-820	941-442	941-448	941-449	941-450	941-663
Arkitek	LG-42			•					•			•		
Arkitek	LG-49			•					•			•		
Arterra	LG-40/LG-42	•				•				•				
Arterra	LG-49	•				•				•				
Avalon	LG-42			•					•			•		
Avalon	LG-48			•					•			•		
Avalon	LG-49			•					•			•		
Bronson	LG-48	•				•				•				
Bronson	LG-49	•				•				•				
Deckard	LG-42													•
Deckard	LG-49													•
Contempra	LG-40/LG-42				•		•						•	
Contempra	LG-49				•		•						•	
Iyla	LG-40/LG-42	•				•				•				
Iyla	LG-49	•				•				•				
Marielle	LG-46				•		•						•	
Marielle	LG-49			•					•			•		
Northcott	LG-42	•				•				•				
Northcott	LG-48	•				•				•				
Northcott	LG-49	•				•				•				
Parisa	LG-42			•					•			•		
Park Avenue	LG-42	•				•				•				
Park Avenue	LG-49	•				•				•				
Pfirst Series	LG-142-5/6		•					•			•			
Pfirst Series	LG-142-7/8		•					•			•			
Pfirst Series	LG-143-5/6		•					•			•			
Pfirst Series	LG-143-51/61		•					•			•			
Pfirst Series	LG-148-6		•					•			•			
Pfirst Series	LG-148-7		•					•			•			
Pfirst Series	LG-149-60		•					•			•			
Pfirst Series	LG-149-6X		•					•			•			
Pfirst Modern	LG-42			•					•			•		
Saxton	LG-48	•				•				•				
Saxton	LG-49	•				•				•				
Serrano	LG-42			•					•			•		
Serrano	LG-48			•					•			•		
Serrano	LG-49			•					•			•		
Tisbury	LG-42	•				•				•				
Tisbury	LG-49	•				•				•				
Weller	LG-42	•				•				•				
Weller	LG-48	•				•				•				
Weller	LG-49	•				•				•				

Water Conservation – Kitchens

	Model	Finish	Case Qty	List Price
Eco-Pfriendly™ Aerator 1.75gpm Aerator Insert	941-292Ø	N/A	1	$6
	941-293Ø	N/A	1	$6

	Model	Finish	Case Qty	List Price
Eco-Pfriendly™ Aerator 1.5gpm Aerator Insert	941-785Ø	N/A	1	$6
	941-786Ø	N/A	1	$6
	941-787Ø	N/A	1	$6

Eco-Pfriendly™ Aerator 1.0gpm Aerator Insert	941-448Ø	N/A	1	$6
	941-449Ø	N/A	1	$6
	941-444Ø	N/A	1	$6

Eco-Pfriendly™ Aerator 0.5gpm Aerator Insert	941-818Ø	N/A	1	$6
	941-819Ø	N/A	1	$6
	941-82ØØ	N/A	1	$6

Water Conservation - Lavatory Faucets

	Model	Finish	Case Qty	List Price
Eco-Pfriendly™ Aerator 0.35gpm Aerator Insert	941-438Ø	N/A	1	$6
	941-439Ø	N/A	1	$6
	941-441Ø	N/A	1	$6
	941-437Ø	N/A	1	$6
	941-436Ø	N/A	1	$6

	Model	Finish	Case Qty	List Price
Eco-Pfriendly™ Aerator 0.5gpm Aerator Insert	941-818Ø	N/A	1	$6
	941-819Ø	N/A	1	$6
	941-82ØØ	N/A	1	$6
	941-432Ø	N/A	1	$6
	941-434Ø	N/A	1	$6

Eco-Pfriendly™ Aerator 1.0gpm Aerator Insert	941-448Ø	N/A	1	$6
	941-449Ø	N/A	1	$6
	941-45ØØ	N/A	1	$6
	941-445Ø	N/A	1	$6
	941-444Ø	N/A	1	$6
	941-442Ø	N/A	1	$6
	941-663Ø	N/A	1	$6

Water Conservation - Handheld & Showerheads

	Model	Finish	Case Qty	List Price
1.75 gpm Eco-Pfriendly™ Showerhead Insert	941-377Ø	N/A	1	$6

	Model	Finish	Case Qty	List Price
1.5 gpm Eco-Pfriendly™ Showerhead Insert	941-Ø55Ø	N/A	1	$6

KITCHEN

Xtract™ 02
React™ 03
Pull-Down/Pull-Out Faucets 04
Single Control Faucets 10
Prep/Bar/Laundry Faucets 14
Kitchen Accessories 16

XTRACT™

Advanced Filtration. 2X Faster.

Pfister faucets with Xtract technology deliver great-tasting filtered water and regular tap water from a single faucet, 2X faster than typical water filter products. Xtract uses GE® 2X High Flow Filtration which reduces contaminants such as pharmaceuticals, chlorine, and lead.

XTRACT™ Filter Mode
Activate Xtract Filter Mode by simply moving the handle back.

Tap Water
Regular handle use for washing dishes.

GE APPLIANCES

2X High Flow Filtration Included

Up to
6 Month
Filter Life

Pfister faucets with Xtract™ reduce the following contaminants from tap water:

- Chlorine Taste & Odor
- Select Pharmaceuticals †
- Select Pesticides, Insecticides & Herbicides
- Lead & Mercury

† REDUCES: Atrazine, Lindane, Toxaphene, Mercury, Atenol, Carbamazepine, Trimethoprim, Linuron, Estrone, BPA, and Nonyl Phenol

† Incidental contaminants/emerging compounds which have been detected in drinking water supplies at trace levels can affect public acceptance/perception of drinking water quality

WARNING: Do not use with water that is microbiologically unsafe or of unknown quality, without adequate disinfection before or after the system

REACT™

Touch-Free Technology

Pfister faucets with REACT™ put you in charge. Speed through food prep, dish washing and clean-up. Reliable, touch-free operation keeps the spread of germs in check and reduces fingerprints and water spots.

REACT™ Sensor

Simply guide your hand within 3" in front of the sensor range to turn the water on or off.

Temp Adjust

Temp Adjust gives you the freedom to dial in your ideal water temperature in sensor mode. Set it once and forget it or adjust it as often as you like.

OPEN VALVE SYSTEM

By tilting the handle to the outward position, it gives you a clear visual indicator when the electronic mode is engaged.

MANUAL OVERRIDE

The sensor can be overridden by turning the dial on the control box counter-clockwise. The faucet can then be used manually.

THREE-FUNCTION SPRAYHEAD

Toggle between spray, stream, and pause modes right in the palm of your hand for efficient rinsing, cleaning, and filling functionality.

SHOWROOM PREFERRED

Lita™ with Xtract™
Single Handle Pull-Down Faucet with Xtract™ Filtration Technology

Model	Finish	Case Qty	List Price
GT529-FLC	Polished Chrome	3	$647
GT529-FLS	Stainless Steel	3	$699

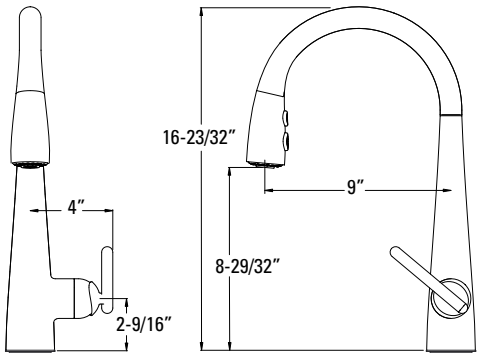

Technical Info

Holes: • 1 or 3-Hole 8" Installation

Features:
- XTRACT™ Filter Mode Push Handle Back For Filtered Water
- Metal AccuDock™ Sprayhead
- Quick and Easy Install
- Ceramic Disc Valve
- High Arc Pull-Down Swivel Spout
- Metal Lever Handle
- Three-Function Sprayhead: Stream, Spray, and Pause
- Forward Only Handle Operation
- Single Post Mounting Ring Included
- Matching Soap Dispenser (Sold Separately)
- Matching Deck Plate (961-168*) Sold Seperately
- 1.8 gpm @ 60 psi
- 1.0 gpm in Filter Mode

Stellen™ with React™
Single Handle Pull-Down Faucet

LG529-ESAC	Polished Chrome	3	$350
LG529-ESAS	Stainless Steel	3	$415
LG529-ESAB	Matte Black	3	$475

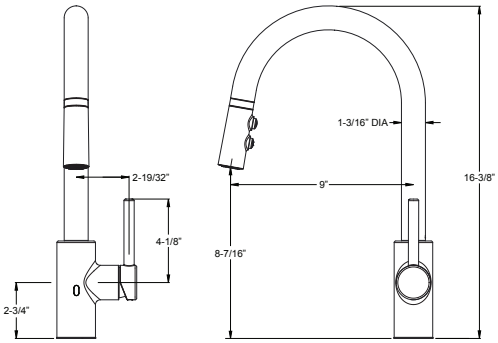

Holes: • 1 or 3-Hole 8" Installation

Features:
- React: Touch-Free Sensor Technology
- Smartstop 3-Minute Auto Shut Off
- Temp Adjust Allows For Above Deck Temperature Control
- AccuDock™ Sprayhead
- Ceramic Disc Valve
- Pfast Connect Supply Lines
- High Arc Pull-Down Swivel Spout
- Metal Lever Handle
- Three-Function Sprayhead: Stream, Spray, and Pause
- Forward Only Handle Operation
- Single Post Mounting Ring and 3-Hole Deckplate Included
- Battery Pack (952-ØØ7Ø) Sold Separately
- 1.8 gpm @ 60 psi

SHOWROOM PREFERRED

Kai™
Single Handle Pull-Down Faucet

GT529-IHC	Polished Chrome	3	$569
GT529-IHS	Stainless Steel	3	$620
GT529-IHB	Matte Black	3	$672

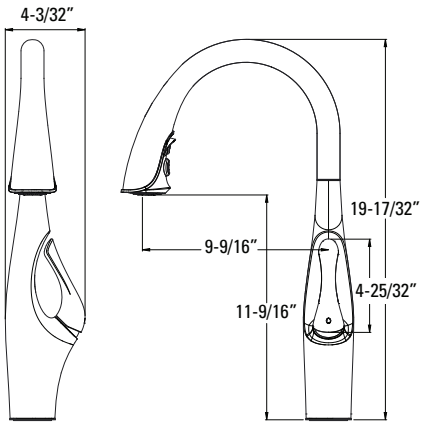

Holes: • 1 or 3-Hole 8" Installation

Features:
- Hidden Pull-Out Sprayhead
- Ceramic Disc Valve
- High Arc Pull-Down Swivel Spout
- Metal Lever Handle
- Three-Function Sprayhead: Stream, Spray, and Pause
- Forward Only Handle Operation
- Single Post Mounting Ring
- 3-Hole deckplate Sold Seperately (961-193B, 961-193S, 961-2Ø8A)
- Integrated Nylon Braided Supply Lines with 3/8" Threaded Compression Fittings
- Matching Soap Dispenser (Sold Separately)
- 1.8 gpm @ 60 psi

CEC Compliant | Cal Green Compliant | NSF Lead-Free Certified | ADA Compliant | Accudock™

SHOWROOM PREFERRED

Zuri™
Single Handle Pull-Down Culinary Faucet

Model	Finish	Case Qty	List Price
LG529-MCC	Polished Chrome	3	$517
LG529-MCS	Stainless Steel	3	$569

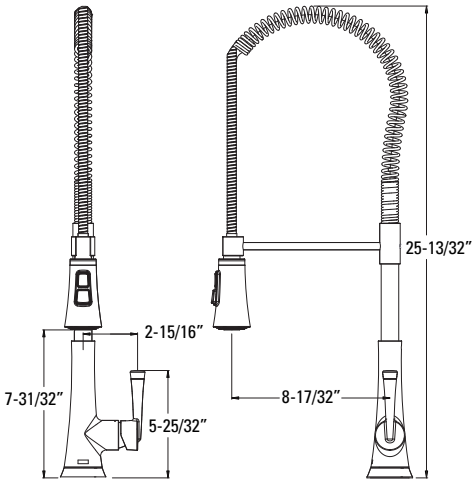

Technical Info

Holes: • 1 or 3-Hole 8" Installation

Features:
- Ceramic Disc Valve
- High Arc Pulldown Swivel Coil Spout
- Metal Lever Handle
- Pfast Connect Supply Lines
- Three-Function Sprayhead: Stream, Spray, and Pause
- Single Post Mounting Ring and 3-Hole Deckplate Included
- 1.8 gpm @ 60 psi

SHOWROOM PREFERRED

Zuri™
Single Handle Pull-Down Faucet

GT529-MPC	Polished Chrome	3	$486
GT529-MPS	Stainless Steel	3	$538

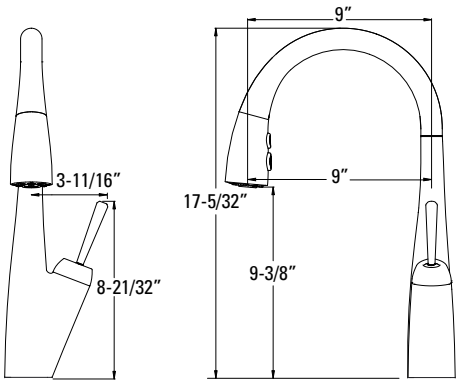

Holes: • 1 or 3-Hole 8" Installation

Features:
- Metal AccuDock™ Sprayhead
- Ceramic Disc Valve
- High Arc Pull-Down Swivel Spout
- Metal Joystick Lever Handle
- Three-Function Sprayhead: Stream, Spray, and Pause
- Single Post Mounting Ring and 3-Hole Deckplate Included
- Matching Soap Dispenser (Sold Separately)
- Integrated Nylon Braided Supply Lines with 3/8" Threaded Compression Fittings
- 1.8 gpm @ 60 psi

SHOWROOM PREFERRED

Port Haven™
Bridge Kitchen Faucet

GT31-TDC	Polished Chrome	3	$466
GT31-TDS	Stainless Steel	3	$492
GT31-TDD	Polished Nickel	3	$492
GT31-TDY	Tuscan Bronze	3	$544

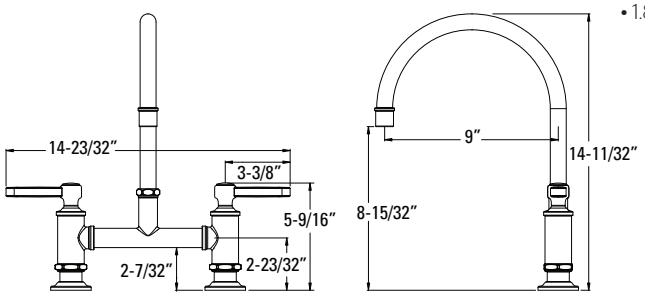

Holes: • 2-Hole 8" Installation

Features:
- Ceramic Disc Valves
- High Arc Pull-Down Swivel Spout
- Metal Lever Handles
- 8" On Center
- Included Ceramic and Metal Hot and Cold Indicator Caps
- 1.8 gpm @ 60 psi

CEC Compliant | Cal Green Compliant | NSF Lead-Free Certified | ADA Compliant | Accudock™

SHOWROOM PREFERRED

Lita™
Single Handle Pull-Down Faucet

Model	Finish	Case Qty	List Price
GT529-SMC	Polished Chrome	3	$389
GT529-SMS	Stainless Steel	3	$440
GT529-SMD	Polished Nickel	3	$465
GT529-SMB	Matte Black	3	$465

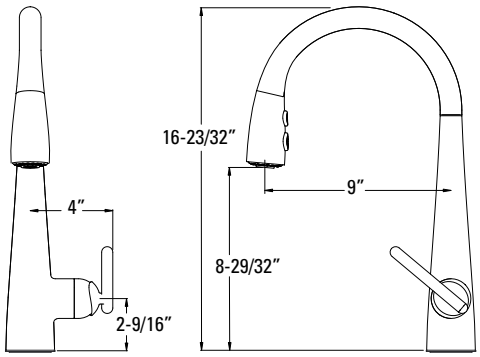

Technical Info

Holes: • 1 or 3-Hole 8" Installation

Features:
- Metal AccuDock™ Sprayhead
- Ceramic Disc Valve
- High Arc Pull-Down Swivel Spout
- Metal Lever Handle
- Three-Function Sprayhead: Stream, Spray, and Pause
- Forward Only Handle Operation
- Single Post Mounting Ring and 3-Hole Deckplate Included
- Matching Soap Dispenser (Sold Separately)
- Integrated Nylon Braided Supply Lines with 3/8" Threaded Compression Fittings
- 1.8 gpm @ 60 psi

SHOWROOM PREFERRED

Ashfield™
Two Handle Pull-Down Faucet

LG531-YPC	Polished Chrome	3	$712
LG531-YPK	Brushed Nickel	3	$823
LG531-YPY	Tuscan Bronze	3	$915

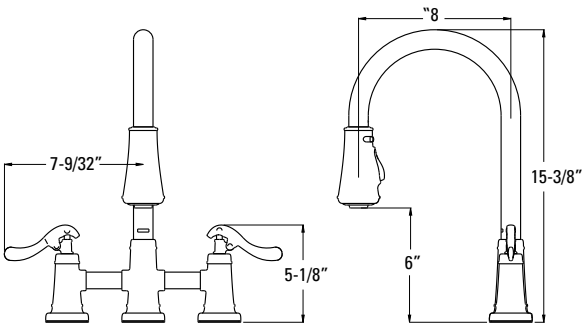

Holes: • 3-Hole 8" Installation

Features:
- Ceramic Disc Valves
- High Arc Pull-Down Swivel Spout
- Metal Lever Handles
- Two-Function Sprayhead with Volume Control: Stream and Spray Sprayhead
- 1.8 gpm @ 60 psi

SHOWROOM PREFERRED

Ashfield™
Single Handle Pull-Down Faucet with Soap Dispenser

GT529-YPC	Polished Chrome	3	$466
GT529-YPK	Brushed Nickel	3	$522
GT529-YPY	Tuscan Bronze	3	$608
GT529-YPU	Rustic Bronze	3	$591

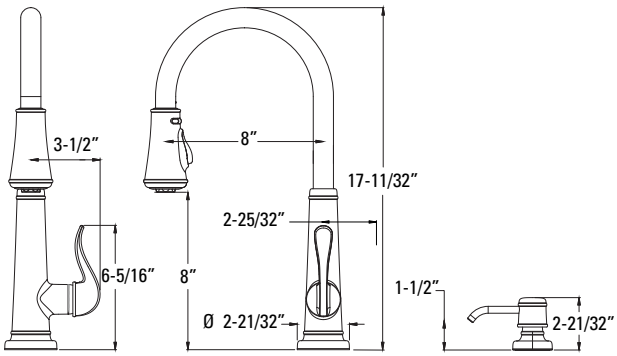

Holes: • 1, 2, 3 or 4-Hole Installation

Features:
- Ceramic Disc Valve
- High Arc Pull-Down Swivel Spout
- Metal Lever Handle
- Pfast Connect Supply Lines
- Two-Function Sprayhead with Volume Control: Stream and Spray
- Single Post Mounting Ring and 3-Hole Deckplate Included
- Matching Soap Dispenser
- 1.8 gpm @ 60 psi

CEC Compliant | Cal Green Compliant | NSF Lead-Free Certified | ADA Compliant | Accudock™

SHOWROOM PREFERRED

Mystique™
Single Handle Pull-Down Faucet with Soap Dispenser

Model	Finish	Case Qty	List Price
GT529-MDC	Polished Chrome	3	$378
GT529-MDS	Stainless Steel	3	$441

Technical Info

Holes: • 1, 2, 3, or 4-Hole Installation

Features:
- Ceramic Disc Valve
- High Arc Pull-Down Swivel Spout
- Metal Lever Handle
- Pfast Connect Supply Lines
- Three-Function Sprayhead: Stream, Spray, and Pause
- Single Post Mounting Ring and 3-Hole Deckplate Included
- Matching Soap Dispenser
- 1.8 gpm @ 60 psi

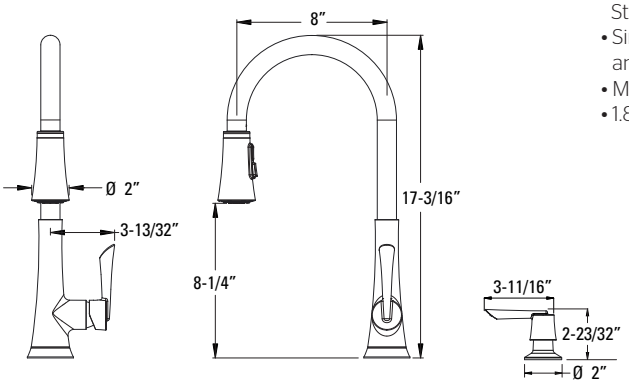

SHOWROOM PREFERRED

Hanover™
Single Handle Pull-Down Faucet with Soap Dispenser

GT529-TMC	Polished Chrome	3	$393
GT529-TMS	Stainless Steel	3	$464
GT529-TMY	Tuscan Bronze	3	$511

Holes: • 1, 2, 3 or 4-Hole Installation

Features:
- Ceramic Disc Valve
- High Arc Pull-Down Swivel Spout
- Metal Lever Handle
- Pfast Connect Supply Lines
- Two-Function Sprayhead with Volume Control: Stream and Spray
- Single Post Mounting Ring and 3-Hole Deckplate Included
- Matching Soap Dispenser
- 1.8 gpm @ 60 psi

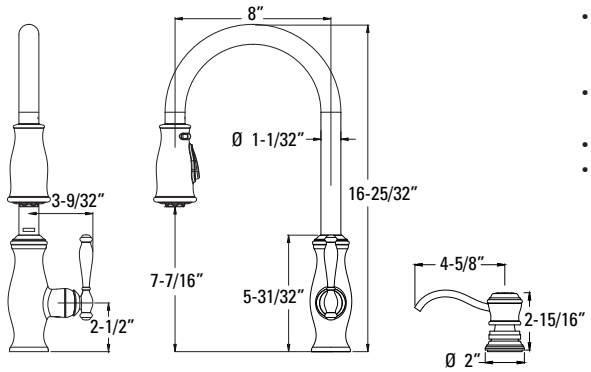

SHOWROOM PREFERRED

Wheaton™
Single Handle Pull-Down Faucet with Soap Dispenser

GT529-WH1C	Polished Chrome	3	$310
GT529-WH1S	Stainless Steel	3	$327
GT529-WH1Y	Tuscan Bronze	3	$358

Holes: • 1, 2, 3 or 4-Hole Installation

Features:
- Ceramic Disc Valve
- AccuDock™ Sprayhead
- High Arc Pulldown Swivel Spout
- Forward Only Handle Operation
- Metal Lever Handle
- Two-Function Sprayhead: Stream and Spray
- Single Post Mounting Ring and 3-Hole Deckplate Included
- Matching Soap Dispenser
- Integrated Nylon Braided Supply Lines with 3/8" Threaded Compression Fittings
- 1.8 gpm @ 60 psi

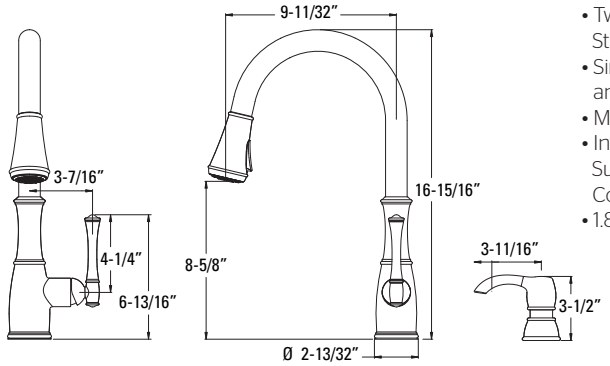

CEC Compliant | Cal Green Compliant | NSF Lead-Free Certified | ADA Compliant | Accudock™

Stellen™
Single Handle Pull-Down Faucet

Model	Finish	Case Qty	List Price
LG529-SAC	Polished Chrome	3	$239
LG529-SAS	Stainless Steel	3	$290
LG529-SAB	Matte Black	3	$368

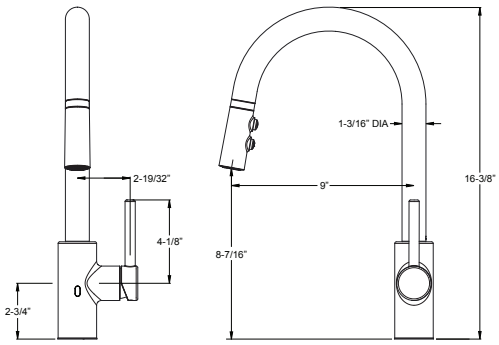

Technical Info

Holes: • 1 or 3-Hole 8" Installation

Features:
- AccuDock™ Sprayhead
- Ceramic Disc Valve
- High Arc Pull-Down Swivel Spout
- Metal Lever Handle
- Pfast Connect Supply Lines
- Three-Function Sprayhead: Stream, Spray, and Pause
- Forward Only Handle Operation
- Single Post Mounting Ring and 3-Hole Deckplate Included
- 1.8 gpm @ 60 psi

SHOWROOM PREFERRED

Hanover™
Single Handle Pull-Down Faucet with Soap Dispenser

GT526-TMC	Polished Chrome	3	$361
GT526-TMS	Stainless Steel	3	$426
GT526-TMY	Tuscan Bronze	3	$468

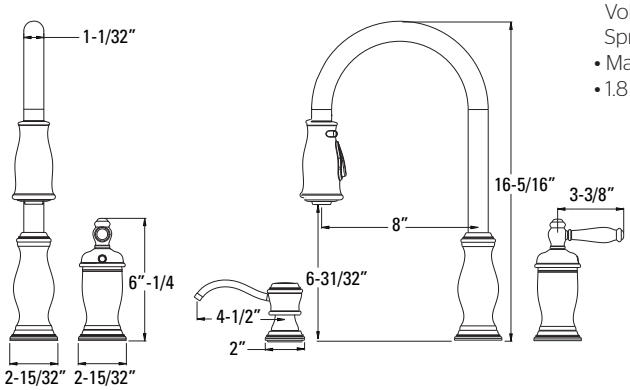

Holes: • 2 or 3-Hole 4-10" Installation

Features:
- Ceramic Disc Valve
- High Arc Pull-Down Swivel Spout
- Metal Lever Handle
- Two-Function Sprayhead with Volume Control: Stream and Spray
- Matching Soap Dispenser
- 1.8 gpm @ 60 psi

SHOWROOM PREFERRED

Marielle®
Single Handle Pull-Out Kitchen Faucet

LG532-7CC	Polished Chrome	3	$463
LG532-7SS	Stainless Steel	3	$493
LG532-7YY	Tuscan Bronze	3	$517

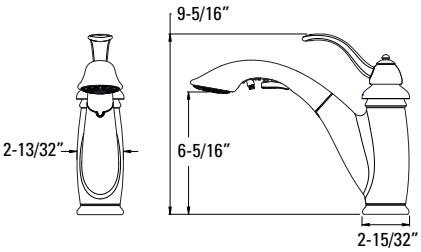

Holes: • 1 or 3-Hole 8" Installation

Features:
- Ceramic Disc Valve
- Metal Lever Handle
- 55" Stainless Steel Hose
- Single Post Mounting Ring and 3-Hole Deckplate Included
- Two-Function Sprayhead: Stream and Spray
- Swivel Spout
- 1.8 gpm @ 60 psi

CEC Compliant | Cal Green Compliant | NSF Lead-Free Certified | ADA Compliant | Accudock™

Arkitek™
Single Handle Pull-Out Kitchen Faucet

Model	Finish	Case Qty	List Price
LG534-LPMC	Polished Chrome	3	$199
LG534-LPMS	Stainless Steel	3	$235
LG534-LPMB	Matte Black	3	$325

Available Summer 2018

Technical Info

Holes: • 1 or 3-Hole 8" Installation

Features:
- Ceramic Disc Valve
- Metal Lever Handle
- Three-Function Sprayhead: Stream, Spray, and Pause
- Forward Only Handle Operation
- Single Post Mounting Ring and 3-Hole Deckplate Included
- 1.8 gpm @ 60 psi

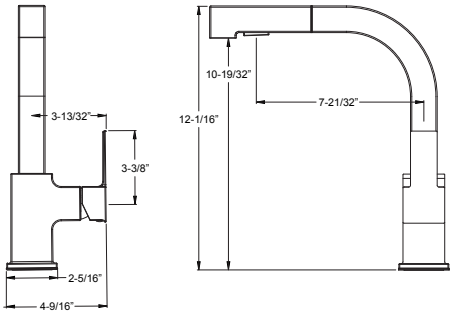

Parisa®
Single Handle Pull-Out Kitchen Faucet

LG534-7CC	Polished Chrome	3	$352
LG534-7SS	Stainless Stream	3	$422

Holes: • 1 or 3-Hole 8" Installation

Features:
- Ceramic Disc Valve
- Metal Lever Handle
- 55" Stainless Steel Hose
- Single Post Mounting Ring and 3-Hole Deckplate Included
- Two-Function Sprayhead: Stream and Spray
- Swivel Spout
- 1.8 gpm @ 60 psi

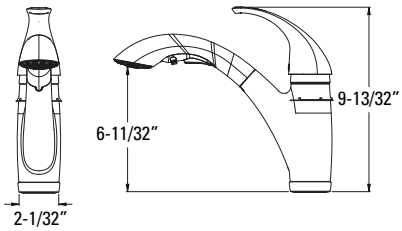

Clairmont™
Single Handle Pull-Out Kitchen Faucet

GT534-CMC	Polished Chrome	3	$281
GT534-CMS	Stainless Steel	3	$326

Holes: • 1 or 3-Hole 8" Installation

Features:
- Ceramic Disc Valve(s)
- Metal Lever Handle(s)
- 55" Braided Nylon Hose
- Single Post Mounting Ring and 3-Hole Deckplate Included
- One Touch Pull-Out Spray Activation
- Swivel Spout
- 1.8 gpm @ 60 psi

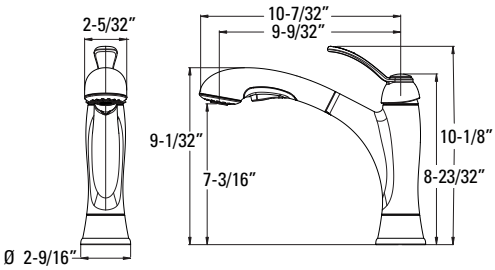

CEC Compliant | Cal Green Compliant | NSF Lead-Free Certified | ADA Compliant | Accudock™

SHOWROOM PREFERRED

Ashfield™
Single Handle Kitchen Faucet with Spray & Soap Dispenser

Model	Finish	Case Qty	List Price
LG26-4YPC	Polished Chrome	3	$418
LG26-4YPS	Stainless Steel	3	$511
LG26-4YPY	Tuscan Bronze	3	$550

Technical Info

Holes: • 3 or 4-Hole 4-10" Installation

Features:
- Ceramic Disc Valve
- Metal Lever Handle
- High Arc Swivel Spout
- Quick Connect Fittings
- Matching Side Spray and Soap Dispenser
- 1.8 gpm @ 60 psi

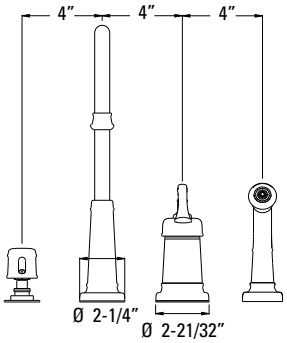

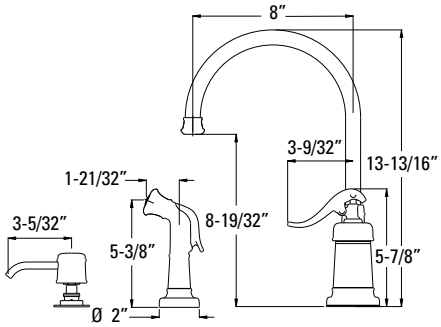

SHOWROOM PREFERRED

Marielle®
Single Handle Kitchen Faucet with Spray

LG26-3NCC	Polished Chrome	3	$421
LG26-3NSS	Stainless Steel	3	$501
LG26-3NYY	Tuscan Bronze	3	$618

Holes: • 3-Hole 4-10" Installation

Features:
- Ceramic Disc Valve
- Metal Lever Handle
- Matching Side Spray
- High Arc Swivel Spout
- Quick Connect Fittings
- 1.8 gpm @ 60 psi

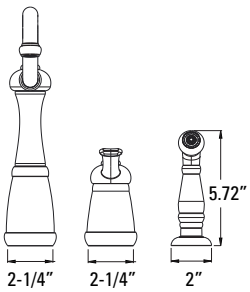

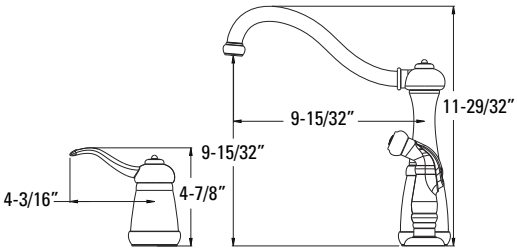

SHOWROOM PREFERRED

Marielle®
Single Handle Kitchen Faucet with Spray & Soap Dispenser

LG26-4NCC	Polished Chrome	3	$466
LG26-4NSS	Stainless Steel	3	$534
LG26-4NYY	Tuscan Bronze	3	$674
LG26-4NUU	Rustic Bronze	3	$648

Holes: • 3 or 4-Hole 4-10" Installation

Features:
- Ceramic Disc Valve
- Metal Lever Handle
- Matching Side Spray
- Matching Soap Dispenser
- High Arc Swivel Spout
- Quick Connect Fittings
- 1.8 gpm @ 60 psi

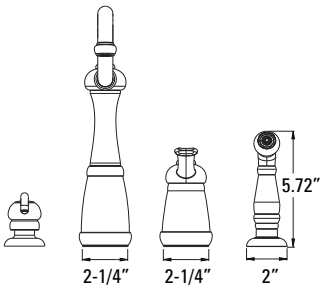

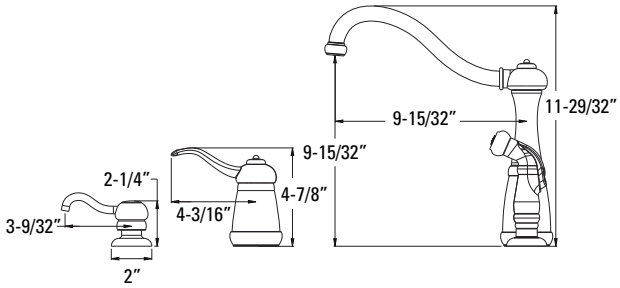

CEC Compliant | Cal Green Compliant | NSF Lead-Free Certified | ADA Compliant | Accudock™

Treviso™
Single Handle Kitchen Faucet with Spray & Soap Dispenser

Model	Finish	Case Qty	List Price
LG26-4DCC	Polished Chrome	3	$363
LG26-4DSS	Stainless Steel	3	$382
LG26-4DYY	Tuscan Bronze	3	$407

Technical Info

Holes: • 3 or 4-Hole 4-10" Installation

Features:
- Ceramic Disc Valve
- Metal Lever Handle
- High Arc Swivel Spout
- Quick Connect Fittings
- Matching Side Spray and Soap Dispenser
- 1.8 gpm @ 60 psi

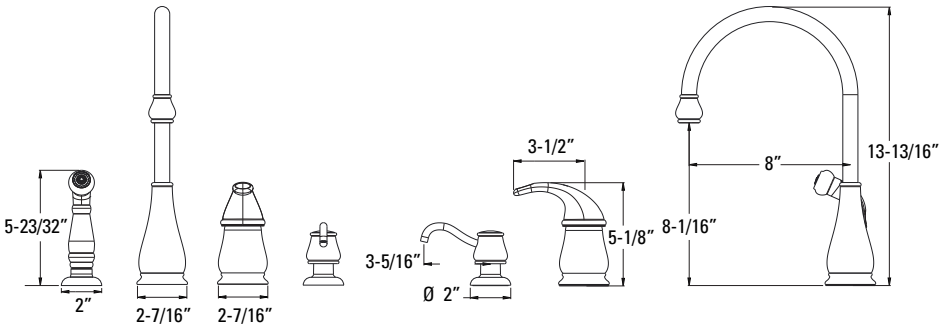

Avalon™
Single Handle Kitchen Faucet with Spray & Soap Dispenser

GT26-4CBC	Polished Chrome	3	$336
GT26-4CBS	Stainless Steel	3	$386
GT26-4CBY	Tuscan Bronze	3	$424

Holes: • 3 or 4-Hole 4-10" Installation

Features:
- Ceramic Disc Valve
- High Arc Swivel Spout
- Quick Connect Fittings
- Metal Lever Handle
- Matching Side Spray and Soap Dispenser
- 1.8 gpm @ 60 psi

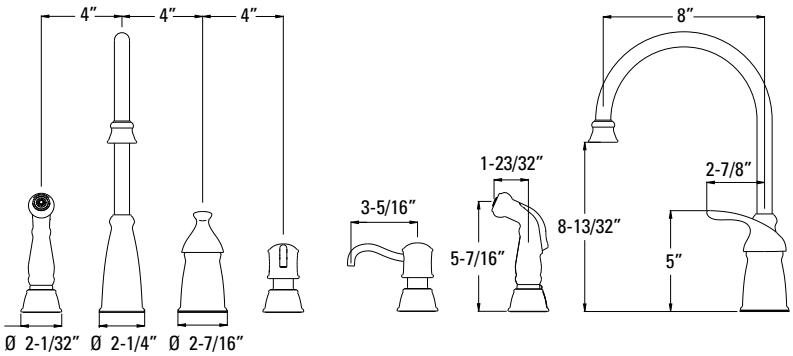

SHOWROOM PREFERRED

Marielle®
Single Handle Kitchen Faucet with Spray

GT34-4TCC	Polished Chrome	3	$259
GT34-4TSS	Stainless Steel	3	$299
GT34-4TYY	Tuscan Bronze	3	$402

Holes: • 2 or 4-Hole 8" Installation

Features:
- Ceramic Disc Valve
- Metal Lever Handle
- Matching Side Spray
- Swivel Spout
- Single Post Mounting Ring and 3-Hole Deckplate Included
- 1.8 gpm @ 60 psi

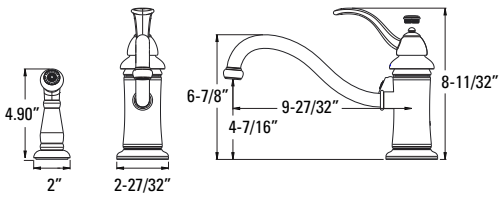

CEC Compliant | Cal Green Compliant | NSF Lead-Free Certified | ADA Compliant | Accudock™

SHOWROOM PREFERRED

Marielle®
Single Handle Kitchen Faucet with Spray & Soap Dispenser

Model	Finish	Case Qty	List Price
GT34-PTCC	Polished Chrome	3	$274
GT34-PTSS	Stainless Steel	3	$334
GT34-PTYY	Tuscan Bronze	3	$448

Technical Info

Holes: • 2 or 3-Hole Installation

Features:
- Ceramic Disc Valve
- Metal Lever Handle
- Matching Side Spray
- Matching Soap Dispenser
- Single Post Mounting Ring Included
- Swivel Spout
- 1.8 gpm @ 60 psi

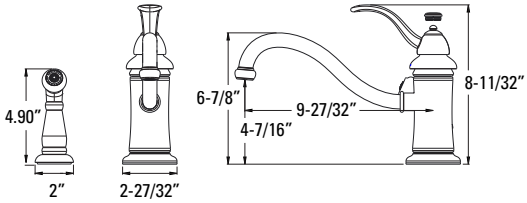

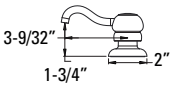

Portland™
Single Handle Kitchen Faucet

LG34-1PCØ	Polished Chrome	3	$144
LG34-1PSØ	Stainless Steel	3	$194
LG34-1PYØ	Tuscan Bronze	3	$239

Holes: • 1 or 3-Hole 8" Installation

Features:
- Ceramic Disc Valve
- Metal Lever Handle
- Single Post Mounting Ring and 3-Hole Deckplate Included
- Swivel Spout
- 1.8 gpm @ 60 psi

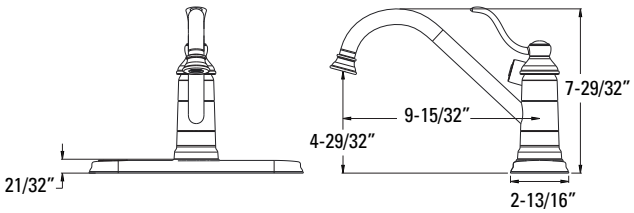

Portland™
Single Handle Kitchen Faucet with Spray

LG34-3PCØ	Polished Chrome	3	$167
LG34-3PSØ	Stainless Steel	3	$227
LG34-3PYØ	Tuscan Bronze	3	$281

Holes: • 3-Hole 8" Installation

Features:
- Ceramic Disc Valve
- Metal Lever Handle
- Matching Side Spray
- Swivel Spout
- 1.8 gpm @ 60 psi

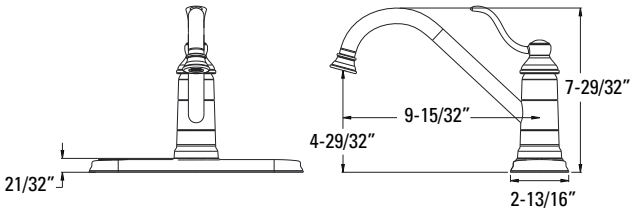

CEC Compliant | Cal Green Compliant | NSF Lead-Free Certified | ADA Compliant | Accudock™

Portland™
Single Handle Kitchen Faucet with Spray

Model	Finish	Case Qty	List Price
LG34-4PCØ	Polished Chrome	3	$167
LG34-4PSØ	Stainless Steel	3	$229
LG34-4PYØ	Tuscan Bronze	3	$281

Technical Info

Holes: • 2 or 4-Hole 8" Installation

Features:
- Ceramic Disc Valve
- Metal Lever Handle
- Single Post Mounting Ring and 3-Hole Deckplate Included
- Matching Side Spray
- Swivel Spout
- 1.8 gpm @ 60 psi

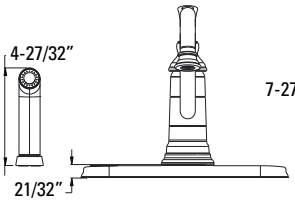

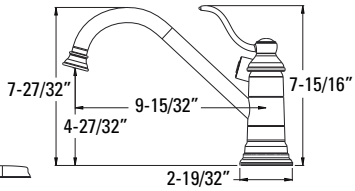

Treviso™
Two Handle Kitchen Faucet with Spray

GT36-4DCC	Polished Chrome	3	$271
GT36-4DSS	Stainless Steel	3	$329

Holes: • 4-Hole 8" Installation

Features:
- Ceramic Disc Valves
- Metal Lever Handles
- High Arc Swivel Spout
- Matching Side Spray
- 1.8 gpm @ 60 psi

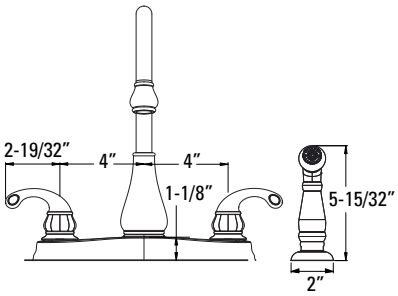

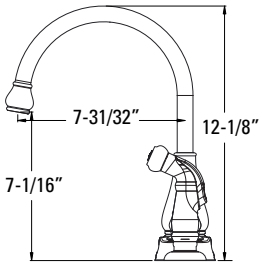

Avalon™
Two Handle Kitchen Faucet with Spray

GT36-4CBC	Polished Chrome	3	$257
GT36-4CBS	Stainless Steel	3	$342

Holes: • 4-Hole 8" Installation

Features:
- Ceramic Disc Valves
- High Arc Swivel Spout
- Metal Lever Handles
- Matching Side Spray
- 1.8 gpm @ 60 psi

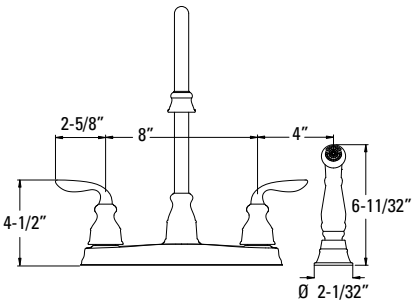

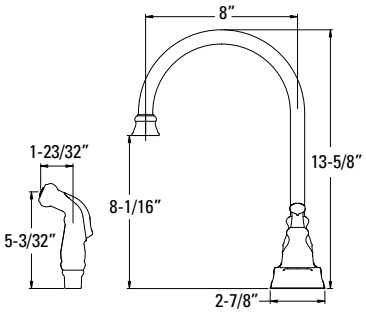

CEC Compliant | Cal Green Compliant | NSF Lead-Free Certified | ADA Compliant | Accudock™

SHOWROOM PREFERRED

Lita™
Single Handle Pull-Down Prep Faucet

Model	Finish	Case Qty	List Price
GT72-SMCC	Polished Chrome	3	$368
GT72-SMSS	Stainless Steel	3	$420

Technical Info

Holes: • 1 or 3-Hole 8" Installation

Features:
- Metal AccuDock™ Sprayhead
- Ceramic Disc Valve
- High Arc Pull-Down Swivel Spout
- Metal Lever Handle
- Three-Function Sprayhead: Stream, Spray, and Pause
- Forward Only Handle Operation
- Single Post Mounting Ring and 3-Hole Deckplate Included
- Coordinating Soap Pump Available in Kitchen Accessories
- Integrated Nylon Braided Supply Lines with 3/8" Threaded Compression Fittings
- 1.8 gpm @ 60 psi

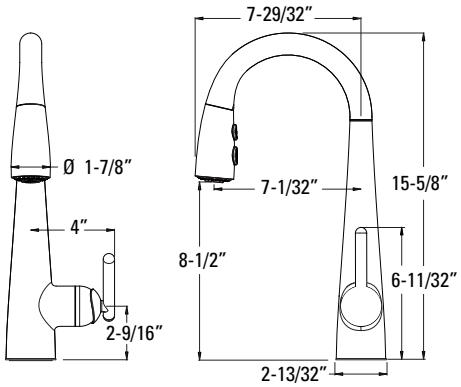

SHOWROOM PREFERRED

Ashfield™
Single Handle Bar & Prep Faucet

LG72-YP2C	Polished Chrome	3	$258
LG72-YP2K	Brushed Nickel	3	$310
LG72-YP2Y	Tuscan Bronze	3	$342

Holes: • 2-Hole Installation

Features:
- Ceramic Disc Valve
- Metal Lever Handle
- High Arc Swivel Spout
- 1.8 gpm @ 60 psi

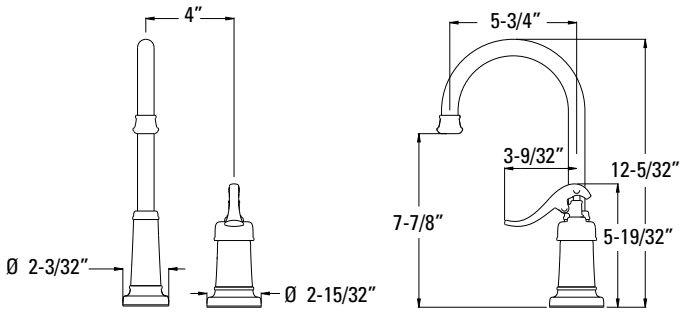

Stellen™
Single Handle Bar Kitchen Faucet

LG572-SAC	Polished Chrome	3	$223
LG572-SAS	Stainless Steel	3	$275
LG572-SAB	Matte Black	3	$342

Holes: • 1 or 3-Hole 8" Installation

Features:
- AccuDock™ Sprayhead
- Ceramic Disc Valve
- High Arc Pull-Down Swivel Spout
- Metal Lever Handle
- Three-Function Sprayhead: Stream, Spray, and Pause
- Forward Only Handle Operation
- Single Post Mounting Ring and 3-Hole Deckplate Included
- 1.8 gpm @ 60 psi

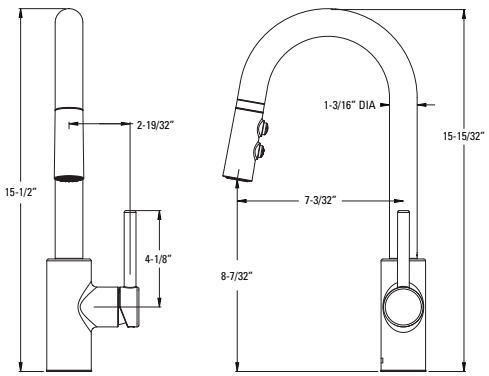

CEC Compliant | Cal Green Compliant | NSF Lead-Free Certified | ADA Compliant | Accudock™

SHOWROOM PREFERRED

Marielle®
Single Handle Bar & Prep Faucet

Model	Finish	Case Qty	List Price
GT72-M1CC	Polished Chrome	3	$256
GT72-M1SS	Stainless Steel	3	$325
GT72-M1YY	Tuscan Bronze	3	$366
GT72-M1UU	Rustic Bronze	3	$359

Technical Info

Holes: • 1 or 3-Hole 4" Installation

Features:
- Ceramic Disc Valve
- Metal Lever Handle
- 360 Degree Swivel Spout
- Single Post Mounting Ring and 3-Hole Deckplate Included
- 1.8 gpm @ 60 psi

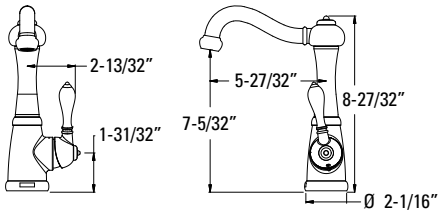

SHOWROOM PREFERRED

Port Haven™
Wall Mount Pot Filler

GT533-TDC	Polished Chrome	3	$538
GT533-TDS	Stainless Steel	3	$600
GT533-TDD	Polished Nickel	3	$600
GT533-TDY	Tuscan Bronze	3	$641

Holes: • 1-Hole Installation

Features:
- Ceramic Disc Valves
- Metal Lever Handles
- Dual Handle Shut Off
- 3.0 gpm @ 60 psi

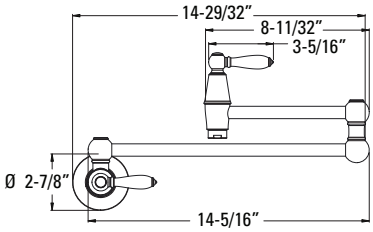

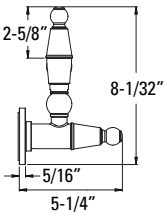

SHOWROOM PREFERRED

Lita™
Wall Mount Pot Filler

GT533-PFC	Polished Chrome	3	$538
GT533-PFS	Stainless Steel	3	$600
GT533-PFY	Tuscan Bronze	3	$641

Holes: • 1-Hole Installation

Features:
- Ceramic Disc Valves
- Metal Lever Handles
- Full Rotation
- Dual Handle Shut Off
- 3.0 gpm @ 60 psi

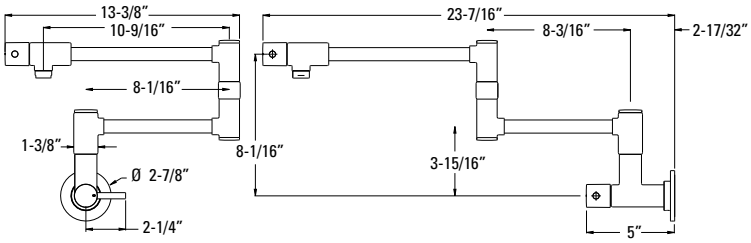

SHOWROOM PREFERRED

Laundry
Wall Mount Laundry Faucet

Ø69-Ø2ØØ	Unpolished Chrome	1	$98.00

Holes: • 2-Hole Installation

Features:
- Compression Valves
- Variable Two-Hole Installation From 4" to 9 3/8"
- Metal Blade Handles
- 1/2" IP Inlets
- 3/4" Hose Fitting Spout
- Swivel Spout

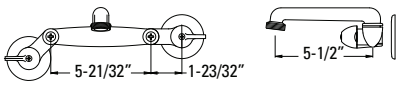

CEC Compliant | Cal Green Compliant | NSF Lead-Free Certified | ADA Compliant | Accudock™

SHOWROOM PREFERRED

Kai™
Soap Dispenser Kit

Model	Finish	Case Qty	List Price
KSD-IHCC	Polished Chrome	3	$171
KSD-IHSS	Stainless Steel	3	$192
KSD-IHBB	Matte Black	3	$206

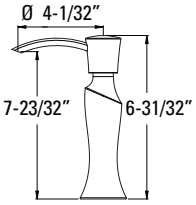

Technical Info

Holes: • 1-Hole

Features:
- Easy Above Counter Refill
- Anti-Residue Design Prevents Soap/Lotion Buildup
- Finishes Match Pfister Faucets
- All Brass Construction
- Brass Shank

SHOWROOM PREFERRED

Lita™
Soap Dispenser Kit

92Ø-124A	Polished Chrome	1	$91
92Ø-124S	Stainless Steel	1	$90
92Ø-124D	Polished Nickel	1	$93
92Ø-124B	Matte Black	1	$107

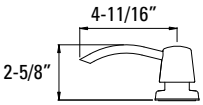

Holes: • 1-Hole

Features:
- Easy Above Counter Refill
- Anti-Residue Design Prevents Soap/Lotion Buildup
- Finishes Match Pfister Faucets
- All Metal Construction

SHOWROOM PREFERRED

Marielle®
Soap Dispenser Kit

KSD-M1CC	Polished Chrome	1	$76
KSD-M1SS	Stainless Steel	1	$98
KSD-M1YY	Tuscan Bronze	1	$106
KSD-M1UU	Rustic Bronze	1	$112

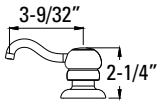

Holes: • 1-Hole

Features:
- Easy Above Counter Refill
- Anti-Residue Design Prevents Soap/Lotion Buildup
- Finishes Match Pfister Faucets

SHOWROOM PREFERRED

Contemporary
Soap Dispenser Kit

KSD-K1CC	Polished Chrome	3	$76
KSD-K1SS	Stainless Steel	3	$98

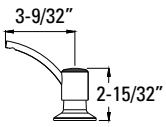

Holes: • 1-Hole

Features:
- Easy Above Counter Refill
- Anti-Residue Design Prevents Soap/Lotion Buildup
- Finishes Match Pfister Faucets

SHOWROOM PREFERRED

Mystique™ Soap Dispenser Kit

Model	Finish	Case Qty	List Price
KSD-LCCC	Polished Chrome	3	$35
KSD-LCWW	White	3	$38
KSD-LCSS	Stainless Steel	3	$41

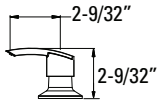

Technical Info

Holes: • 1-Hole

Features:
- Easy Above Counter Refill
- Anti-Residue Design Prevents Soap/Lotion Buildup
- Finishes Match Pfister Faucets

Air Gap Kit

Model	Finish	Case Qty	List Price
KAG-K1CC	Polished Chrome	3	$20
KAG-K1SS	Stainless Steel	3	$25
KAG-K1KK	Brushed Nickel	3	$23
KAG-K1DD	Polished Nickel	3	$37
KAG-K1BK	Matte Black	3	$37
KAG-K1YY	Tuscan Bronze	3	$37

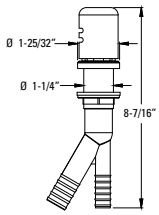

Holes: • 1-Hole

Features:
- Metal Cap
- Finishes Match Pfister Faucets

BATH

Bath Reference Guide 20
Free-Standing Tub Fillers 37

COLLECTIONS

Rhen™ 44
Kenzo™ 60
Ashfield® 76
Arterra™ 86
Marielle® 96
Contempra® 104
Deckard™ 114
Northcott™ 122
Bronson™ 130
Saxton™ 138
Avalon™ 146
Arkitek™ 154
Serrano™ 162
Weller™ 170
Parisa® 178

TUB & SHOWER

Extension Kits 183
Multi-Handle Tub & Shower 187
Showerheads, Handhelds,
& Components 197
1/2" Thermostatic Shower System 225
3/4" Thermostatic Shower System 233

Bath Accessories 241

Single Control Vessel Faucets

SHOWROOM PREFERRED

Kenzo™
Single Control Vessel Lavatory

Model	Finish	Case Qty	List Price
LG4Ø-DF1C	Polished Chrome	3	$382
LG4Ø-DF1K	Brushed Nickel	3	$526
LG4Ø-DF1B	Matte Black	3	$535

SHOWROOM PREFERRED

Kenzo™
Single Control Vessel Lavatory Trough

Model	Finish	Case Qty	List Price
LG4Ø-DFØC	Polished Chrome	3	$403
LG4Ø-DFØK	Brushed Nickel	3	$548
LG4Ø-DFØB	Matte Black	3	$558

Ashfield™
Single Control Vessel Lavatory

Model	Finish	Case Qty	List Price
LG4Ø-YPØC	Polished Chrome	3	$390
LG4Ø-YPØK	Brushed Nickel	3	$445
LG4Ø-YPØY	Tuscan Bronze	3	$473
LG4Ø-YPØU	Rustic Bronze	3	$467

SHOWROOM PREFERRED

Arterra™
Single Control Vessel Lavatory

Model	Finish	Case Qty	List Price
LG4Ø-DEØC	Polished Chrome	3	$327
LG4Ø-DEØK	Brushed Nickel	3	$440
LG4Ø-DEØD	Polished Nickel	3	$440
LG4Ø-DEØY	Tuscan Bronze	3	$451

SHOWROOM PREFERRED

Contempra®
Single Control Vessel Lavatory

Model	Finish	Case Qty	List Price
LG4Ø-NCØØ	Polished Chrome	3	$335
LG4Ø-NKØØ	Brushed Nickel	3	$446
LG4Ø-NBØØ	Matte Black	3	$502
LG4Ø-NBGØØ	Brushed Gold	3	$608

Single Control Lavatory Faucets

SHOWROOM PREFERRED

Rhen™
Single Control Lavatory

Model	Finish	Case Qty	List Price
LG42-RH1C	Polished Chrome	3	$325
LG42-RH1K	Brushed Nickel	3	$455
LG42-RH1B	Matte Black	3	$465
LG42-RH1BG	Brushed Gold	3	$475

SHOWROOM PREFERRED

Kenzo™
Single Control Lavatory

Model	Finish	Case Qty	List Price
LG42-DF1C	Polished Chrome	3	$313
LG42-DF1K	Brushed Nickel	3	$452
LG42-DF1B	Matte Black	3	$460

SHOWROOM PREFERRED

Kenzo™
Single Control Lavatory Trough

Model	Finish	Case Qty	List Price
LG42-DFØC	Polished Chrome	3	$337
LG42-DFØK	Brushed Nickel	3	$471
LG42-DFØB	Matte Black	3	$482

SHOWROOM PREFERRED

Ashfield™
Single Control Lavatory

Model	Finish	Case Qty	List Price
LG42-YPØC	Polished Chrome	3	$292
LG42-YPØK	Brushed Nickel	3	$378
LG42-YPØY	Tuscan Bronze	3	$416
LG42-YPØU	Rustic Bronze	3	$404

SHOWROOM PREFERRED

Arterra™
Single Control Lavatory

Model	Finish	Case Qty	List Price
LG42-DEØC	Polished Chrome	3	$255
LG42-DEØK	Brushed Nickel	3	$358
LG42-DEØD	Polished Nickel	3	$358
LG42-DEØY	Tuscan Bronze	3	$378

SHOWROOM PREFERRED

Contempra®
Single Control Lavatory

Model	Finish	Case Qty	List Price
LG42-NCØØ	Polished Chrome	3	$261
LG42-NKØØ	Brushed Nickel	3	$372
LG42-NBØØ	Matte Black	3	$392
LG42-NBGØØ	Brushed Gold	3	$475

CEC Compliant · Cal Green Compliant · Meets EPA WaterSense℠ Standards · NSF Lead-Free Certified · ADA Compliant · UltraSeal™ · SecurePfit™

Single Control Lavatory Faucets

Deckard™
Single Control Lavatory

Model	Finish	Case Qty	List Price
LG42-DAØC	Polished Chrome	3	$207
LG42-DAØK	Brushed Nickel	3	$275
LG42-DAØB	Matte Black	3	$321

Northcott™
Single Control Lavatory

Model	Finish	Case Qty	List Price
LG42-MGØC	Polished Chrome	3	$207
LG42-MGØK	Brushed Nickel	3	$275
LG42-MGØY	Tuscan Bronze	3	$321

Avalon™
Single Control Lavatory

Model	Finish	Case Qty	List Price
LG42-CB1C	Polished Chrome	3	$166
LG42-CB1K	Brushed Nickel	3	$197
LG42-CB1Y	Tuscan Bronze	3	$223

Arkitek™
Single Control Lavatory

Model	Finish	Case Qty	List Price
LG42-LPMC	Polished Chrome	3	$166
LG42-LPMK	Brushed Nickel	3	$197

Serrano™
Single Control Lavatory

Model	Finish	Case Qty	List Price
LG42-SRØC	Polished Chrome	3	$135
LG42-SRØK	Brushed Nickel	3	$166
LG42-SRØY	Tuscan Bronze	3	$192
LG42-SR5C	Polished Chrome	3	$125

• SR5C = 50/50 Pop-Up

Weller™
Single Control Lavatory

Model	Finish	Case Qty	List Price
LG42-WRØC	Polished Chrome	3	$135
LG42-WRØK	Brushed Nickel	3	$166
LG42-WRØY	Tuscan Bronze	3	$192

Parisa®
Single Control Lavatory

Model	Finish	Case Qty	List Price
LG42-AMCC	Polished Chrome	3	$137
LG42-AMCK	Brushed Nickel	3	$193
LG42-ANCC	Polished Chrome	3	$125

• ANCC = Less Drain Assembly

Bath Reference

4" Centerset Lavatory Faucets

SHOWROOM PREFERRED

Marielle®
4" Centerset/Mini-Widespread Lavatory

Model	Finish	Case Qty	List Price
LG46-MØBC	Polished Chrome	3	$288
LG46-MØBK	Brushed Nickel	3	$386
LG46-MØBD	Polished Nickel	3	$386
LG46-MØBY	Tuscan Bronze	3	$414

Northcott™
4" Centerset Lavatory

Model	Finish	Case Qty	List Price
LG48-MGØC	Polished Chrome	3	$202
LG48-MGØK	Brushed Nickel	3	$270
LG48-MGØY	Tuscan Bronze	3	$311

Bronson™
4" Centerset Lavatory

Model	Finish	Case Qty	List Price
LG48-BSØC	Polished Chrome	3	$202
LG48-BSØK	Brushed Nickel	3	$270
LG48-BSØY	Tuscan Bronze	3	$311

Saxton™
4" Centerset Lavatory

Model	Finish	Case Qty	List Price
LG48-GLØC	Polished Chrome	3	$156
LG48-GLØK	Brushed Nickel	3	$187
LG48-GLØY	Tuscan Bronze	3	$213

CEC Compliant · Cal Green Compliant · Meets EPA WaterSense℠ Standards · NSF Lead-Free Certified · ADA Compliant · UltraSeal™ · SecurePfit™

4" Centerset Lavatory Faucets

Avalon™
4" Centerset Lavatory

Model	Finish	Case Qty	List Price
LG48-CB1C	Polished Chrome	3	$156
LG48-CB1K	Brushed Nickel	3	$187
LG48-CB1Y	Tuscan Bronze	3	$213

Weller™
4" Centerset Lavatory

Model	Finish	Case Qty	List Price
LG48-WRØC	Polished Chrome	3	$120
LG48-WRØK	Brushed Nickel	3	$140
LG48-WRØY	Tuscan Bronze	3	$166

Serrano™
4" Centerset Lavatory

Model	Finish	Case Qty	List Price
LG48-SRØC	Polished Chrome	3	$120
LG48-SRØK	Brushed Nickel	3	$140
LG48-SRØY	Tuscan Bronze	3	$166
LG48-SR5C	Polished Chrome	3	$107

• SR5C = 50/50 Pop-Up

Bath Reference

8" Wall Mount Lavatory Faucets

SHOWROOM PREFERRED

Rhen™
8" Wall Mount Lavatory

Model	Finish	Case Qty	List Price
LG49-RH2C	Polished Chrome	3	$325
LG49-RH2K	Brushed Nickel	3	$515
LG49-RH2B	Matte Black	3	$520
LG49-RH2BG	Brushed Gold	3	$530

SHOWROOM PREFERRED

Kenzo™
8" Wall Mount Lavatory Trough

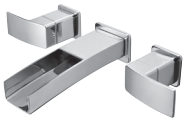

Model	Finish	Case Qty	List Price
LG49-DF1C	Polished Chrome	3	$337
LG49-DF1K	Brushed Nickel	3	$534
LG49-DF1B	Matte Black	3	$539

SHOWROOM PREFERRED

Kenzo™
8" Wall Mount Lavatory

Model	Finish	Case Qty	List Price
LG49-DF3C	Polished Chrome	3	$328
LG49-DF3K	Brushed Nickel	3	$518
LG49-DF3B	Matte Black	3	$527

CEC Compliant · Cal Green Compliant · Meets EPA WaterSense℠ Standards · NSF Lead-Free Certified · ADA Compliant · UltraSeal™ · SecurePfit™

8" Widespread Lavatory Faucets

SHOWROOM PREFERRED

Rhen™
8" Widespread Lavatory

Model	Finish	Case Qty	List Price
LG49-RH1C	Polished Chrome	3	$435
LG49-RH1K	Brushed Nickel	3	$620
LG49-RH1B	Matte Black	3	$625
LG49-RH1BG	Brushed Gold	3	$635

SHOWROOM PREFERRED

Kenzo™
8" Widespread Lavatory

LG49-DF2C	Polished Chrome	3	$431
LG49-DF2K	Brushed Nickel	3	$620
LG49-DF2B	Matte Black	3	$632

SHOWROOM PREFERRED

Kenzo™
8" Widespread Lavatory Trough

LG49-DFØC	Polished Chrome	3	$451
LG49-DFØK	Brushed Nickel	3	$642
LG49-DFØB	Matte Black	3	$647

SHOWROOM PREFERRED

Ashfield™
8" Widespread Lavatory

LG49-YP1C	Polished Chrome	3	$416
LG49-YP1K	Brushed Nickel	3	$508
LG49-YP1Y	Tuscan Bronze	3	$569
LG49-YP1U	Rustic Bronze	3	$560

SHOWROOM PREFERRED

Arterra™
8" Widespread Lavatory

LG49-DEØC	Polished Chrome	3	$341
LG49-DEØK	Brushed Nickel	3	$430
LG49-DEØD	Polished Nickel	3	$430
LG49-DEØY	Tuscan Bronze	3	$476

SHOWROOM PREFERRED

Marielle®
8" Widespread Lavatory

LG49-MØBC	Polished Chrome	3	$394
LG49-MØBK	Brushed Nickel	3	$509
LG49-MØBD	Polished Nickel	3	$509
LG49-MØBY	Tuscan Bronze	3	$541

SHOWROOM PREFERRED

Contempra®
8" Widespread Lavatory

Model	Finish	Case Qty	List Price
LG49-NC1C	Polished Chrome	3	$332
LG49-NC1K	Brushed Nickel	3	$386
LG49-NC1B	Matte Black	3	$497
LG49-NC1BG	Brushed Gold	3	$603

Deckard™
8" Widespread Lavatory

LG49-DAØC	Polished Chrome	3	$290
LG49-DAØK	Brushed Nickel	3	$342
LG49-DAØB	Matte Black	3	$383

Northcott™
8" Widespread Lavatory

LG49-MGØC	Polished Chrome	3	$290
LG49-MGØK	Brushed Nickel	3	$342
LG49-MGØY	Tuscan Bronze	3	$383

Bronson™
8" Widespread Lavatory

LG49-BSØC	Polished Chrome	3	$290
LG49-BSØK	Brushed Nickel	3	$342
LG49-BSØY	Tuscan Bronze	3	$383

Saxton™
8" Widespread Lavatory

LG49-GLØC	Polished Chrome	3	$239
LG49-GLØK	Brushed Nickel	3	$259
LG49-GLØY	Tuscan Bronze	3	$337

Avalon™
8" Widespread Lavatory

LG49-CB1C	Polished Chrome	3	$239
LG49-CB1K	Brushed Nickel	3	$259
LG49-CB1Y	Tuscan Bronze	3	$337

Bath Reference

CEC Compliant | Cal Green Compliant | Meets EPA WaterSense℠ Standards | NSF Lead-Free Certified | ADA Compliant | UltraSeal™ | SecurePfit™

8" Widespread Lavatory Faucets

	Model	Finish	Case Qty	List Price
Arkitek™ 8" Widespread Lavatory	LG49-LPMC	Polished Chrome	3	$239
	LG49-LPMK	Brushed Nickel	3	$259

	Model	Finish	Case Qty	List Price
Serrano™ 8" Widespread Lavatory	LG49-SRØC	Polished Chrome	3	$197
	LG49-SRØK	Brushed Nickel	3	$233
	LG49-SRØY	Tuscan Bronze	3	$285

	Model	Finish	Case Qty	List Price
Weller™ 8" Widespread Lavatory	LG49-WRØC	Polished Chrome	3	$197
	LG49-WRØK	Brushed Nickel	3	$233
	LG49-WRØY	Tuscan Bronze	3	$285

Grid Strainers

SHOWROOM PREFERRED	Model	Finish	Case Qty	List Price
With Overflow	T47-9GSC	Polished Chrome	6	$44
	T47-9GSK	Brushed Nickel	6	$50
	T47-9GSD	Polished Nickel	6	$50
	T47-9GSB	Matte Black	6	$57
	T47-9GSY	Tuscan Bronze	6	$56
	T47-9GSU	Rustic Bronze	6	$62
	T47-9GSBG	Brushed Gold	6	$76

SHOWROOM PREFERRED	Model	Finish	Case Qty	List Price
Without Overflow	T47-7GLC	Polished Chrome	6	$44
	T47-7GLK	Brushed Nickel	6	$50
	T47-7GLD	Polished Nickel	6	$50
	T47-7GLB	Matte Black	6	$57
	T47-7GLY	Tuscan Bronze	6	$56
	T47-7GLU	Rustic Bronze	6	$62
	T47-7GLBG	Brushed Gold	6	$76

Pop-Up Assemblies

	Model	Finish	Case Qty	List Price
All Metal Pop-Up	972-Ø22A	Polished Chrome	1	$38
	972-Ø22J	Brushed Nickel	1	$41
	972-Ø22B	Matte Black	1	$45
	972-Ø22Y	Tuscan Bronze	1	$45
	972-Ø22U	Rustic Bronze	1	$47
	972-Ø22BG	Brushed Gold	1	$47

	Model	Finish	Case Qty	List Price
All Metal Push & Seal™	972-101A	Polished Chrome	1	$57
	972-101J	Brushed Nickel	1	$62
	972-101B	Matte Black	1	$68
	972-101Y	Tuscan Bronze	1	$62
	972-101U	Rustic Bronze	1	$68
	972-101BG	Brushed Gold	1	$71

	Model	Finish	Case Qty	List Price
Push & Seal™	972-Ø53A	Polished Chrome	1	$19
	972-Ø53J	Brushed Nickel	1	$25
	972-Ø53B	Matte Black	1	$40
	972-Ø53Y	Tuscan Bronze	1	$32
	972-Ø53U	Rustic Bronze	1	$40

CEC Compliant · Cal Green Compliant · Meets EPA WaterSense℠ Standards · NSF Lead-Free Certified · ADA Compliant · UltraSeal™ · SecurePfit™

1-Hole Roman Tub Trim

Deckard™
1-Hole Roman Tub

Model	Finish	Case Qty	List Price
RT6-1DAC	Polished Chrome	3	$466
RT6-1DAK	Brushed Nickel	3	$570
RT6-1DAB	Matte Black	3	$673

2-Hole Roman Tub Trim

Deckard™
2-Hole Roman Tub

Model	Finish	Case Qty	List Price
RT6-2DAC	Polished Chrome	3	$570
RT6-2DAK	Brushed Nickel	3	$673
RT6-2DAB	Matte Black	3	$725

Hand Shower 1.8 gpm @ 80 psi

3-Hole Roman Tub Trims

SHOWROOM PREFERRED

Rhen™
3-Hole Roman Tub

Model	Finish	Case Qty	List Price
RT6-5RHC	Polished Chrome	3	$520
RT6-5RHK	Brushed Nickel	3	$675
RT6-5RHB	Matte Black	3	$685
RT6-5RHBG	Brushed Gold	3	$700

SHOWROOM PREFERRED

Ashfield™
3-Hole Roman Tub

Model	Finish	Case Qty	List Price
RT6-5YPC	Polished Chrome	3	$583
RT6-5YPK	Brushed Nickel	3	$767
RT6-5YPY	Tuscan Bronze	3	$813
RT6-5YPU	Rustic Bronze	3	$806

SHOWROOM PREFERRED

Kenzo™
3-Hole Roman Tub

RT6-5D1C	Polished Chrome	3	$523
RT6-5D1K	Brushed Nickel	3	$689
RT6-5D1B	Matte Black	3	$701

SHOWROOM PREFERRED

Arterra™
3-Hole Roman Tub

RT6-5DEC	Polished Chrome	3	$393
RT6-5DEK	Brushed Nickel	3	$486
RT6-5DED	Polished Nickel	3	$486
RT6-5DEY	Tuscan Bronze	3	$527

SHOWROOM PREFERRED

Kenzo™
3-Hole Roman Tub
Trough

RT6-5DFC	Polished Chrome	3	$539
RT6-5DFK	Brushed Nickel	3	$699
RT6-5DFB	Matte Black	3	$709

SHOWROOM PREFERRED

Marielle®
3-Hole Roman Tub

RT6-5MXC	Polished Chrome	3	$339
RT6-5MXK	Brushed Nickel	3	$505
RT6-5MXD	Polished Nickel	3	$505
RT6-5MXY	Tuscan Bronze	3	$572

CEC Compliant · Cal Green Compliant · Meets EPA WaterSense℠ Standards · NSF Lead-Free Certified · ADA Compliant · UltraSeal™ · SecurePfit™

3-Hole Roman Tub Trims

SHOWROOM PREFERRED

Contempra®
3-Hole Roman Tub

Model	Finish	Case Qty	List Price
RT6-5NCC	Polished Chrome	3	$341
RT6-5NCK	Brushed Nickel	3	$489
RT6-5NCB	Matte Black	3	$512
RT6-5NCBG	Brushed Gold	3	$619

Deckard™
3-Hole Roman Tub

Model	Finish	Case Qty	List Price
RT6-5DAC	Polished Chrome	3	$306
RT6-5DAK	Brushed Nickel	3	$404
RT6-5DAB	Matte Black	3	$435

Northcott™
3-Hole Roman Tub

Model	Finish	Case Qty	List Price
RT6-5MGC	Polished Chrome	3	$306
RT6-5MGK	Brushed Nickel	3	$404
RT6-5MGY	Tuscan Bronze	3	$435

Bronson™
3-Hole Roman Tub

Model	Finish	Case Qty	List Price
RT6-5BSC	Polished Chrome	3	$306
RT6-5BSK	Brushed Nickel	3	$404
RT6-5BSY	Tuscan Bronze	3	$435

Saxton™
3-Hole Roman Tub

Model	Finish	Case Qty	List Price
RT6-5GLC	Polished Chrome	3	$213
RT6-5GLK	Brushed Nickel	3	$259
RT6-5GLY	Tuscan Bronze	3	$337

Avalon™
3-Hole Roman Tub

Model	Finish	Case Qty	List Price
RT6-5CB1C	Polished Chrome	3	$213
RT6-5CB1K	Brushed Nickel	3	$259
RT6-5CB1Y	Tuscan Bronze	3	$337

Arkitek™
3-Hole Roman Tub

Model	Finish	Case Qty	List Price
RT6-5LPMC	Polished Chrome	3	$213
RT6-5LPMK	Brushed Nickel	3	$259

Serrano™
3-Hole Roman Tub

Model	Finish	Case Qty	List Price
RT6-5SRC	Polished Chrome	3	$187
RT6-5SRK	Brushed Nickel	3	$223
RT6-5SRY	Tuscan Bronze	3	$275

Weller™
3-Hole Roman Tub

Model	Finish	Case Qty	List Price
RT6-5WRC	Polished Chrome	3	$187
RT6-5WRK	Brushed Nickel	3	$223
RT6-5WRY	Tuscan Bronze	3	$275

Handle Kits

HHL - Roman Tub Handles (Sold in Pairs)

SHOWROOM PREFERRED

Ashfield™

Model	Finish	Case Qty	List Price
HHL-YPLC	Polished Chrome	16	$78
HHL-YPLK	Brushed Nickel	16	$97
HHL-YPLY	Tuscan Bronze	16	$116
HHL-YPLU	Rustic Bronze	16	$107

SHOWROOM PREFERRED

Marielle®

Model	Finish	Case Qty	List Price
HHL-MØBC	Polished Chrome	16	$65
HHL-MØBK	Brushed Nickel	16	$99
HHL-MØBD	Polished Nickel	16	$99
HHL-MØBY	Tuscan Bronze	16	$115

CEC Compliant · Cal Green Compliant · Meets EPA WaterSense℠ Standards · NSF Lead-Free Certified · ADA Compliant · UltraSeal™ · SecurePfit™

Bath Reference

SHOWROOM PREFERRED

Rhen™
4-Hole Roman Tub Trim with Hand Shower

Model	Finish	Case Qty	List Price
LG6-4RHC	Polished Chrome	3	$590
LG6-4RHK	Brushed Nickel	3	$850
LG6-4RHB	Matte Black	3	$865
LG6-4RHBG	Brushed Gold	3	$895

Hand Shower 1.8 gpm @ 80 psi

SHOWROOM PREFERRED

Kenzo™
4-Hole Roman Tub with Hand Shower

Model	Finish	Case Qty	List Price
LG6-4D1C	Polished Chrome	3	$590
LG6-4D1K	Brushed Nickel	3	$867
LG6-4D1B	Matte Black	3	$882

Hand Shower 1.8 gpm @ 80 psi

SHOWROOM PREFERRED

Kenzo™
4-Hole Roman Tub Trough with Hand Shower

Model	Finish	Case Qty	List Price
LG6-4DFC	Polished Chrome	3	$896
LG6-4DFK	Brushed Nickel	3	$611
LG6-4DFB	Matte Black	3	$880

Hand Shower 1.8 gpm @ 80 psi

SHOWROOM PREFERRED

Arterra™
4-Hole Roman Tub Trim with Hand Shower

Model	Finish	Case Qty	List Price
LG6-4DEC	Polished Chrome	3	$507
LG6-4DEK	Brushed Nickel	3	$589
LG6-4DED	Polished Nickel	3	$589
LG6-4DEY	Tuscan Bronze	3	$631

Hand Shower 1.8 gpm @ 80 psi

Saxton™
4-Hole Roman Tub Trim with Hand Shower

Model	Finish	Case Qty	List Price
LG6-4GLC	Polished Chrome	3	$441
LG6-4GLK	Brushed Nickel	3	$561
LG6-4GLY	Tuscan Bronze	3	$628

Hand Shower 1.8 gpm @ 80 psi

SHOWROOM PREFERRED

Rhen™
Single Hole
Free-Standing Tub Filler
with Hand Shower

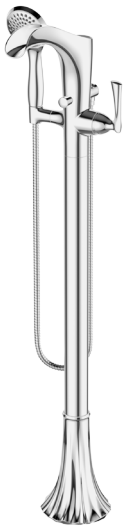

Model	Finish	Case Qty	List Price
LG6-1RHC	Polished Chrome	1	$1,515
LG6-1RHK	Brushed Nickel	1	$1,648
LG6-1RHB	Matte Black	1	$1,778
LG6-1RHBG	Brushed Gold	1	$1,924

Hand Shower 1.8 gpm @ 80 psi

SHOWROOM PREFERRED

Modern Single Hole
Free-Standing Tub Filler
with Hand Shower

Model	Finish	Case Qty	List Price
LG6-1MFC	Polished Chrome	1	$827
LG6-1MFK	Brushed Nickel	1	$1,010
LG6-1MFD	Polished Nickel	1	$1,010
LG6-1MFY	Tuscan Bronze	1	$1,087

Hand Shower 1.8 gpm @ 80 psi

SHOWROOM PREFERRED

Traditional Double Riser
Free-Standing Tub Filler
with Hand Shower

LG6-1TFC	Polished Chrome	1	$1,034
LG6-1TFK	Brushed Nickel	1	$1,191
LG6-1TFD	Polished Nickel	1	$1,191
LG6-1TFY	Tuscan Bronze	1	$1,398

Hand Shower 1.8 gpm @ 80 psi

Tub Filler Extension Kit

91Ø-Ø62A	Polished Chrome	1	$116
91Ø-Ø62J	Brushed Nickel	1	$138
91Ø-Ø62D	Polished Nickel	1	$138
91Ø-Ø62Y	Tuscan Bronze	1	$155

Traditional Tub Filler Riser
Support Kit

931-134A	Polished Chrome	1	$100
931-134J	Brushed Nickel	1	$125
931-134D	Polished Nickel	1	$125
931-134Y	Tuscan Bronze	1	$150

CEC Compliant | Cal Green Compliant | Meets EPA WaterSense℠ Standards | NSF Lead-Free Certified | ADA Compliant | UltraSeal™ | SecurePfit™

SHOWROOM PREFERRED

Rhen™
Pressure Balance Tub & Shower Trim

Model	Finish	Case Qty	List Price
LG89-8RHC	Polished Chrome	3	$375
LG89-8RHK	Brushed Nickel	3	$470
LG89-8RHB	Matte Black	3	$525
LG89-8RHG	Brushed Gold	3	$545

Showerhead 1.8 gpm @ 80 psi

SHOWROOM PREFERRED

Contempra®
Pressure Balance Tub & Shower Trim

Model	Finish	Case Qty	List Price
LG89-8NCC	Polished Chrome	3	$254
LG89-8NCK	Brushed Nickel	3	$373
LG89-8NCB	Matte Black	3	$381
LG89-8NCBG	Brushed Gold	3	$461

Showerhead 1.8 gpm @ 80 psi

SHOWROOM PREFERRED

Kenzo™
Pressure Balance Tub & Shower Trim

LG89-8DFC	Polished Chrome	3	$322
LG89-8DFK	Brushed Nickel	3	$500
LG89-8DFB	Matte Black	3	$510

Showerhead 1.8 gpm @ 80 psi

Deckard™
Pressure Balance Tub & Shower Trim

LG89-8DAC	Polished Chrome	3	$176
LG89-8DAK	Brushed Nickel	3	$249
LG89-8DAB	Matte Black	3	$285

Showerhead 1.8 gpm @ 80 psi

SHOWROOM PREFERRED

Ashfield™
Pressure Balance Tub & Shower Trim

LG89-8YPC	Polished Chrome	3	$232
LG89-8YPK	Brushed Nickel	3	$414
LG89-8YPY	Tuscan Bronze	3	$518
LG89-8YPU	Rustic Bronze	3	$513

Showerhead 1.8 gpm @ 80 psi

Northcott™
Pressure Balance Tub & Shower Trim

LG89-8MGC	Polished Chrome	3	$176
LG89-8MGK	Brushed Nickel	3	$249
LG89-8MGY	Tuscan Bronze	3	$285

Showerhead 1.8 gpm @ 80 psi

SHOWROOM PREFERRED

Arterra™
Pressure Balance Tub & Shower Trim

LG89-8DEC	Polished Chrome	3	$327
LG89-8DEK	Brushed Nickel	3	$404
LG89-8DED	Polished Nickel	3	$404
LG89-8DEY	Tuscan Bronze	3	$456

Showerhead 1.8 gpm @ 80 psi

Bronson™
Pressure Balance Tub & Shower Trim

LG89-8BSC	Polished Chrome	3	$176
LG89-8BSK	Brushed Nickel	3	$249
LG89-8BSY	Tuscan Bronze	3	$285

Showerhead 1.8 gpm @ 80 psi

SHOWROOM PREFERRED

Marielle®
Pressure Balance Tub & Shower Trim

LG89-8MBC	Polished Chrome	3	$206
LG89-8MBK	Brushed Nickel	3	$349
LG89-8MBD	Polished Nickel	3	$349
LG89-8MBY	Tuscan Bronze	3	$376

Showerhead 1.8 gpm @ 80 psi

Saxton™
Pressure Balance Tub & Shower Trim

LG89-8GLC	Polished Chrome	3	$104
LG89-8GLK	Brushed Nickel	3	$230
LG89-8GLY	Tuscan Bronze	3	$264

Showerhead 1.8 gpm @ 80 psi

CEC Compliant | Cal Green Compliant | Meets EPA WaterSense℠ Standards | NSF Lead-Free Certified | ADA Compliant | UltraSeal™ | SecurePfit™

Avalon™
Pressure Balance Tub & Shower Trim

Model	Finish	Case Qty	List Price
LG89-8CBC	Polished Chrome	3	$104
LG89-8CBK	Brushed Nickel	3	$230
LG89-8CBY	Tuscan Bronze	3	$264

Showerhead 1.8 gpm @ 80 psi

Arkitek™
Pressure Balance Tub & Shower Trim

LG89-8LPMC	Polished Chrome	3	$104
LG89-8LPMK	Brushed Nickel	3	$230

Showerhead 1.8 gpm @ 80 psi

Serrano™
Pressure Balance Tub & Shower Trim

LG89-8SRC	Polished Chrome	3	$77
LG89-8SRK	Brushed Nickel	3	$150
LG89-8SRY	Tuscan Bronze	3	$176

Showerhead 1.8 gpm @ 80 psi

Weller™
Pressure Balance Tub & Shower Trim

LG89-8WRC	Polished Chrome	3	$88
LG89-8WRK	Brushed Nickel	3	$151
LG89-8WRY	Tuscan Bronze	3	$182

Showerhead 1.8 gpm @ 80 psi

CEC Compliant | Cal Green Compliant | Meets EPA WaterSense℠ Standards | NSF Lead-Free Certified | ADA Compliant | UltraSeal™ | SecurePfit™

SHOWROOM PREFERRED

Rhen™
Pressure Balance Shower Trim

Model	Finish	Case Qty	List Price
LG89-7RHC	Polished Chrome	3	$311
LG89-7RHK	Brushed Nickel	3	$387
LG89-7RHB	Matte Black	3	$435
LG89-7RHBG	Brushed Gold	3	$450

Showerhead 1.8 gpm @ 80 psi

SHOWROOM PREFERRED

Contempra®
Pressure Balance Shower Trim

Model	Finish	Case Qty	List Price
LG89-7NCC	Polished Chrome	3	$182
LG89-7NCK	Brushed Nickel	3	$270
LG89-7NCB	Matte Black	3	$273
LG89-7NCBG	Brushed Gold	3	$330

Showerhead 1.8 gpm @ 80 psi

SHOWROOM PREFERRED

Kenzo™
Pressure Balance Shower Trim

Model	Finish	Case Qty	List Price
LG89-7DFC	Polished Chrome	3	$241
LG89-7DFK	Brushed Nickel	3	$394
LG89-7DFB	Matte Black	3	$401

Showerhead 1.8 gpm @ 80 psi

Deckard™
Pressure Balance Shower Trim

Model	Finish	Case Qty	List Price
LG89-7DAC	Polished Chrome	3	$145
LG89-7DAK	Brushed Nickel	3	$218
LG89-7DAB	Matte Black	3	$254

Showerhead 1.8 gpm @ 80 psi

SHOWROOM PREFERRED

Ashfield™
Pressure Balance Shower Trim

Model	Finish	Case Qty	List Price
LG89-7YPC	Polished Chrome	3	$184
LG89-7YPK	Brushed Nickel	3	$292
LG89-7YPY	Tuscan Bronze	3	$430
LG89-7YPU	Rustic Bronze	3	$484

Showerhead 1.8 gpm @ 80 psi

Northcott™
Pressure Balance Shower Trim

Model	Finish	Case Qty	List Price
LG89-7MGC	Polished Chrome	3	$145
LG89-7MGK	Brushed Nickel	3	$218
LG89-7MGY	Tuscan Bronze	3	$254

Showerhead 1.8 gpm @ 80 psi

SHOWROOM PREFERRED

Arterra™
Pressure Balance Shower Trim

Model	Finish	Case Qty	List Price
LG89-7DEC	Polished Chrome	3	$254
LG89-7DEK	Brushed Nickel	3	$327
LG89-7DED	Polished Nickel	3	$327
LG89-7DEY	Tuscan Bronze	3	$389

Showerhead 1.8 gpm @ 80 psi

Bronson™
Pressure Balance Shower Trim

Model	Finish	Case Qty	List Price
LG89-7BSC	Polished Chrome	3	$145
LG89-7BSK	Brushed Nickel	3	$218
LG89-7BSY	Tuscan Bronze	3	$254

Showerhead 1.8 gpm @ 80 psi

SHOWROOM PREFERRED

Marielle®
Pressure Balance Shower Trim

Model	Finish	Case Qty	List Price
LG89-7MBC	Polished Chrome	3	$144
LG89-7MBK	Brushed Nickel	3	$305
LG89-7MBD	Polished Nickel	3	$305
LG89-7MBY	Tuscan Bronze	3	$323

Showerhead 1.8 gpm @ 80 psi

Saxton™
Pressure Balance Shower Trim

Model	Finish	Case Qty	List Price
LG89-7GLC	Polished Chrome	3	$78
LG89-7GLK	Brushed Nickel	3	$202
LG89-7GLY	Tuscan Bronze	3	$240

Showerhead 1.8 gpm @ 80 psi

CEC Compliant | Cal Green Compliant | Meets EPA WaterSense℠ Standards | NSF Lead-Free Certified | ADA Compliant | UltraSeal™ | SecurePfit™

	Model	Finish	Case Qty	List Price
Avalon™ Pressure Balance Shower Trim	LG89-7CBC	Polished Chrome	3	$78
	LG89-7CBK	Brushed Nickel	3	$202
	LG89-7CBY	Tuscan Bronze	3	$240

Showerhead 1.8 gpm @ 80 psi

Arkitek™ Pressure Balance Shower Trim	LG89-7LPMC	Polished Chrome	3	$78
	LG89-7LPMK	Brushed Nickel	3	$202

Showerhead 1.8 gpm @ 80 psi

Serrano™ Pressure Balance Shower Trim	LG89-7SRC	Polished Chrome	3	$58
	LG89-7SRK	Brushed Nickel	3	$117
	LG89-7SRY	Tuscan Bronze	3	$143

Showerhead 1.8 gpm @ 80 psi

Weller™ Pressure Balance Shower Trim	LG89-7WRC	Polished Chrome	3	$68
	LG89-7WRK	Brushed Nickel	3	$120
	LG89-7WRY	Tuscan Bronze	3	$145

Showerhead 1.8 gpm @ 80 psi

Bath Reference

CEC Compliant | Cal Green Compliant | Meets EPA WaterSense℠ Standards | NSF Lead-Free Certified | ADA Compliant | UltraSeal™ | SecurePfit™

SHOWROOM PREFERRED

Rhen™
Pressure Balance Valve Only Trim

Model	Finish	Case Qty	List Price
R89-1RHC	Polished Chrome	3	$175
R89-1RHK	Brushed Nickel	3	$225
R89-1RHB	Matte Black	3	$240
R89-1RHBG	Brushed Gold	3	$250

SHOWROOM PREFERRED

Kenzo™
Pressure Balance Valve Only Trim

Model	Finish	Case Qty	List Price
R89-1DFC	Polished Chrome	3	$142
R89-1DFK	Brushed Nickel	3	$231
R89-1DFB	Matte Black	3	$235

SHOWROOM PREFERRED

Ashfield™
Pressure Balance Valve Only Trim

Model	Finish	Case Qty	List Price
R89-1YPC	Polished Chrome	3	$109
R89-1YPK	Brushed Nickel	3	$192
R89-1YPY	Tuscan Bronze	3	$253
R89-1YPU	Rustic Bronze	3	$283

SHOWROOM PREFERRED

Arterra™
Pressure Balance Valve Only Trim

Model	Finish	Case Qty	List Price
R89-1DEC	Polished Chrome	3	$143
R89-1DEK	Brushed Nickel	3	$187
R89-1DEY	Tuscan Bronze	3	$218
R89-1DED	Polished Nickel	3	$187

SHOWROOM PREFERRED

Marielle®
Pressure Balance Valve Only Trim

Model	Finish	Case Qty	List Price
R89-1MBC	Polished Chrome	3	$95
R89-1MBK	Brushed Nickel	3	$176
R89-1MBY	Tuscan Bronze	3	$209
R89-1MBD	Polished Nickel	3	$176

SHOWROOM PREFERRED

Contempra®
Pressure Balance Valve Only Trim

Model	Finish	Case Qty	List Price
R89-1NCC	Polished Chrome	3	$94
R89-1NCK	Brushed Nickel	3	$145
R89-1NCB	Matte Black	3	$151
R89-1NCBG	Brushed Gold	3	$170

Deckard™
Pressure Balance Valve Only Trim

Model	Finish	Case Qty	List Price
R89-1DAC	Polished Chrome	3	$78
R89-1DAK	Brushed Nickel	3	$104
R89-1DAB	Matte Black	3	$140

Northcott™
Pressure Balance Valve Only Trim

Model	Finish	Case Qty	List Price
R89-1MGC	Polished Chrome	3	$78
R89-1MGK	Brushed Nickel	3	$104
R89-1MGY	Tuscan Bronze	3	$140

Bronson™
Pressure Balance Valve Only Trim

Model	Finish	Case Qty	List Price
R89-1BSC	Polished Chrome	3	$78
R89-1BSK	Brushed Nickel	3	$104
R89-1BSY	Tuscan Bronze	3	$140

Saxton™
Pressure Balance Valve Only Trim

Model	Finish	Case Qty	List Price
R89-1GLC	Polished Chrome	3	$62
R89-1GLK	Brushed Nickel	3	$140
R89-1GLY	Tuscan Bronze	3	$168

Avalon™
Pressure Balance Valve Only Trim

Model	Finish	Case Qty	List Price
R89-1CBC	Polished Chrome	3	$50
R89-1CBK	Brushed Nickel	3	$113
R89-1CBY	Tuscan Bronze	3	$138

Arkitek™
Pressure Balance Valve Only Trim

Model	Finish	Case Qty	List Price
R89-1LPMC	Polished Chrome	3	$63
R89-1LPMK	Brushed Nickel	3	$83

Serrano™
Pressure Balance Valve Only Trim

Model	Finish	Case Qty	List Price
R89-1SRC	Polished Chrome	3	$39
R89-1SRK	Brushed Nickel	3	$75
R89-1SRY	Tuscan Bronze	3	$99

Weller™
Pressure Balance Valve Only Trim

Model	Finish	Case Qty	List Price
R89-1WRC	Polished Chrome	3	$47
R89-1WRK	Brushed Nickel	3	$78
R89-1WRY	Tuscan Bronze	3	$104

CEC Compliant | Cal Green Compliant | Meets EPA WaterSense℠ Standards | NSF Lead-Free Certified | ADA Compliant | UltraSeal™ | SecurePfit™

SHOWROOM PREFERRED

Rhen™
Slide Bar/Hand Shower Kit

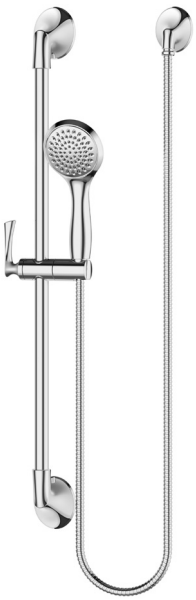

Model	Finish	Case Qty	List Price
LG16-1RHC	Polished Chrome	3	$325
LG16-1RHK	Brushed Nickel	3	$430
LG16-1RHB	Matte Black	3	$502
LG16-1RHBG	Brushed Gold	3	$524

Hand Shower 1.8 gpm @ 80 psi

SHOWROOM PREFERRED

Kenzo™
Slide Bar/Hand Shower Kit

Model	Finish	Case Qty	List Price
LG16-3DFC	Polished Chrome	3	$331
LG16-3DFK	Brushed Nickel	3	$440
LG16-3DFB	Matte Black	3	$513

Hand Shower 1.8 gpm @ 80 psi

SHOWROOM PREFERRED

Arterra™
Slide Bar/Hand Shower Kit

LG16-3DEC	Polished Chrome	3	$306
LG16-3DEK	Brushed Nickel	3	$409
LG16-3DED	Polished Nickel	3	$409
LG16-3DEY	Tuscan Bronze	3	$482

Hand Shower 1.8 gpm @ 80 psi

SHOWROOM PREFERRED

Slide Bar Package

LG16-3ØØC	Polished Chrome	6	$206
LG16-3ØØK	Brushed Nickel	6	$351
LG16-3ØØY	Tuscan Bronze	6	$445
LG16-3ØØU	Rustic Bronze	6	$517

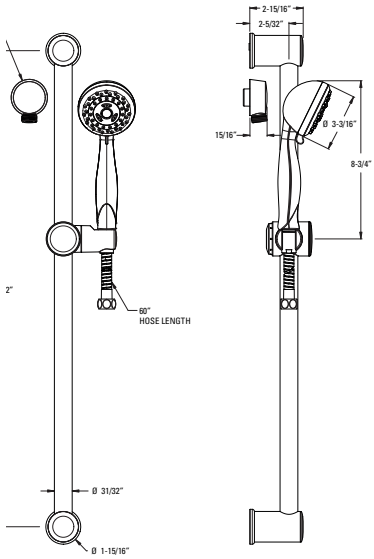

CEC Compliant | Cal Green Compliant | Meets EPA WaterSense℠ Standards | NSF Lead-Free Certified | ADA Compliant | UltraSeal™ | SecurePfit™

1/2" Thermostatic Tub & Shower Trim

SHOWROOM PREFERRED

1/2" Thermostatic Tub & Shower Trim

Model	Finish	Case Qty	List Price
LG89-8TUC	Polished Chrome	3	$285
LG89-8TUK	Brushed Nickel	3	$337
LG89-8TUY	Tuscan Bronze	3	$389

SHOWROOM PREFERRED

1/2" Thermostatic Shower Trim

Model	Finish	Case Qty	List Price
LG89-7TUC	Polished Chrome	3	$203
LG89-7TUK	Brushed Nickel	3	$285
LG89-7TUY	Tuscan Bronze	3	$373

1/2" Thermostatic Valve Only Trim

SHOWROOM PREFERRED

Rhen™
1/2" Thermostatic Valve Only Trim

Model	Finish	Case Qty	List Price
R89-2RHC	Polished Chrome	3	$285
R89-2RHK	Brushed Nickel	3	$340
R89-2RHB	Matte Black	3	$365
R89-2RHBG	Brushed Gold	3	$389

SHOWROOM PREFERRED

Contempra™
1/2" Thermostatic Valve Only Trim

Model	Finish	Case Qty	List Price
R89-2NCC	Polished Chrome	3	$218
R89-2NCK	Brushed Nickel	3	$270
R89-2NCB	Matte Black	3	$281
R89-2NCBG	Brushed Gold	3	$301

SHOWROOM PREFERRED

Kenzo™
1/2" Thermostatic Valve Only Trim

Model	Finish	Case Qty	List Price
R89-2DFC	Polished Chrome	3	$266
R89-2DFK	Brushed Nickel	3	$356
R89-2DFB	Matte Black	3	$357

SHOWROOM PREFERRED

1/2" Thermostatic Valve Only Trim

Model	Finish	Case Qty	List Price
R89-1TUC	Polished Chrome	3	$171
R89-1TUK	Brushed Nickel	3	$206
R89-1TUY	Tuscan Bronze	3	$223

3/4" Thermostatic Valve Only Trim

SHOWROOM PREFERRED

3/4" Thermostatic Valve Only Trim

Model	Finish	Case Qty	List Price
R89-9THC	Polished Chrome	3	$192
R89-9THK	Brushed Nickel	3	$213

SHOWROOM PREFERRED

3/4" Thermostatic Volume Control Valve Trim

Model	Finish	Case Qty	List Price
R78-9VUC	Polished Chrome	3	$103
R78-9VUK	Brushed Nickel	3	$144

CEC Compliant | Cal Green Compliant | Meets EPA WaterSense℠ Standards | NSF Lead-Free Certified | ADA Compliant | UltraSeal™ | SecurePfit™

Bath Reference

SHOWROOM PREFERRED

Rhen™

Model	Finish	Case Qty	List Price
Ø16-RH1C	Polished Chrome	3	$105
Ø16-RH1K	Brushed Nickel	3	$145
Ø16-RH1B	Matte Black	3	$162
Ø16-RH1BG	Brushed Gold	3	$175

SHOWROOM PREFERRED

Kenzo™

Model	Finish	Case Qty	List Price
Ø16-DFØC	Polished Chrome	3	$102
Ø16-DFØK	Brushed Nickel	3	$141
Ø16-DFØB	Matte Black	3	$144

SHOWROOM PREFERRED

Ashfield™

Model	Finish	Case Qty	List Price
Ø16-YPØC	Polished Chrome	3	$87
Ø16-YPØK	Brushed Nickel	3	$126
Ø16-YPØY	Tuscan Bronze	3	$186
Ø16-YPØU	Rustic Bronze	3	$193

SHOWROOM PREFERRED

Arterra™

Model	Finish	Case Qty	List Price
Ø16-DE1C	Polished Chrome	3	$106
Ø16-DE1K	Brushed Nickel	3	$125
Ø16-DE1D	Polished Nickel	3	$125
Ø16-DE1Y	Tuscan Bronze	3	$145

SHOWROOM PREFERRED

Marielle®

Model	Finish	Case Qty	List Price
Ø16-MBØC	Polished Chrome	3	$86
Ø16-MBØK	Brushed Nickel	3	$121
Ø16-MBØD	Polished Nickel	3	$121
Ø16-MBØY	Tuscan Bronze	3	$180

SHOWROOM PREFERRED

Contempra®

Model	Finish	Case Qty	List Price
Ø16-NC1C	Polished Chrome	3	$81
Ø16-NC1K	Brushed Nickel	3	$106
Ø16-NC1B	Matte Black	3	$122
Ø16-NC1BG	Brushed Gold	3	$147

SHOWROOM PREFERRED

3-Function Diverter Trim

Model	Finish	Case Qty	List Price
R79-6ØØC	Polished Chrome	18	$134
R79-6ØØK	Brushed Nickel	18	$186

Deckard™

Model	Finish	Case Qty	List Price
Ø16-DAØC	Polished Chrome	3	$73
Ø16-DAØK	Brushed Nickel	3	$88
Ø16-DAØB	Matte Black	3	$125

Northcott™

Model	Finish	Case Qty	List Price
Ø16-MGØC	Polished Chrome	3	$73
Ø16-MGØK	Brushed Nickel	3	$88
Ø16-MGØY	Tuscan Bronze	3	$125

Bronson™

Model	Finish	Case Qty	List Price
Ø16-BSØC	Polished Chrome	3	$73
Ø16-BSØK	Brushed Nickel	3	$88
Ø16-BSØY	Tuscan Bronze	3	$125

Saxton™

Model	Finish	Case Qty	List Price
Ø16-GLØC	Polished Chrome	3	$56
Ø16-GLØK	Brushed Nickel	3	$78
Ø16-GLØY	Tuscan Bronze	3	$104

Avalon™

Model	Finish	Case Qty	List Price
Ø16-CB1C	Polished Chrome	3	$62
Ø16-CB1K	Brushed Nickel	3	$86
Ø16-CB1Y	Tuscan Bronze	3	$115

Serrano™

Model	Finish	Case Qty	List Price
Ø16-SRØC	Polished Chrome	3	$58
Ø16-SRØK	Brushed Nickel	3	$80
Ø16-SRØY	Tuscan Bronze	3	$107

CEC Compliant | Cal Green Compliant | Meets EPA WaterSense℠ Standards | NSF Lead-Free Certified | ADA Compliant | UltraSeal™ | SecurePfit™

FREE-STANDING TUB FILLERS

Rhen™

Single Hole Free-Standing Tub Filler with Hand Shower

Model	Finish	Case Qty	List Price
LG6-1RHC	Polished Chrome	1	$1,515
LG6-1RHK	Brushed Nickel	1	$1,648
LG6-1RHB	Matte Black	1	$1,778
LG6-1RHBG	Brushed Gold	1	$1,924

Technical Info

Holes: • 1-Hole Installation

Features:
- Sleek, Modern Design
- Ceramic Disc Valve
- Metal Lever Handle
- 8 gpm @ 60 psi
- Hand Shower 1.8 gpm @ 80 psi

Must Order Free-Standing Rough In Valve Separately. See Valve Section.

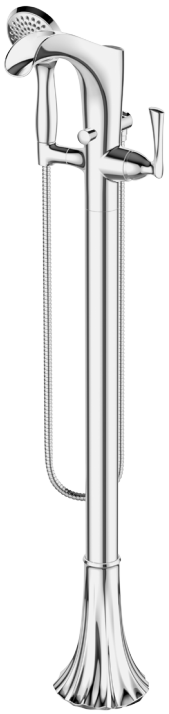

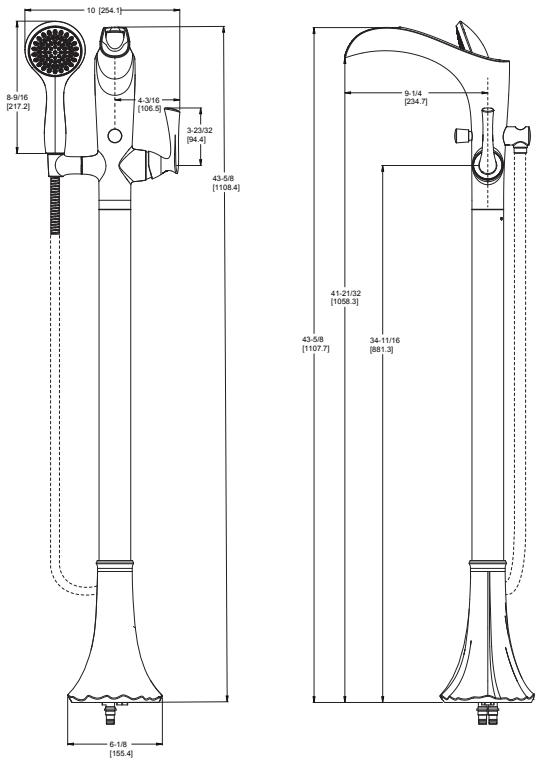

SHOWROOM PREFERRED

Modern Single Hole Free-Standing Tub Filler with Hand Shower

Model	Finish	Case Qty	List Price
LG6-1MFC	Polished Chrome	1	$827
LG6-1MFK	Brushed Nickel	1	$1,010
LG6-1MFD	Polished Nickel	1	$1,010
LG6-1MFY	Tuscan Bronze	1	$1,087

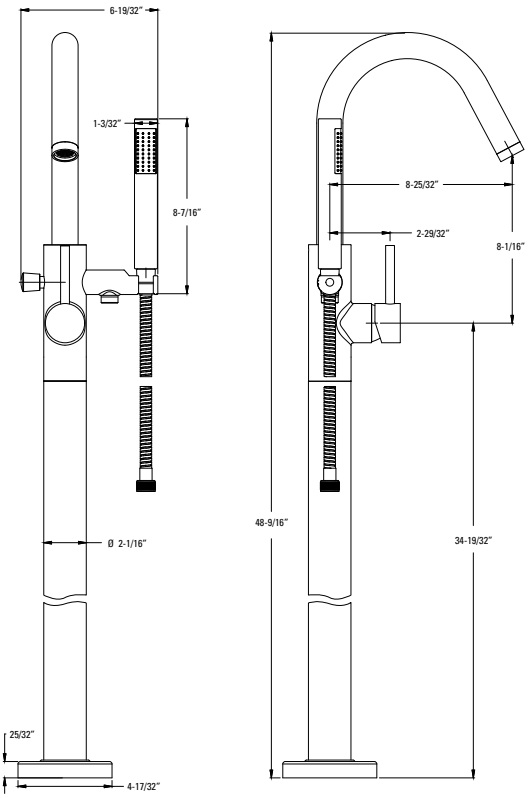

Technical Info

Holes: • 1-Hole Installation

Features:
- Sleek, Modern Design
- Ceramic Disc Valve
- Metal Lever Handle
- 8 gpm @ 60 psi
- Hand Shower 1.8 gpm @ 80 psi

Must Order Free-Standing Rough In Valve Separately. See Valve Section.

CEC Compliant | Cal Green Compliant | Meets EPA WaterSense℠ Standards | NSF Lead-Free Certified | ADA Compliant | UltraSeal™ | SecurePfit™

Traditional Double Riser Free-Standing Tub Filler with Hand Shower

Model	Finish	Case Qty	List Price
LG6-1TFC	Polished Chrome	1	$1,034
LG6-1TFK	Brushed Nickel	1	$1,191
LG6-1TFD	Polished Nickel	1	$1,191
LG6-1TFY	Tuscan Bronze	1	$1,398

Technical Info

Holes: • 2-Hole Installation

Features:
- Traditional Double Riser Tub Filler
- Ceramic Disc Valve
- Metal Lever Handle
- Both Finished Matched Metal and White Ceramic Hot and Cold Inserts Included
- 3/4" to 1/2" Adaptor Included
- 9 gpm @ 45 psi
- Hand Shower 1.8 gpm @ 80 psi

No Additional Valving Needed.

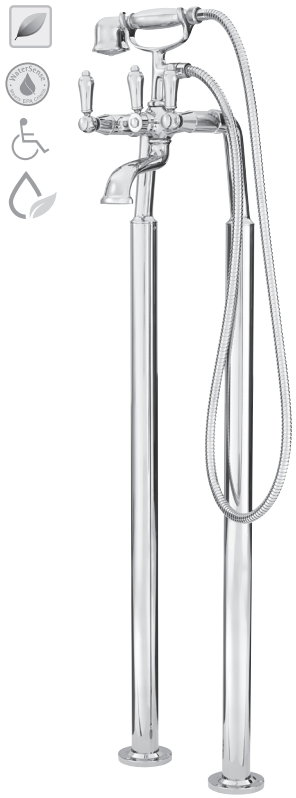

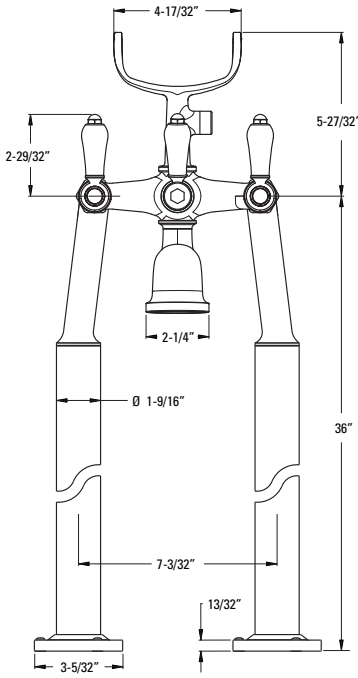

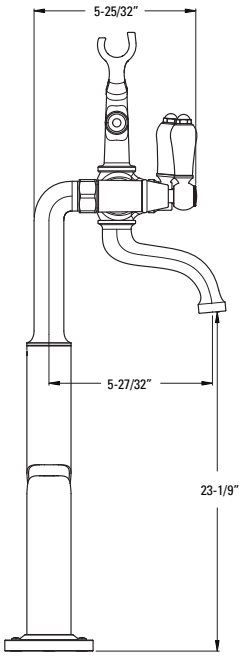

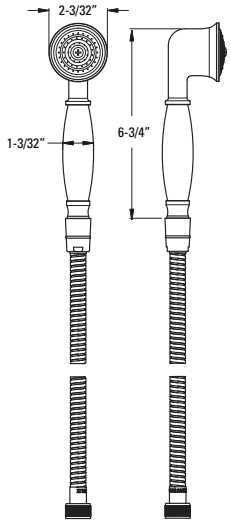

Tub Filler Extension Kit

91Ø-Ø62A	Polished Chrome	1	$116
91Ø-Ø62J	Brushed Nickel	1	$138
91Ø-Ø62D	Polished Nickel	1	$138
91Ø-Ø62Y	Tuscan Bronze	1	$155

Features:
- 4" Extension
- All Metal Construction
- To Be Used with Traditional Double Riser Free-Standing Tub Filler with Hand Shower RT6-1TF*

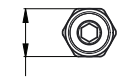

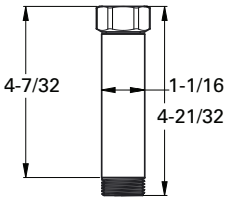

Tub Filler Riser Support Kit

931-134A	Polished Chrome	1	$100
931-134J	Brushed Nickel	1	$125
931-134D	Polished Nickel	1	$125
931-134Y	Tuscan Bronze	1	$150

Features:
- Easy Install on Traditional Double Riser Tub Filler
- Wall or Overflow Connection Included
- Support System to Reduce Wobble

CEC Compliant | Cal Green Compliant | Meets EPA WaterSense℠ Standards | NSF Lead-Free Certified | ADA Compliant | UltraSeal™ | SecurePfit™

RHEN
PAGE: 44

KENZO
PAGE: 60

ASHFIELD
PAGE: 76

ARTERRA
PAGE: 86

MARIELLE
PAGE: 96

CONTEMPRA
PAGE: 104

DECKARD
PAGE: 114

NORTHCOTT
PAGE: 122

BRONSON
PAGE: 130

SAXTON
PAGE: 138

AVALON
PAGE: 146

ARKITEK
PAGE: 154

SERRANO
PAGE: 162

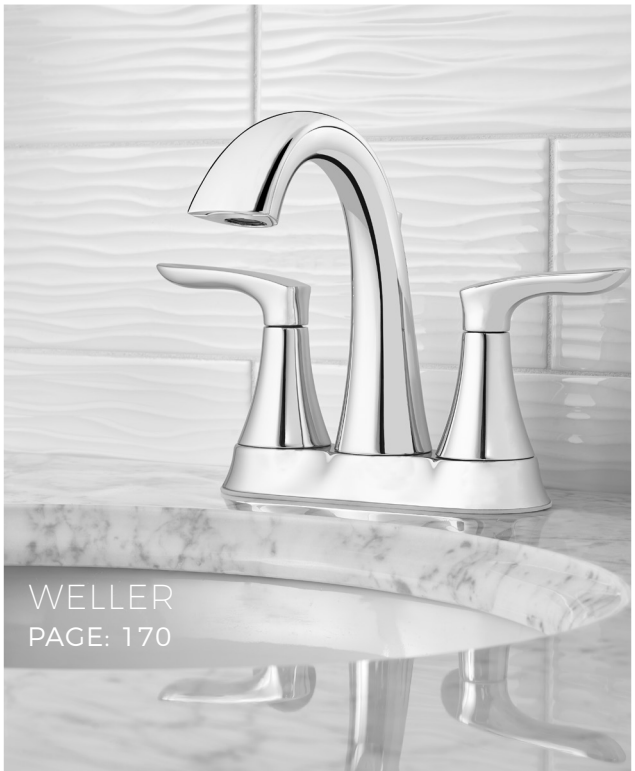
WELLER
PAGE: 170

PARISA
PAGE: 178

RHEN
Available Fall 2018

SHOWROOM PREFERRED

Rhen

FOLDS THAT FLOW WITH THE NATURAL
ELEGANCE OF WATER. RHEN MAKES AN ENTRANCE.

In a world of haste, there is a haven to be found in the graceful folds of Rhen. Hourglass silhouettes echo hand-tailored eveningwear, enchanting from every angle, yet utterly mesmerizing in motion. Inspired by the designer's heirloom wedding gown, the elements of this collection are perfectly imperfect organic pieces that imbue the transitional faucet with a twist of nostalgia. Weighty brass fixtures include lavatory faucets, tub fillers, slide bar kits, diverters and a full suite of accessories, individually draped in four refined finishes.

As water cascades from the petite peek-a-boo trough spout, your elegant evenings out begin even before you leave the bath, and returning home becomes a welcome respite, no matter the hour.

Be the first to get the latest information regarding Rhen.
Sign up for Rhen alerts at
pfisterfaucets.com/rhen

Single Control Lavatory
LG42-RH1C

8" Widespread Lavatory
LG49-RH1C

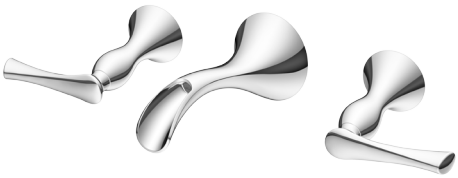

8" Wall Mount Lavatory
LG49-RH2C

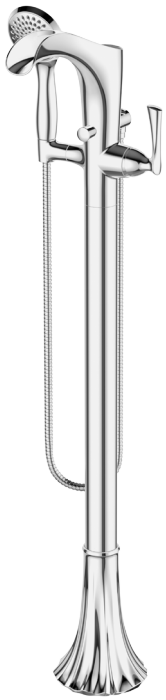

Single Hole
Free-Standing Trough Tub
Filler with Hand Shower
LG6-1RHC

3-Hole Roman
Tub Trim
RT6-5RHC

4-Hole Roman Tub
Trim with Hand Shower
LG6-4RHC

Tub & Shower
LG89-8RHC

Shower Only
LG89-7RHC

Valve Only
R89-1RHC

1/2" Thermostatic
Valve Trim Only
R89-2RHC

Diverter Trim
Ø16-RH1C

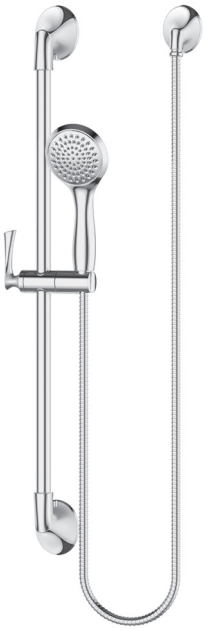

Slide Bar/Hand Shower Kit
LG16-3RHC

Accessories

18" & 24" Towel Bar
BTB-RH1C & BTB-RH2C

Towel Ring
BRB-RHØC

Paper Holder
BPH-RHØC

Robe Hook
BRH-RHØC

Single Control Lavatory Trough

Model	Finish	Case Qty	List Price
LG42-RH1C	Polished Chrome	3	$325
LG42-RH1K	Brushed Nickel	3	$455
LG42-RH1B	Matte Black	3	$465
LG42-RH1BG	Brushed Gold	3	$475

Available Fall 2018

Technical Info

Holes: • 1 or 3-Hole 4" Installation

Features:
- Ceramic Disc Valve
- Metal Lever Handle
- Single Post Mounting Ring
- 3-Hole Deckplate Sold Separately 961-232
- All Metal Push and Seal
- 1.2 gpm @ 60 psi

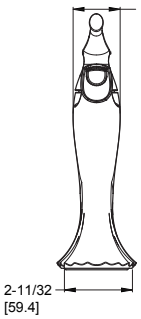

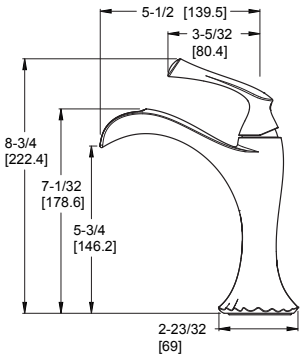

8" Widespread Lavatory Trough

LG49-RH1C	Polished Chrome	3	$435
LG49-RH1K	Brushed Nickel	3	$620
LG49-RH1B	Matte Black	3	$625
LG49-RH1BG	Brushed Gold	3	$635

Available Fall 2018

Holes: • 3-Hole 8-15" Installation

Features:
- Ceramic Disc Valves
- Metal Lever Handles
- All Metal Push and Seal™
- Order 971-Ø26Ø to Increase Max. Install Depth to 3"
- 1.2 gpm @ 60 psi

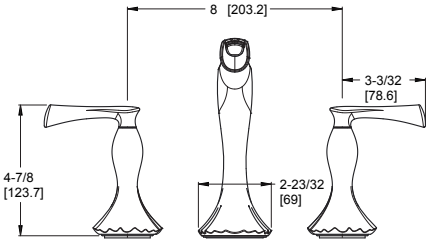

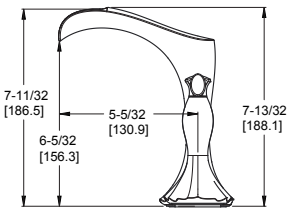

CEC Compliant | Cal Green Compliant | Meets EPA WaterSense℠ Standards | NSF Lead-Free Certified | ADA Compliant | UltraSeal™ | SecurePfit™

8" Wall Mount Lavatory Trough

Model	Finish	Case Qty	List Price
LG49-RH2C	Polished Chrome	3	$325
LG49-RH2K	Brushed Nickel	3	$515
LG49-RH2B	Matte Black	3	$520
LG49-RH2BG	Brushed Gold	3	$530

Available Fall 2018

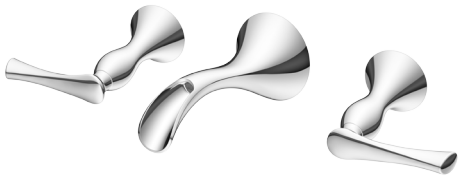

Technical Info

Holes: • 3-Hole 8-15" Installation

Features:
- Ceramic Disc Valves
- Metal Lever Handles
- Grid Strainer Sold Seperately
- 1.2 gpm @ 60 psi

Must Order Wall Mount Rough In Valve Separately. See Valve Section.

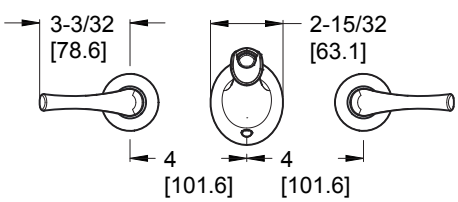

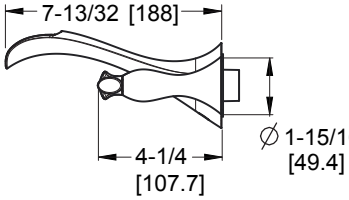

Universal Grid Strainer

T47-9GSC	Polished Chrome	6	$44
T47-9GSK	Brushed Nickel	6	$50
T47-9GSB	Matte Black	6	$57
T47-9GSBG	Brushed Gold	6	$76

Features:
- All Metal Grid Strainer
- With Overflow
- 1 1/4" Tailpiece

Universal Grid Strainer

T47-7GLC	Polished Chrome	6	$44
T47-7GLK	Brushed Nickel	6	$50
T47-7GLB	Matte Black	6	$57
T47-7GLBG	Brushed Gold	6	$76

Features:
- All Metal Grid Strainer
- No Overflow
- 1 1/4" Tailpiece

CEC Compliant | Cal Green Compliant | Meets EPA WaterSense℠ Standards | NSF Lead-Free Certified | ADA Compliant | UltraSeal™ | SecurePfit™

3-Hole Roman Tub Trough

Model	Finish	Case Qty	List Price
RT6-5RHC	Polished Chrome	3	$520
RT6-5RHK	Brushed Nickel	3	$675
RT6-5RHB	Matte Black	3	$685
RT6-5RHBG	Brushed Gold	3	$700

Available Fall 2018

Technical Info

Holes: • 3-Hole

Features:
- Ceramic Disc Valves
- Metal Lever Handles
- Fixed Spout

Must Order ØX6-Ø5ØR or ØX6-15ØR Rough In Valve Separately. See Valve Section.

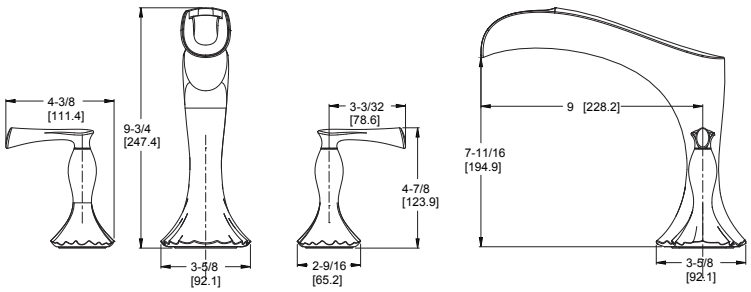

4-Hole Roman Tub Trough with Hand Shower

Model	Finish	Case Qty	List Price
LG6-4RHC	Polished Chrome	3	$590
LG6-4RHK	Brushed Nickel	3	$850
LG6-4RHB	Matte Black	3	$865
LG6-4RHBG	Brushed Gold	3	$895

Available Fall 2018

Holes: • 4-Hole

Features:
- Ceramic Disc Valves
- Metal Lever Handles
- Fixed Spout
- Handheld Shower
- Hand Shower 1.8 gpm @ 80psi

Must Order ØX6-44ØR Rough In Valve Separately. See Valve Section.

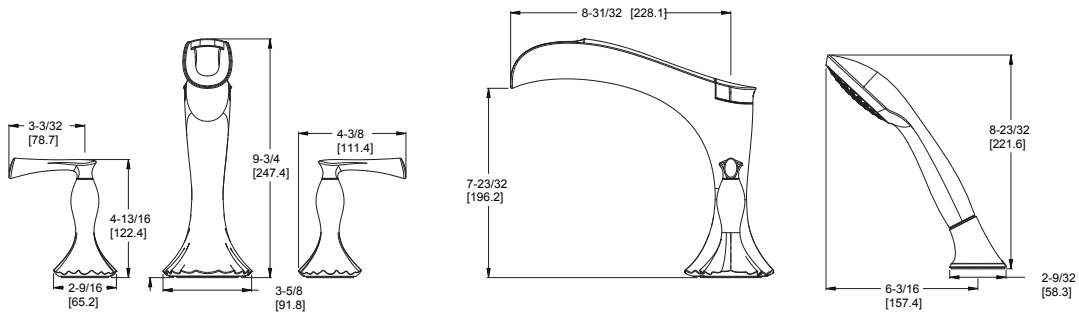

CEC Compliant | Cal Green Compliant | Meets EPA WaterSense℠ Standards | NSF Lead-Free Certified | ADA Compliant | UltraSeal™ | SecurePfit™

SHOWROOM PREFERRED

Single Hole Free-Standing Tub Filler with Hand Shower

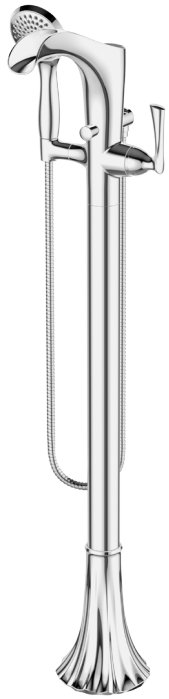

Model	Finish	Case Qty	List Price
LG6-1RHC	Polished Chrome	1	$1,515
LG6-1RHK	Brushed Nickel	1	$1,648
LG6-1RHB	Matte Black	1	$1,778
LG6-1RHBG	Brushed Gold	1	$1,924

Available Fall 2018

Technical Info

Holes: • 1-Hole Installation

Features:
- Modern Trough Design
- Ceramic Disc Valves
- Metal Lever Handles
- Brass Construction
- 8 gpm @ 60 psi
- Hand Shower 1.8 gpm @ 80 psi

Must Order Free-Standing Rough In Valve Separately. See Valve Section.

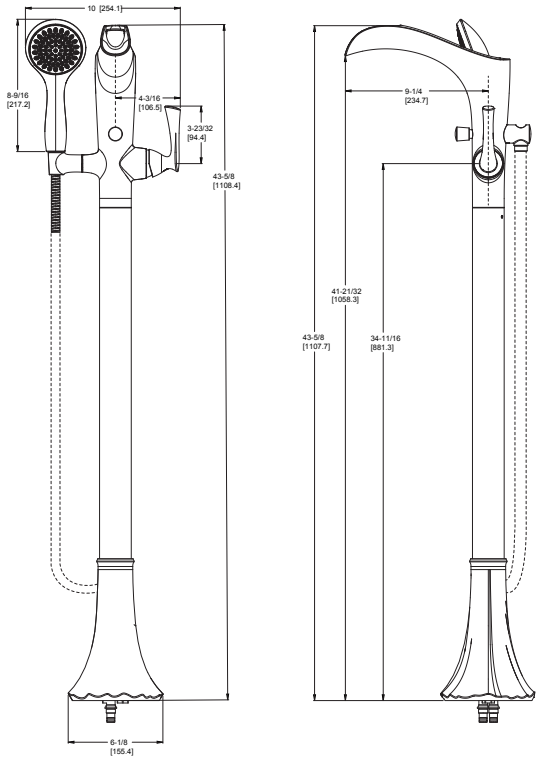

Rhen™

CEC Compliant | Cal Green Compliant | Meets EPA WaterSense℠ Standards | NSF Lead-Free Certified | ADA Compliant | UltraSeal™ | SecurePfit™

Rhen™ - Pressure Balance Tub & Shower

Pressure Balance Tub & Shower Trim

Model	Finish	Case Qty	List Price
LG89-8RHC	Polished Chrome	3	$375
LG89-8RHK	Brushed Nickel	3	$470
LG89-8RHB	Matte Black	3	$525
LG89-8RHBG	Brushed Gold	3	$545

Available Fall 2018

Technical Info

Features:
- SecurePfit™
- Metal Lever Handle
- Hot/Cold Indicator
- All Brass Raincan Showerhead
- IP Connection Only Tub Spout
- SecurePfit™ Wall Flange
- Showerhead 1.8 gpm @ 80 psi

Must Order Pressure Balance Rough in Valve Separately. See Valve Section.

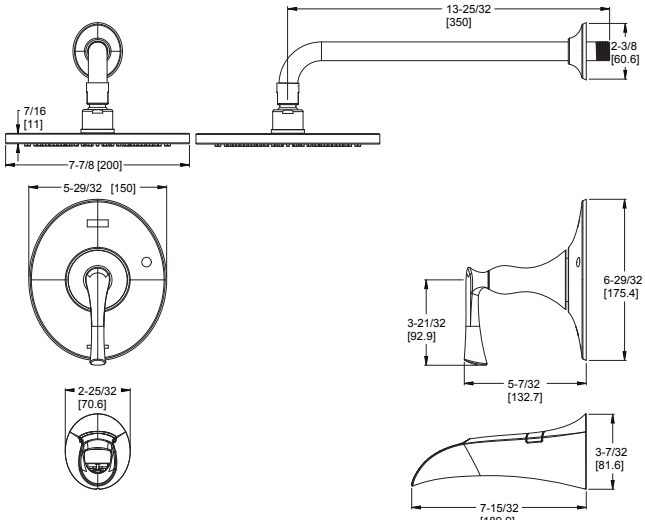

Pressure Balance Shower Trim

LG89-7RHC	Polished Chrome	3	$311
LG89-7RHK	Brushed Nickel	3	$387
LG89-7RHB	Matte Black	3	$435
LG89-7RHBG	Brushed Gold	3	$450

Available Fall 2018

Features:
- SecurePfit™
- Metal Lever Handle
- Hot/Cold Indicator
- All Brass Raincan Showerhead
- SecurePfit™ Wall Flange
- Showerhead 1.8 gpm @ 80 psi

Must Order Pressure Balance Rough in Valve Separately. See Valve Section.

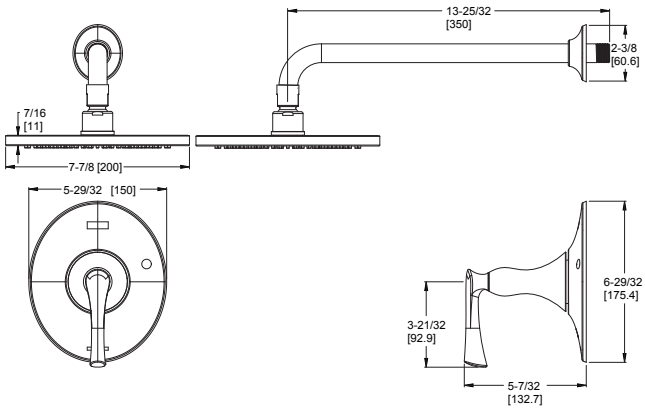

Rhen™

CEC Compliant | Cal Green Compliant | Meets EPA WaterSense℠ Standards | NSF Lead-Free Certified | ADA Compliant | UltraSeal™ | SecurePfit™

SHOWROOM PREFERRED

Pressure Balance Valve Only Trim

Model	Finish	Case Qty	List Price
R89-1RHC	Polished Chrome	3	$175
R89-1RHK	Brushed Nickel	3	$225
R89-1RHB	Matte Black	3	$240
R89-1RHBG	Brushed Gold	3	$250

Available Fall 2018

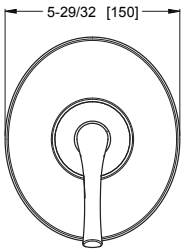

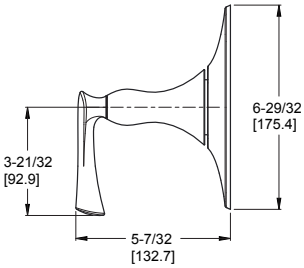

Technical Info

Features:
- SecurePfit™
- Metal Lever Handle
- Hot/Cold Indicator
- SecurePfit™ Wall Flange

Must Order Pressure Balance Rough in Valve Separately. See Valve Section.

1/2" Thermostatic Valve Only Trim

R89-2RHC	Polished Chrome	3	$285
R89-2RHK	Brushed Nickel	3	$340
R89-2RHB	Matte Black	3	$365
R89-2RHBG	Brushed Gold	3	$389

Available Fall 2018

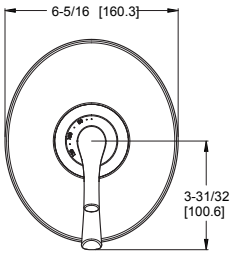

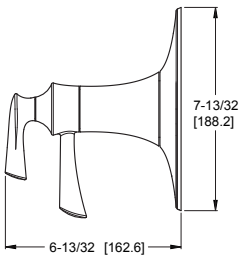

Features:
- SecurePfit™
- Metal Lever Handle
- Front Handle Controls Temperature
- Back Handle Controls Volume

Must Order 1/2" Thermostatic Rough In Valve Separately. See Valve Section.

Diverter Trim Only

Ø16-RH1C	Polished Chrome	3	$105
Ø16-RH1K	Brushed Nickel	3	$145
Ø16-RH1B	Matte Black	3	$162
Ø16-RH1BG	Brushed Gold	3	$175

Available Fall 2018

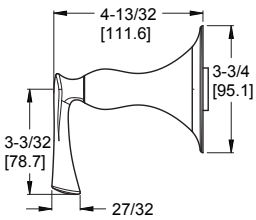

Features:
- Metal Lever Handle and Matching Flange
- Can Be Used with Ø15-2WDX for Cal Green Compliant Applications

Must Order Ø15-4WDX or Ø15-2WDX Rough In Valve Separately. See Valve Section.

Rhen™

CEC Compliant | Cal Green Compliant | Meets EPA WaterSense℠ Standards | NSF Lead-Free Certified | ADA Compliant | UltraSeal™ | SecurePfit™

Slide Bar/Hand Shower Kit

Model	Finish	Case Qty	List Price
LG16-3RHC	Polished Chrome	3	$325
LG16-3RHK	Brushed Nickel	3	$430
LG16-3RHB	Matte Black	3	$502
LG16-3RHBG	Brushed Gold	3	$524

Available Fall 2018

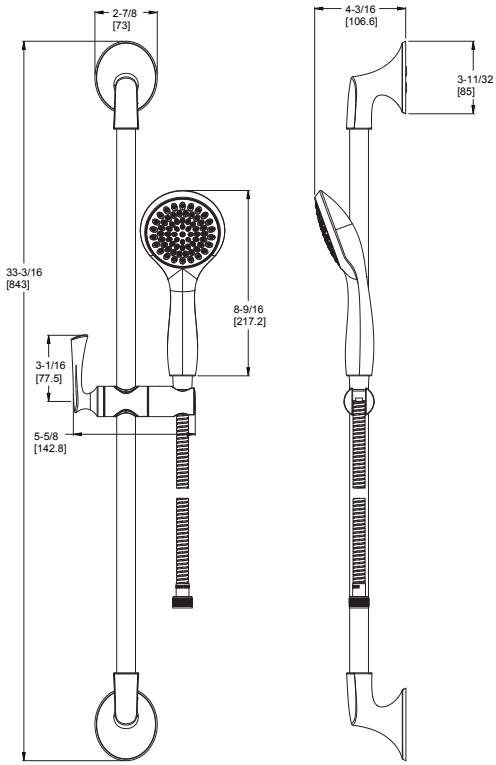

Technical Info

Features:
- Complete Slide Bar Package with Hand Held Shower, Hose, Drop Elbow, and Slide Bar
- Self Cleaning Handheld Showerhead
- 60" Metal Hose with Matching Finish
- Back Flow Prevention
- Works with Rhen Diverter Trim and Valve
- Not to be Used as a Grab Bar
- Hand Shower 1.8 gpm @ 60 psi

CEC Compliant | Cal Green Compliant | Meets EPA WaterSense℠ Standards | NSF Lead-Free Certified | ADA Compliant | UltraSeal™ | SecurePfit™

Showerhead

Model	Finish	Case Qty	List Price
973-264A	Polished Chrome	1	$98
973-264J	Brushed Nickel	1	$119
973-264B	Matte Black	1	$119
973-264BG	Brushed Gold	1	$130

Available Fall 2018

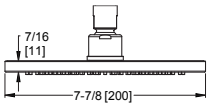

Technical Info

Features:
- All Brass Raincan Showerhead
- Easy To Clean Spray Nozzles
- Shower Arm and Flange Sold Separately
- Order 941-Ø55Ø for 1.5 gpm Showerhead Insert
- Showerhead 1.8 gpm @ 80 psi

Shower Arm Flange

96Ø-343A	Polished Chrome	1	$14
96Ø-343J	Brushed Nickel	1	$18
96Ø-343B	Matte Black	1	$16
96Ø-343BG	Brushed Gold	1	$20

Available Fall 2018

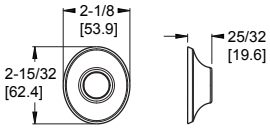

Features:
- All Metal
- Matches Kenzo Style & Finishes

Tub Spout

92Ø-2Ø9A	Polished Chrome	1	$81
92Ø-2Ø9J	Brushed Nickel	1	$92
92Ø-2Ø9B	Matte Black	1	$97
92Ø-2Ø9BG	Brushed Gold	1	$112

Available Fall 2018

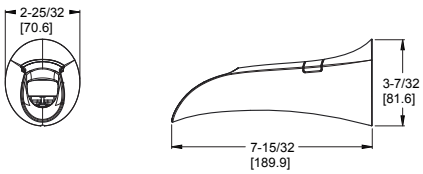

Features:
- All Metal
- IP & Quick Connect Diverted Spout

CEC Compliant | Cal Green Compliant | Meets EPA WaterSense℠ Standards | NSF Lead-Free Certified | ADA Compliant | UltraSeal™ | SecurePfit™

60" Hose

Model	Finish	Case Qty	List Price
Ø16-18ØC	Polished Chrome	6	$40
Ø16-18ØK	Brushed Nickel	6	$95
Ø16-18ØB	Matte Black	6	$137
Ø16-18ØBG	Brushed Gold	6	$72

Available Fall 2018

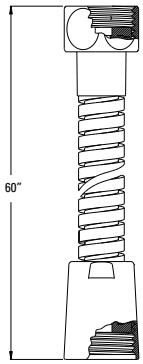

Technical Info

Features:
- 60" Anti-Twist Hose
- Matching Finish Metal Hose

Oval Drop Elbow

Model	Finish	Case Qty	List Price
96Ø-344A	Polished Chrome	3	$34
96Ø-344J	Brushed Nickel	3	$52
96Ø-344B	Matte Black	3	$73
96Ø-344BG	Brushed Gold	3	$61

Available Fall 2018

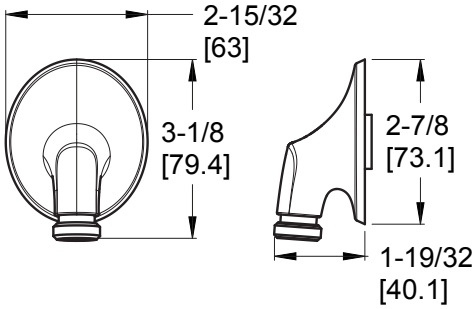

Features:
- 1/2" IP Connection
- Matching Finish

18" Towel Bar

Model	Finish	Case Qty	List Price
BTB-RH1C	Polished Chrome	3	$107
BTB-RH1K	Brushed Nickel	3	$117
BTB-RH1B	Matte Black	3	$127
BTB-RH1BG	Brushed Gold	3	$137

Available Fall 2018

Technical Info

Holes: • 2-Hole

Features:
- Premium Metal Construction
- Superior Mounting Posts
- Concealed Screw Installation
- Mounting Hardware Included

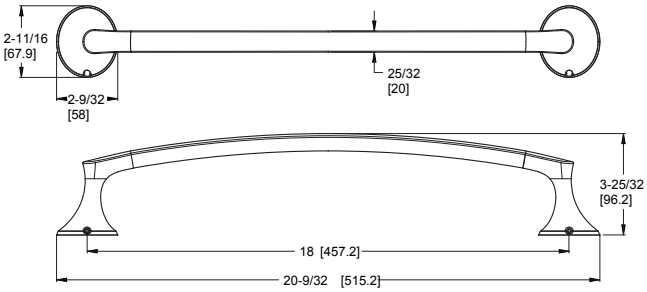

24" Towel Bar

BTB-RH2C	Polished Chrome	3	$155
BTB-RH2K	Brushed Nickel	3	$165
BTB-RH2B	Matte Black	3	$175
BTB-RH2BG	Brushed Gold	3	$185

Available Fall 2018

Holes: • 2-Hole

Features:
- Premium Metal Construction
- Superior Mounting Posts
- Concealed Screw Installation
- Mounting Hardware Included

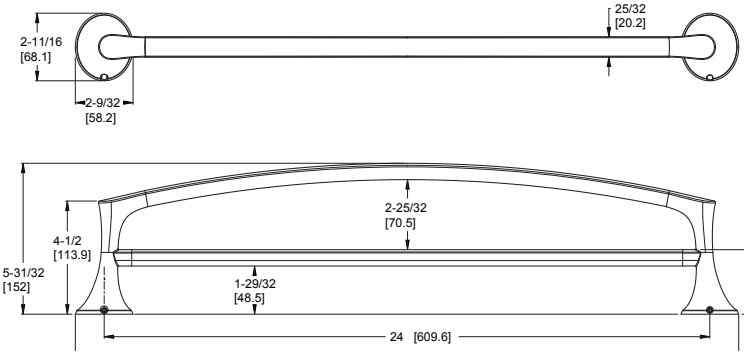

Towel Ring

BRB-RHØC	Polished Chrome	3	$82
BRB-RHØK	Brushed Nickel	3	$92
BRB-RHØB	Matte Black	3	$102
BRB-RHØBG	Brushed Gold	3	$112

Available Fall 2018

Holes: • 2-Hole

Features:
- Premium Metal Construction
- Superior Mounting Posts
- Concealed Screw Installation
- Mounting Hardware Included

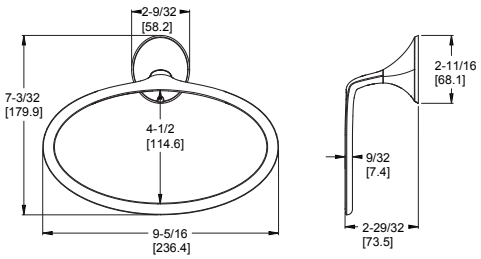

Rhen™ - Accessories

Paper Holder

Model	Finish	Case Qty	List Price
BPH-RHØC	Polished Chrome	3	$80
BPH-RHØK	Brushed Nickel	3	$95
BPH-RHØB	Matte Black	3	$105
BPH-RHØBG	Brushed Gold	3	$115

Available Fall 2018

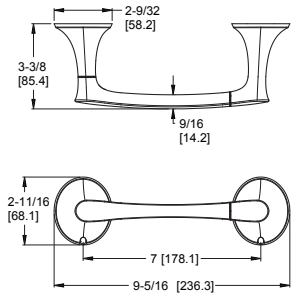

Technical Info

Holes: • 1-Hole

Features:
- Premium Metal Construction
- Pivot Swing Paper Mount
- Concealed Screw Installation
- Mounting Hardware Included

Robe Hook

Model	Finish	Case Qty	List Price
BRH-RHØC	Polished Chrome	3	$55
BRH-RHØK	Brushed Nickel	3	$65
BRH-RHØB	Matte Black	3	$75
BRH-RHØBG	Brushed Gold	3	$85

Available Fall 2018

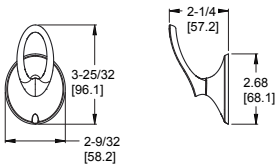

Holes: • 1-Hole

Features:
- Premium Metal Construction
- Superior Mounting Posts
- Concealed Screw Installation
- Mounting Hardware Included

KENZO

Single Control Lavatory
LG42-DF1C

Single Control Lavatory Trough
LG42-DFØC

Single Control Vessel Lavatory
LG4Ø-DF1C

Single Control Vessel Lavatory Trough
LG4Ø-DFØC

8" Widespread Lavatory
LG49-DF2C

8" Widespread Lavatory Trough
LG49-DFØC

3-Hole Roman Tub Trim
RT6-5D1C

3-Hole Roman Tub Trough Trim
RT6-5DFC

4-Hole Roman Tub Trim with Hand Shower
LG6-4D1C

4-Hole Roman Tub Trough Trim with Hand Shower
LG6-4DFC

8" Wall Mount Lavatory
LG49-DF3C

8" Wall Mount Lavatory Trough
LG49-DF1C

Tub & Shower
LG89-8DFC

Shower Only
LG89-7DFC

Valve Only
R89-1DFC

Thermostatic Valve Only
R89-2DFC

Diverter Trim
Ø16-DFØC

Slide Bar/ Hand Shower Kit
LG16-3DFC

Accessories

18" & 24" Towel Bar
BTB-DF1C & BTB-DF2C

Towel Ring
BRB-DF1C

Paper Holder
BPH-DF1C

Robe Hook
BRH-DF1C

Kenzo™ - Lavatory Faucets

Single Control Vessel Lavatory

Model	Finish	Case Qty	List Price
LG4Ø-DF1C	Polished Chrome	3	$382
LG4Ø-DF1K	Brushed Nickel	3	$526
LG4Ø-DF1B	Matte Black	3	$535

Technical Info

Holes: • 1-Hole Installation

Features:
- Ceramic Disc Valve
- Metal Lever Handle
- Single Post Mounting Ring
- Grid Strainer Sold Separately
- 1.2 gpm @ 60 psi

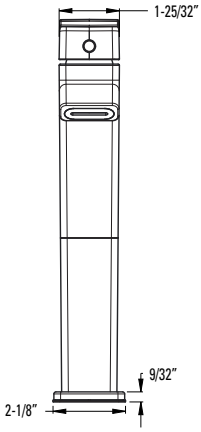

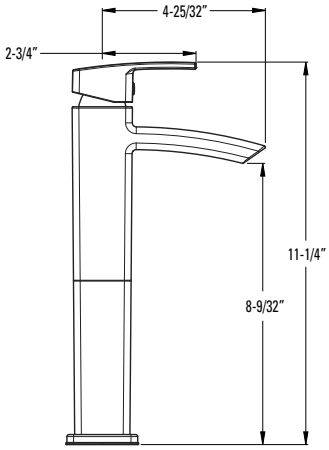

Single Control Vessel Lavatory Trough

Model	Finish	Case Qty	List Price
LG4Ø-DFØC	Polished Chrome	3	$403
LG4Ø-DFØK	Brushed Nickel	3	$548
LG4Ø-DFØB	Matte Black	3	$558

Holes: • 1-Hole Installation

Features:
- Ceramic Disc Valve
- Metal Lever Handle
- Single Post Mounting Ring
- Grid Strainer Sold Separately
- 1.2 gpm @ 60 psi

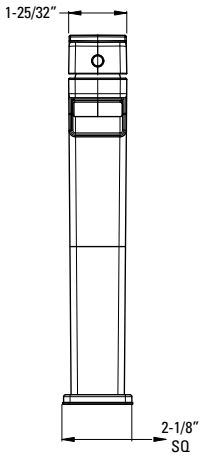

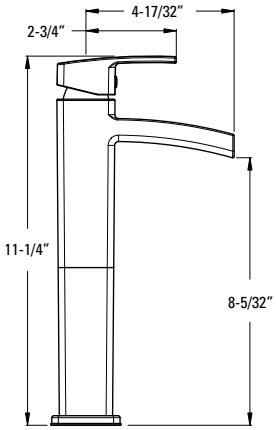

CEC Compliant | Cal Green Compliant | Meets EPA WaterSense℠ Standards | NSF Lead-Free Certified | ADA Compliant | UltraSeal™ | SecurePfit™

Single Control Lavatory

Model	Finish	Case Qty	List Price
LG42-DF1C	Polished Chrome	3	$313
LG42-DF1K	Brushed Nickel	3	$452
LG42-DF1B	Matte Black	3	$460

Technical Info

Holes: • 1 or 3-Hole 4" Installation

Features:
- Ceramic Disc Valve
- Metal Lever Handle
- Single Post Mounting Ring
- 3-Hole Deckplate Included
- All Metal Pop-Up
- 1.2 gpm @ 60 psi

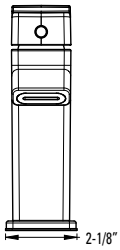

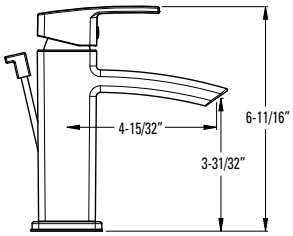

Single Control Lavatory Trough

LG42-DFØC	Polished Chrome	3	$337
LG42-DFØK	Brushed Nickel	3	$471
LG42-DFØB	Matte Black	3	$482

Holes: • 1 or 3-Hole 4" Installation

Features:
- Ceramic Disc Valve
- Metal Lever Handle
- Single Post Mounting Ring
- 3-Hole Deckplate Included
- All Metal Pop-Up
- 1.2 gpm @ 60 psi

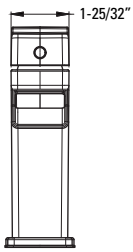

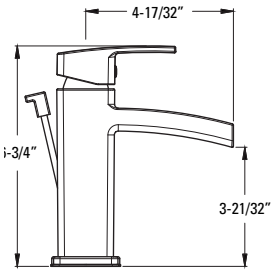

CEC Compliant | Cal Green Compliant | Meets EPA WaterSense℠ Standards | NSF Lead-Free Certified | ADA Compliant | UltraSeal™ | SecurePfit™

Kenzo™ - Lavatory Faucets

8" Widespread Lavatory

Model	Finish	Case Qty	List Price
LG49-DF2C	Polished Chrome	3	$431
LG49-DF2K	Brushed Nickel	3	$620
LG49-DF2B	Matte Black	3	$632

Technical Info

Holes: • 3-Hole 8-15" Installation

Features:
- Ceramic Disc Valves
- Metal Lever Handles
- All Metal Pop-Up
- Quick Connect Hose Assembly
- Order 971-Ø86Ø to Increase Max. Install Depth to 3"
- 1.2 gpm @ 60 psi

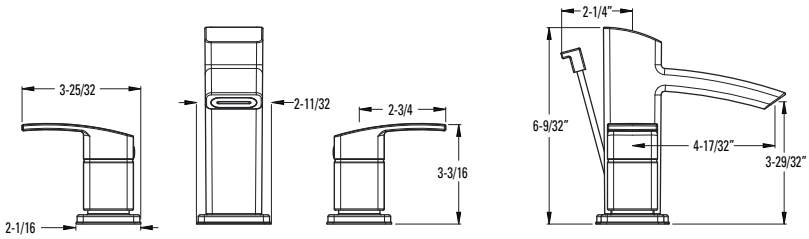

8" Widespread Lavatory Trough

LG49-DFØC	Polished Chrome	3	$451
LG49-DFØK	Brushed Nickel	3	$642
LG49-DFØB	Matte Black	3	$647

Holes: • 3-Hole 8-15" Installation

Features:
- Ceramic Disc Valves
- Metal Lever Handles
- All Metal Pop-Up
- Quick Connect Hose Assembly
- Order 971-Ø86Ø to Increase Max. Install Depth to 3"
- 1.2 gpm @ 60 psi

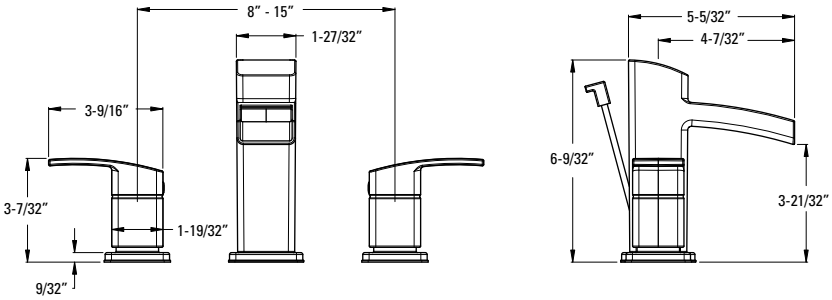

CEC Compliant | Cal Green Compliant | Meets EPA WaterSense℠ Standards | NSF Lead-Free Certified | ADA Compliant | UltraSeal™ | SecurePfit™

SHOWROOM PREFERRED

8" Wall Mount Lavatory

Model	Finish	Case Qty	List Price
LG49-DF3C	Polished Chrome	3	$328
LG49-DF3K	Brushed Nickel	3	$518
LG49-DF3B	Matte Black	3	$527

Technical Info

Holes: • 3-Hole 8" Installation

Features:
- Ceramic Disc Valves
- Metal Lever Handles
- Grid Strainer Sold Seperately
- 1.2 gpm @ 60 psi

Must Order Wall Mount Rough In Valve Separately. See Valve Section.

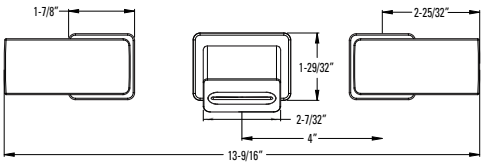

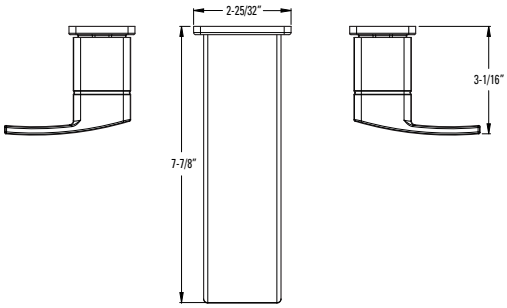

8" Wall Mount Lavatory Trough

Model	Finish	Case Qty	List Price
LG49-DF1C	Polished Chrome	3	$337
LG49-DF1K	Brushed Nickel	3	$534
LG49-DF1B	Matte Black	3	$539

Holes: • 3-Hole 8" Installation

Features:
- Ceramic Disc Valves
- Metal Lever Handles
- Grid Strainer Sold Seperately
- 1.2 gpm @ 60 psi

Must Order Wall Mount Rough In Valve Separately. See Valve Section.

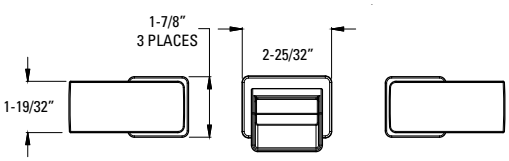

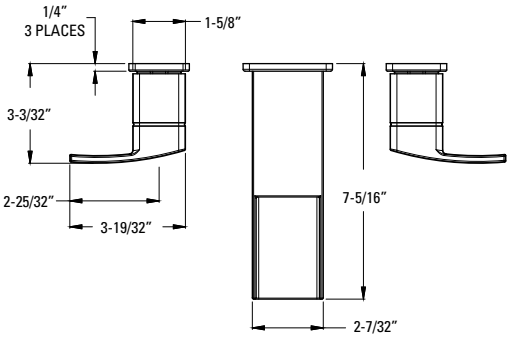

CEC Compliant | Cal Green Compliant | Meets EPA WaterSense℠ Standards | NSF Lead-Free Certified | ADA Compliant | UltraSeal™ | SecurePfit™

	Model	Finish	Case Qty	List Price
Universal Grid Strainer	T47-9GSC	Polished Chrome	6	$44
	T47-9GSK	Brushed Nickel	6	$50
	T47-9GSB	Matte Black	6	$57

Technical Info

Features:
- All Metal Grid Strainer
- With Overflow
- 1 1/4" Tailpiece

	Model	Finish	Case Qty	List Price
Universal Grid Strainer	T47-7GLC	Polished Chrome	6	$44
	T47-7GLK	Brushed Nickel	6	$50
	T47-7GLB	Matte Black	6	$57

Features:
- All Metal Grid Strainer
- No Overflow
- 1 1/4" Tailpiece

CEC Compliant | Cal Green Compliant | Meets EPA WaterSense℠ Standards | NSF Lead-Free Certified | ADA Compliant | UltraSeal™ | SecurePfit™

SHOWROOM PREFERRED

3-Hole Roman Tub Trim

Model	Finish	Case Qty	List Price
RT6-5D1C	Polished Chrome	3	$523
RT6-5D1K	Brushed Nickel	3	$689
RT6-5D1B	Matte Black	3	$701

Technical Info

Holes: • 3-Hole

Features:
- Ceramic Disc Valves
- Metal Lever Handles
- Fixed Spout

Must Order ØX6-Ø5ØR or ØX6-15ØR Rough In Valve Separately. See Valve Section.

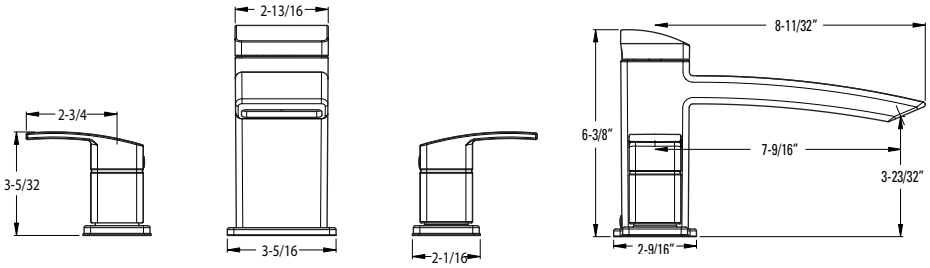

3-Hole Roman Tub Trough Trim

Model	Finish	Case Qty	List Price
RT6-5DFC	Polished Chrome	3	$539
RT6-5DFK	Brushed Nickel	3	$699
RT6-5DFB	Matte Black	3	$709

Holes: • 3-Hole

Features:
- Ceramic Disc Valves
- Metal Lever Handles
- Fixed Spout

Must Order ØX6-Ø5ØR or ØX6-15ØR Rough In Valve Separately. See Valve Section.

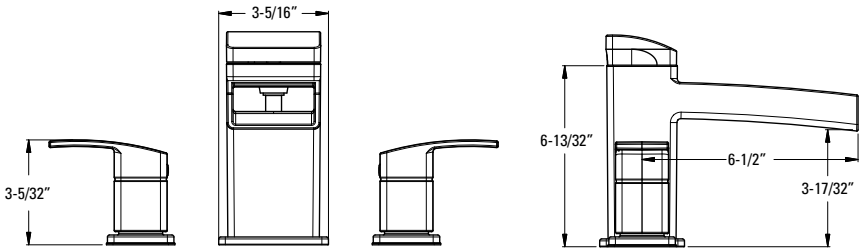

CEC Compliant | Cal Green Compliant | Meets EPA WaterSense℠ Standards | NSF Lead-Free Certified | ADA Compliant | UltraSeal™ | SecurePfit™

Kenzo™ - Tub Fillers

4-Hole Roman Tub Trim with Hand Shower

Model	Finish	Case Qty	List Price
LG6-4D1C	Polished Chrome	3	$590
LG6-4D1K	Brushed Nickel	3	$867
LG6-4D1B	Matte Black	3	$882

Technical Info

Holes: • 4-Hole

Features:
- Ceramic Disc Valves
- Metal Lever Handles
- Fixed Spout
- Handheld Shower
- Easy To Clean Spray Nozzles
- Hand Shower 1.8 gpm @ 80psi

Must Order ØX6-44ØR Rough In Valve Separately. See Valve Section.

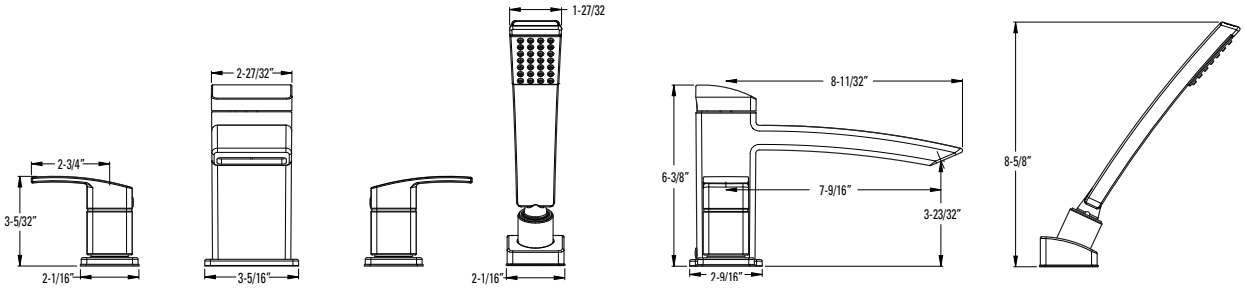

4-Hole Roman Tub Trough Trim with Hand Shower

LG6-4DFC	Polished Chrome	3	$611
LG6-4DFK	Brushed Nickel	3	$880
LG6-4DFB	Matte Black	3	$896

Holes: • 4-Hole

Features:
- Ceramic Disc Valves
- Metal Lever Handles
- Fixed Spout
- Handheld Shower
- Easy To Clean Spray Nozzles
- Hand Shower 1.8 gpm @ 80psi

Must Order ØX6-44ØR Rough In Valve Separately. See Valve Section.

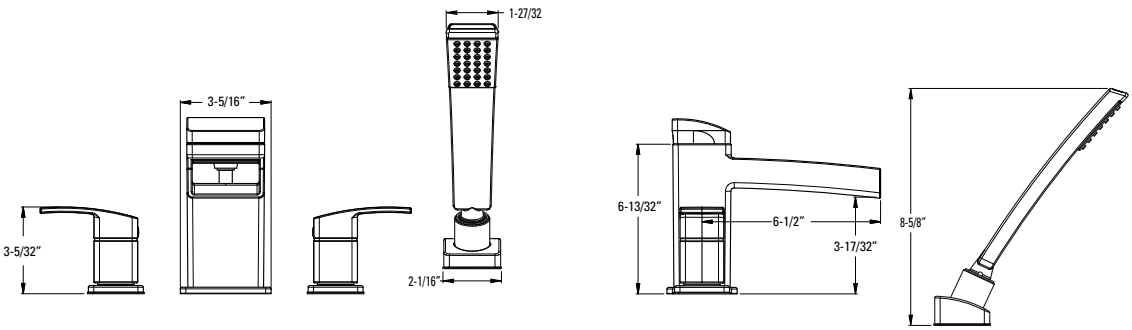

CEC Compliant | Cal Green Compliant | Meets EPA WaterSense℠ Standards | NSF Lead-Free Certified | ADA Compliant | UltraSeal™ | SecurePfit™

Pressure Balance Tub & Shower Trim

Model	Finish	Case Qty	List Price
LG89-8DFC	Polished Chrome	3	$322
LG89-8DFK	Brushed Nickel	3	$500
LG89-8DFB	Matte Black	3	$510

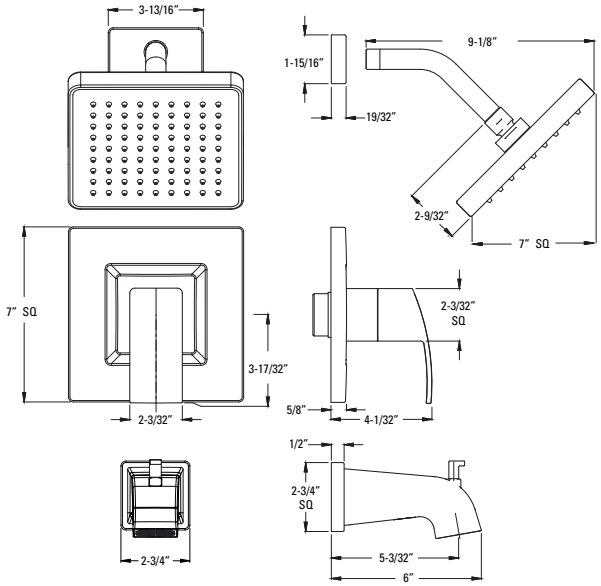

Technical Info

Features:
- SecurePfit™
- Metal Lever Handle
- Hot/Cold Indicator
- Decorative Raincan Showerhead
- Easy To Clean Spray Nozzles
- Quick Connect Metal Diverter Tub Spout
- Order 941-Ø55Ø for 1.5 gpm Showerhead Insert
- Showerhead 1.8 gpm @ 80 psi

Must Order Pressure Balance Rough in Valve Separately. See Valve Section.

Pressure Balance Shower Trim

LG89-7DFC	Polished Chrome	3	$241
LG89-7DFK	Brushed Nickel	3	$394
LG89-7DFB	Matte Black	3	$401

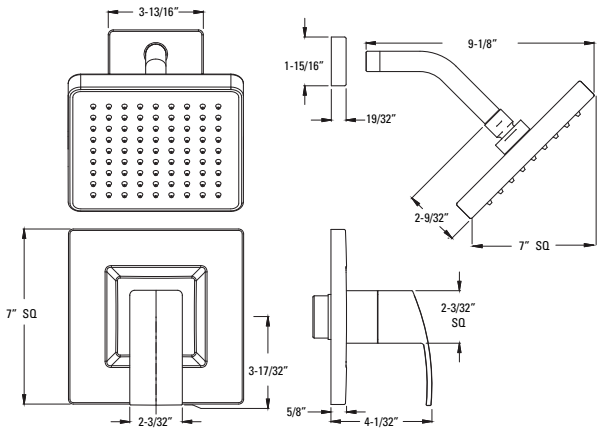

Features:
- SecurePfit™
- Metal Lever Handle
- Hot/Cold Indicator
- Decorative Raincan Showerhead
- Easy To Clean Spray Nozzles
- Order 941-Ø55Ø for 1.5 gpm Showerhead Insert
- Showerhead 1.8 gpm @ 80 psi

Must Order Pressure Balance Rough in Valve Separately. See Valve Section.

CEC Compliant | Cal Green Compliant | Meets EPA WaterSense℠ Standards | NSF Lead-Free Certified | ADA Compliant | UltraSeal™ | SecurePfit™

Pressure Balance Valve Only Trim

Model	Finish	Case Qty	List Price
R89-1DFC	Polished Chrome	3	$142
R89-1DFK	Brushed Nickel	3	$231
R89-1DFB	Matte Black	3	$235

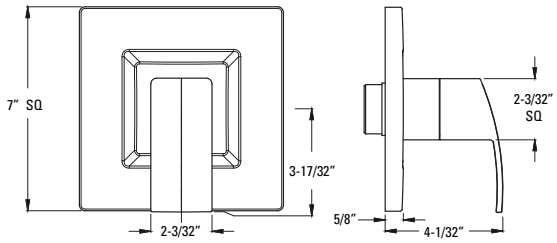

Technical Info

Features:
- SecurePfit™
- Metal Lever Handle
- Hot/Cold Indicator

Must Order Pressure Balance Rough in Valve Separately. See Valve Section.

1/2" Thermostatic Valve Only Trim

R89-2DFC	Polished Chrome	3	$266
R89-2DFK	Brushed Nickel	3	$356
R89-2DFB	Matte Black	3	$370

Available Spring 2018

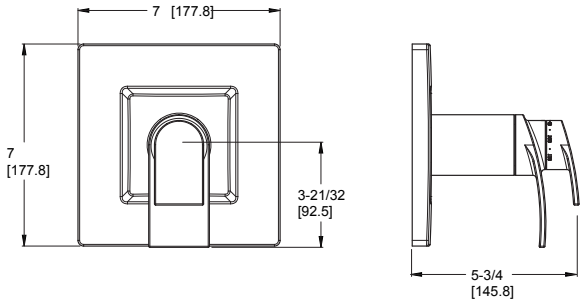

Features:
- SecurePfit™
- Metal Lever Handle
- Easy Install on Traditional Double Riser Tub Filler
- Wall or Overflow Connection Included
- Support System to Reduce Wobble

Must Order 1/2" Thermostatic Rough In Valve Separately. See Valve Section.

Diverter Trim Only

Ø16-DFØC	Polished Chrome	3	$102
Ø16-DFØK	Brushed Nickel	3	$141
Ø16-DFØB	Matte Black	3	$144

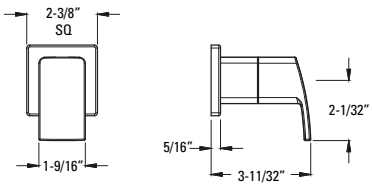

Features:
- SecurePfit™
- Metal Lever Handle and Matching Flange
- Can Be Used with Ø15-2WDX for Cal Green Compliant Applications

Must Order Ø15-4WDX or Ø15-2WDX Rough In Valve Separately. See Valve Section.

CEC Compliant | Cal Green Compliant | Meets EPA WaterSense℠ Standards | NSF Lead-Free Certified | ADA Compliant | UltraSeal™ | SecurePfit™

SHOWROOM PREFERRED

Slide Bar/Hand Shower Kit

Model	Finish	Case Qty	List Price
LG16-3DFC	Polished Chrome	3	$331
LG16-3DFK	Brushed Nickel	3	$440
LG16-3DFB	Matte Black	3	$513

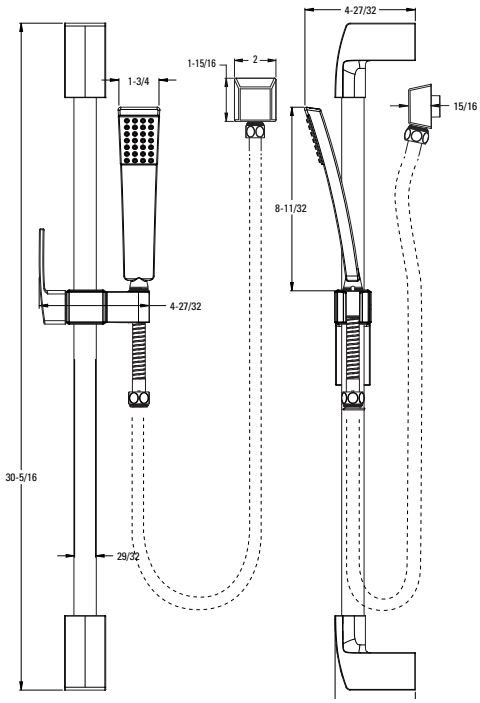

Technical Info

Features:
- Complete Slide Bar Package with Hand Held Shower, Hose, Drop Elbow, and Slide Bar
- Wall Mount Bracket and Drop Elbow
- Easy To Clean Spray Nozzles
- 60" Metal Hose with Matching Finish
- Back Flow Prevention
- Works with Kenzo Diverter Trim and Valve
- Not to be Used as a Grab Bar
- Hand Shower 1.8 gpm @ 80 psi

SHOWROOM preferred

Hand Shower Kit

LG16-1DFC	Polished Chrome	3	$186
LG16-1DFK	Brushed Nickel	3	$298
LG16-1DFB	Matte Black	3	$304

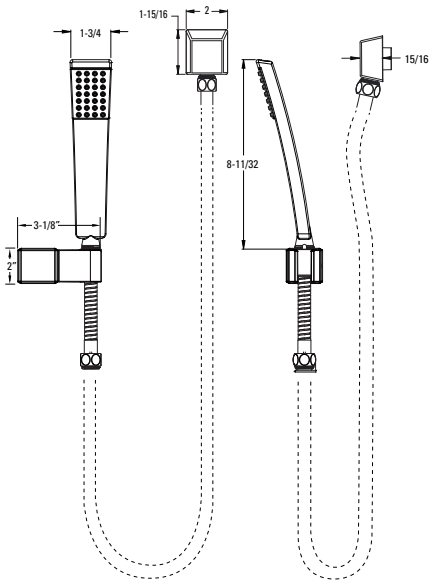

Features:
- Wall Mount Bracket and Drop Elbow
- Easy To Clean Spray Nozzles
- Metal Hose with Matching Finish
- Back Flow Prevention
- Hand Shower 1.8 gpm @ 80 psi

CEC Compliant | Cal Green Compliant | Meets EPA WaterSense℠ Standards | NSF Lead-Free Certified | ADA Compliant | UltraSeal™ | SecurePfit™

Raincan Showerhead

Model	Finish	Case Qty	List Price
973-228A	Polished Chrome	1	$78
973-228J	Brushed Nickel	1	$101
973-228B	Matte Black	1	$142

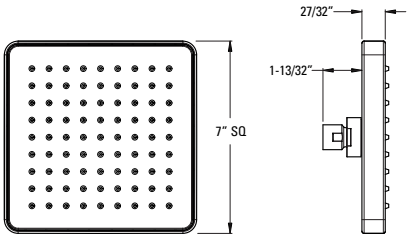

Technical Info

Features:
- Raincan Showerhead
- Easy To Clean Spray Nozzles
- Brass Ball Joint
- Shower Arm and Flange Sold Separately
- Order 941-Ø55Ø for 1.5 gpm Showerhead Insert
- Showerhead 1.8 gpm @ 80 psi

Shower Arm Flange

96Ø-Ø97A	Polished Chrome	1	$14
96Ø-Ø97J	Brushed Nickel	1	$18
96Ø-Ø97B	Matte Black	1	$16

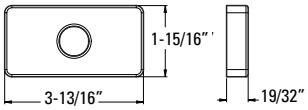

Features:
- All Metal
- Matches Kenzo Style & Finishes

Curved Shower Arm

973-Ø3ØA	Polished Chrome	1	$14
973-Ø3ØJ	Brushed Nickel	1	$15
973-Ø3ØB	Matte Black	1	$15

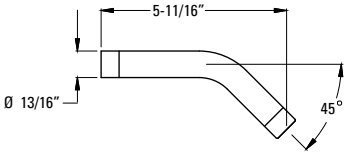

Features:
- Brass Shower Arm
- 1/2" NPT Male Connections

CEC Compliant | Cal Green Compliant | Meets EPA WaterSense℠ Standards | NSF Lead-Free Certified | ADA Compliant | UltraSeal™ | SecurePfit™

Tub Spout

Model	Finish	Case Qty	List Price
92Ø-623A	Polished Chrome	1	$81
92Ø-623J	Brushed Nickel	1	$92
92Ø-623B	Matte Black	1	$97

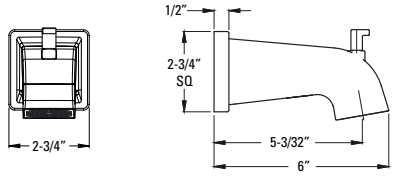

Technical Info

Features:
- All Metal
- IP & Quick Connect Diverted Spout

60" Hose

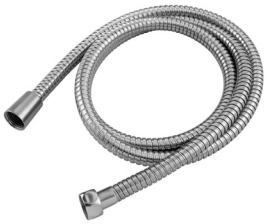

Ø16-18ØC	Polished Chrome	6	$40
Ø16-18ØK	Brushed Nickel	6	$95
Ø16-18ØB	Matte Black	6	$137

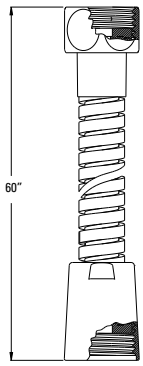

Features:
- 60" Anti-Twist Hose
- Matching Finish Metal Hose

Square Drop Elbow

Ø16-17FC	Polished Chrome	8	$34
Ø16-17FK	Brushed Nickel	8	$52
Ø16-17FB	Matte Black	8	$73

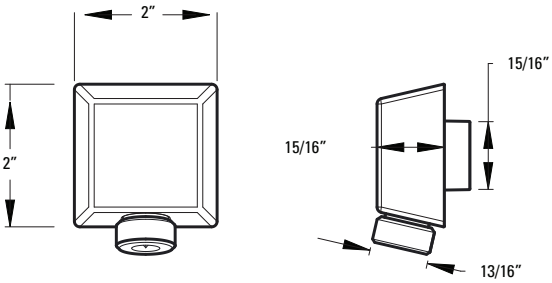

Features:
- 1/2" IP Connection
- Matching Finish

Kenzo™ - Accessories

18" Towel Bar

Model	Finish	Case Qty	List Price
BTB-DF1C	Polished Chrome	3	$100
BTB-DF1K	Brushed Nickel	3	$153
BTB-DF1B	Matte Black	3	$156

Technical Info

Holes: • 2-Hole

Features:
- Premium Metal Construction
- Superior Mounting Posts
- Concealed Screw Installation
- Mounting Hardware Included

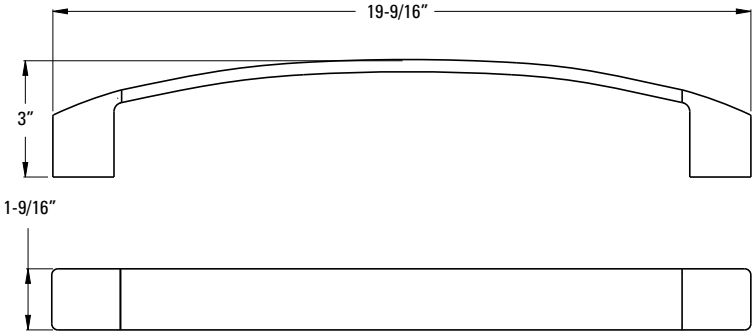

24" Towel Bar

BTB-DF2C	Polished Chrome	3	$123
BTB-DF2K	Brushed Nickel	3	$176
BTB-DF2B	Matte Black	3	$181

Holes: • 2-Hole

Features:
- Premium Metal Construction
- Superior Mounting Posts
- Concealed Screw Installation
- Mounting Hardware Included

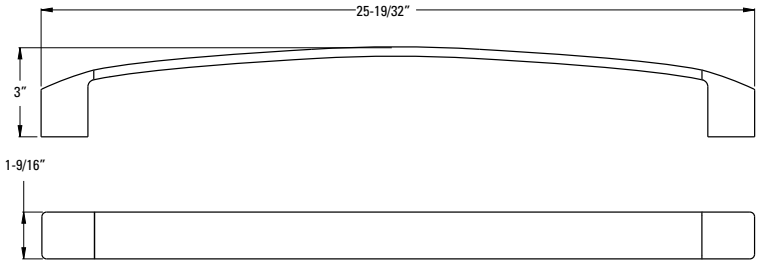

Towel Ring

BRB-DF1C	Polished Chrome	3	$95
BRB-DF1K	Brushed Nickel	3	$134
BRB-DF1B	Matte Black	3	$136

Holes: • 2-Hole

Features:
- Premium Metal Construction
- Superior Mounting Posts
- Concealed Screw Installation
- Mounting Hardware Included

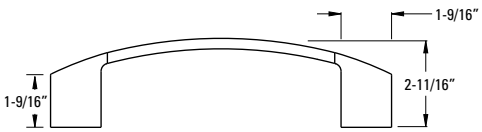

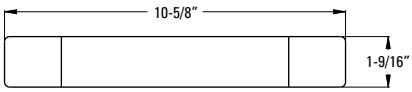

SHOWROOM PREFERRED

Paper Holder

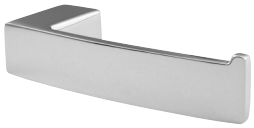

Model	Finish	Case Qty	List Price
BPH-DF1C	Polished Chrome	3	$77
BPH-DF1K	Brushed Nickel	3	$111
BPH-DF1B	Matte Black	3	$112

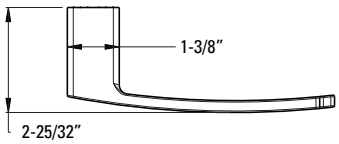

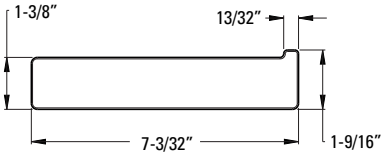

Technical Info

Holes: • 1-Hole

Features:
- Premium Metal Construction
- Superior Mounting Posts
- Concealed Screw Installation
- Mounting Hardware Included

Robe Hook

Model	Finish	Case Qty	List Price
BRH-DF1C	Polished Chrome	3	$59
BRH-DF1K	Brushed Nickel	3	$86
BRH-DF1B	Matte Black	3	$87

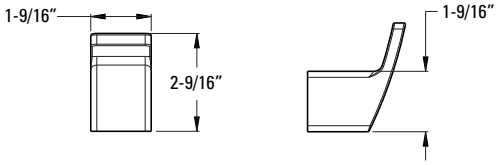

Technical Info

Holes: • 1-Hole

Features:
- Premium Metal Construction
- Superior Mounting Posts
- Concealed Screw Installation
- Mounting Hardware Included

ASHFIELD

Single Control Vessel Lavatory
LG4Ø-YPØC

Single Control Lavatory
LG42-YPØC

8" Widespread Lavatory
LG49-YP1C

Diverter Trim
Ø16-YPØC

3-Hole Roman Tub
RT6-5YPC, HHL-YPLC

Tub & Shower
LG89-8YPC

Shower Only
LG89-7YPC

Valve Only
R89-1YPC

Accessories

24" Towel Bar
BTB-YP2C

24" Double Towel Bar
BTB-YP5C

Towel Hook
BRB-YPØC

Paper Holder
BPH-YP1C

Robe Hook
BRH-YPØC

Ashfield® - Lavatory Faucets

Single Control Vessel Lavatory

Model	Finish	Case Qty	List Price
LG4Ø-YPØC	Polished Chrome	3	$390
LG4Ø-YPØK	Brushed Nickel	3	$445
LG4Ø-YPØY	Tuscan Bronze	3	$473
LG4Ø-YPØU	Rustic Bronze	3	$467

Technical Info

Holes: • 1-Hole Installation

Features:
- Ceramic Disc Valve
- Metal Lever Handle
- Single Post Mounting Ring
- Grid Strainer Sold Separately
- 1.2 gpm @ 60 psi

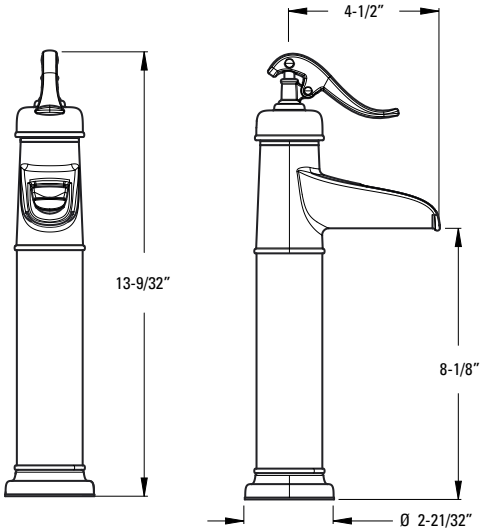

Single Control Lavatory

Model	Finish	Case Qty	List Price
LG42-YPØC	Polished Chrome	3	$292
LG42-YPØK	Brushed Nickel	3	$378
LG42-YPØY	Tuscan Bronze	3	$416
LG42-YPØU	Rustic Bronze	3	$404

Holes: • 1 or 3-Hole 4" Installation

Features:
- Ceramic Disc Valve
- Metal Lever Handle
- Single Post Mounting Ring
- 3-Hole Deckplate Included
- All Metal Pop-Up
- 1.2 gpm @ 60 psi

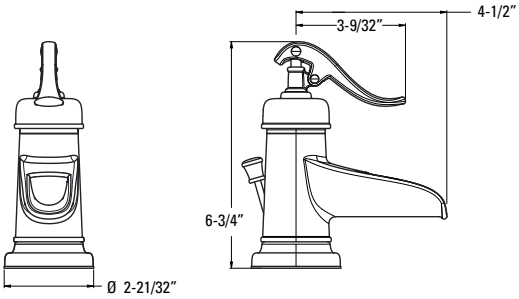

CEC Compliant | Cal Green Compliant | Meets EPA WaterSense℠ Standards | NSF Lead-Free Certified | ADA Compliant | UltraSeal™ | SecurePfit™

8" Widespread Lavatory

Model	Finish	Case Qty	List Price
LG49-YP1C	Polished Chrome	3	$416
LG49-YP1K	Brushed Nickel	3	$508
LG49-YP1Y	Tuscan Bronze	3	$569
LG49-YP1U	Rustic Bronze	3	$560

Technical Info

Holes: • 3-Hole 8-15" Installation

Features:
- Ceramic Disc Valves
- Metal Lever Handles
- Fixed Spout
- Quick Connect Hose Assembly
- All Metal Pop-Up
- Extension Kit Available 971-Ø86Ø
- 1.2 gpm @ 60 psi

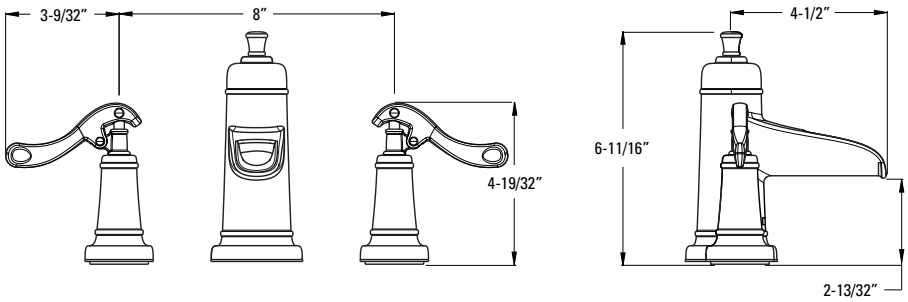

Grid Strainer

T47-9GSC	Polished Chrome	6	$44
T47-9GSK	Brushed Nickel	6	$50
T47-9GSY	Tuscan Bronze	6	$56
T47-9GSU	Rustic Bronze	6	$62

Features:
- All Metal Grid Strainer
- With Overflow
- 1 1/4" Tailpiece

Grid Strainer

T47-7GLC	Polished Chrome	6	$44
T47-7GLK	Brushed Nickel	6	$50
T47-7GLY	Tuscan Bronze	6	$56
T47-7GLU	Rustic Bronze	6	$62

Features:
- All Metal Grid Strainer
- No Overflow
- 1 1/4" Tailpiece

CEC Compliant | Cal Green Compliant | Meets EPA WaterSense℠ Standards | NSF Lead-Free Certified | ADA Compliant | UltraSeal™ | SecurePfit™

Ashfield® - Tub Fillers

Roman Tub Trim

Model	Finish	Case Qty	List Price
RT6-5YPC	Polished Chrome	3	$583
RT6-5YPK	Brushed Nickel	3	$767
RT6-5YPY	Tuscan Bronze	3	$813
RT6-5YPU	Rustic Bronze	3	$806

Technical Info

Holes: • 3-Hole

Features:
- Ceramic Disc Valves
- Fixed Spout
- Handles Sold Separately (HHL Kit)

Must Order ØX6-Ø5ØR or ØX6-15ØR Rough In Valve Separately. See Valve Section.

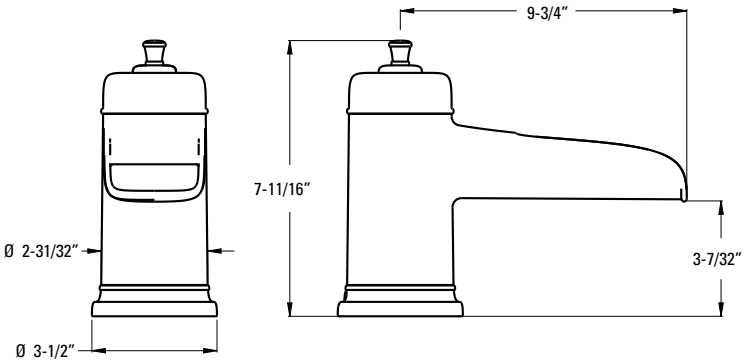

Handle Kit

HHL-YPLC	Polished Chrome	16	$78
HHL-YPLK	Brushed Nickel	16	$97
HHL-YPLY	Tuscan Bronze	16	$116
HHL-YPLU	Rustic Bronze	16	$107

Features:
- Metal Lever Handles
- Kit Includes 2 Handles
- For Lavatory and Roman Tub Applications

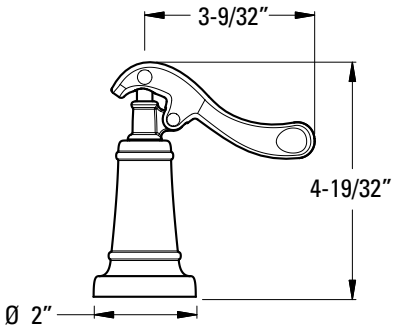

CEC Compliant | Cal Green Compliant | Meets EPA WaterSense℠ Standards | NSF Lead-Free Certified | ADA Compliant | UltraSeal™ | SecurePfit™

Pressure Balance Tub & Shower Trim

Model	Finish	Case Qty	List Price
LG89-8YPC	Polished Chrome	3	$232
LG89-8YPK	Brushed Nickel	3	$414
LG89-8YPY	Tuscan Bronze	3	$518
LG89-8YPU	Rustic Bronze	3	$513

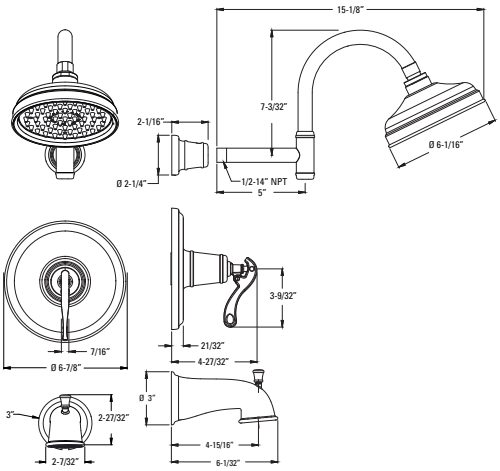

Technical Info

Features:
- SecurePfit™
- Metal Lever Handle
- Hot/Cold Indicator
- Decorative Raincan Showerhead
- Easy To Clean Spray Nozzles
- IP Threaded Metal Diverter Tub Spout
- Order 941-Ø55Ø for 1.5 gpm Showerhead Insert
- Showerhead 1.8 gpm @ 80 psi

Must Order Pressure Balance Rough in Valve Separately. See Valve Section.

Pressure Balance Shower Trim

LG89-7YPC	Polished Chrome	3	$184
LG89-7YPK	Brushed Nickel	3	$292
LG89-7YPY	Tuscan Bronze	3	$430
LG89-7YPU	Rustic Bronze	3	$484

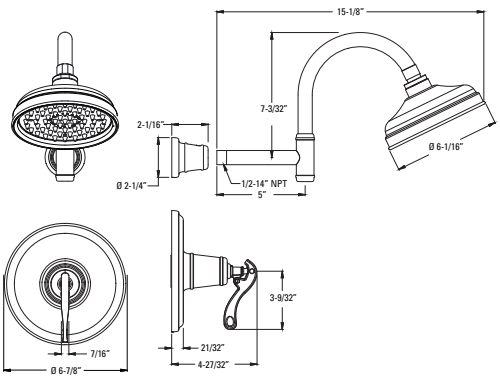

Features:
- SecurePfit™
- Metal Lever Handle
- Hot/Cold Indicator
- Decorative Raincan Showerhead
- Easy To Clean Spray Nozzles
- Order 941-Ø55Ø for 1.5 gpm Showerhead Insert
- Showerhead 1.8 gpm @ 80 psi

Must Order Pressure Balance Rough in Valve Separately. See Valve Section.

CEC Compliant | Cal Green Compliant | Meets EPA WaterSense℠ Standards | NSF Lead-Free Certified | ADA Compliant | UltraSeal™ | SecurePfit™

	Model	Finish	Case Qty	List Price
Pressure Balance Valve Only Trim	R89-1YPC	Polished Chrome	3	$109
	R89-1YPK	Brushed Nickel	3	$192
	R89-1YPY	Tuscan Bronze	3	$253
	R89-1YPU	Rustic Bronze	3	$283

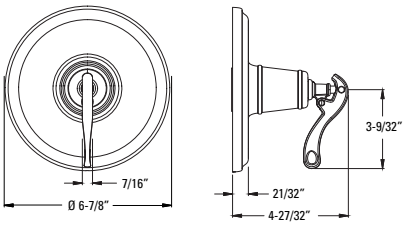

Technical Info

Features:
- SecurePfit™
- Metal Lever Handle
- Hot/Cold Indicator

Must Order Pressure Balance Rough in Valve Separately. See Valve Section.

Diverter Trim Only	Ø16-YPØC	Polished Chrome	3	$87
	Ø16-YPØK	Brushed Nickel	3	$126
	Ø16-YPØY	Tuscan Bronze	3	$186
	Ø16-YPØU	Rustic Bronze	3	$193

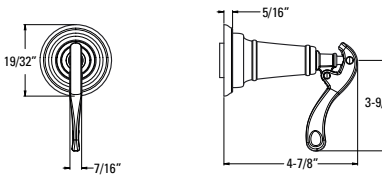

Features:
- SecurePfit™
- Metal Lever Handle and Matching Flange
- Can Be Used With Ø15-2WDX for Cal Green Compliant Applications

Must Order Ø15-4WDX or Ø15-2WDX Rough In Valve Separately. See Valve Section.

24" Towel Bar

Model	Finish	Case Qty	List Price
BTB-YP2C	Polished Chrome	4	$67
BTB-YP2K	Brushed Nickel	4	$103
BTB-YP2Y	Tuscan Bronze	4	$107
BTB-YP2U	Rustic Bronze	4	$107

Technical Info

Holes: • 2-Hole

Features:
- Premium Metal Construction
- Superior Mounting Posts
- Concealed Screw Installation
- Mounting Hardware Included

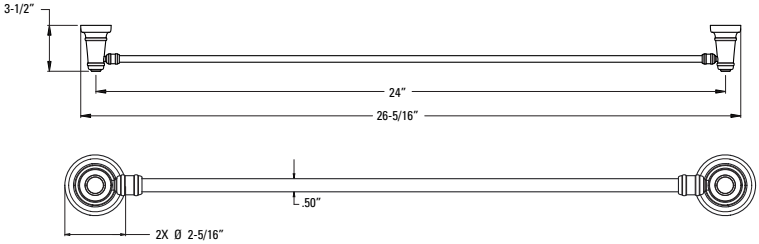

24" Double Towel Bar

Model	Finish	Case Qty	List Price
BTB-YP5C	Polished Chrome	4	$124
BTB-YP5K	Brushed Nickel	4	$190
BTB-YP5Y	Tuscan Bronze	4	$210
BTB-YP5U	Rustic Bronze	4	$190

Holes: • 2-Hole

Features:
- Premium Metal Construction
- Superior Mounting Posts
- Concealed Screw Installation
- Mounting Hardware Included

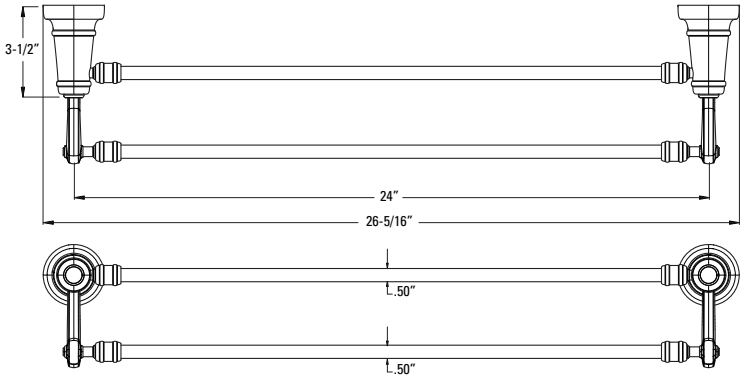

Ashfield® - Accessories

Towel Hook

Model	Finish	Case Qty	List Price
BRB-YPØC	Polished Chrome	4	$49
BRB-YPØK	Brushed Nickel	4	$73
BRB-YPØY	Tuscan Bronze	4	$78
BRB-YPØU	Rustic Bronze	4	$78

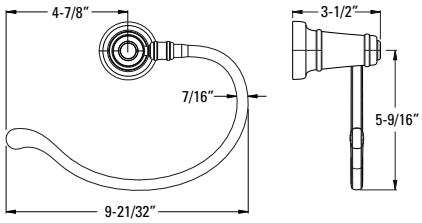

Technical Info

Holes: • 1-Hole

Features:
- Premium Metal Construction
- Superior Mounting Posts
- Concealed Screw Installation
- Mounting Hardware Included

Paper Holder

BPH-YP1C	Polished Chrome	4	$53
BPH-YP1K	Brushed Nickel	4	$79
BPH-YP1Y	Tuscan Bronze	4	$80
BPH-YP1U	Rustic Bronze	4	$97

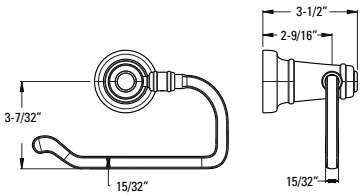

Holes: • 1-Hole

Features:
- Premium Metal Construction
- Superior Mounting Posts
- Concealed Screw Installation
- Mounting Hardware Included

Robe Hook

BRH-YPØC	Polished Chrome	4	$31
BRH-YPØK	Brushed Nickel	4	$44
BRH-YPØY	Tuscan Bronze	4	$50
BRH-YPØU	Rustic Bronze	4	$46

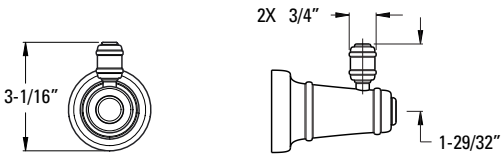

Holes: • 1-Hole

Features:
- Premium Metal Construction
- Superior Mounting Posts
- Concealed Screw Installation
- Mounting Hardware Included

ARTERRA

Single Control Vessel Lavatory
LG4Ø-DEØC

Single Control Lavatory
LG42-DEØC

8" Widespread Lavatory
LG49-DEØC

3-Hole Roman Tub
RT6-5DEC

4-Hole Roman Tub
LG6-4DEC

Diverter Trim
Ø16-DE1C

Tub & Shower
LG89-8DEC

Shower Only
LG89-7DEC

Valve Only
R89-1DEC

Slide Bar/
Hand Shower Kit
LG16-3DEC

Accessories

18" & 24" Towel Bar
BTB-DE1C & BTB-DE2C

Towel Ring
BRB-DEØC

Paper Holder
BPH-DEØC

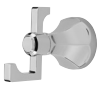

Robe Hook
BRH-DEØC

Single Control Vessel Lavatory

Model	Finish	Case Qty	List Price
LG4Ø-DEØC	Polished Chrome	3	$327
LG4Ø-DEØK	Brushed Nickel	3	$440
LG4Ø-DEØD	Polished Nickel	3	$440
LG4Ø-DEØY	Tuscan Bronze	3	$451

Technical Info

Holes: • 1-Hole Installation

Features:
- Ceramic Disc Valve
- Metal Lever Handle
- Single Post Mounting Ring
- Grid Strainer Sold Separately
- 1.2 gpm @ 60 psi

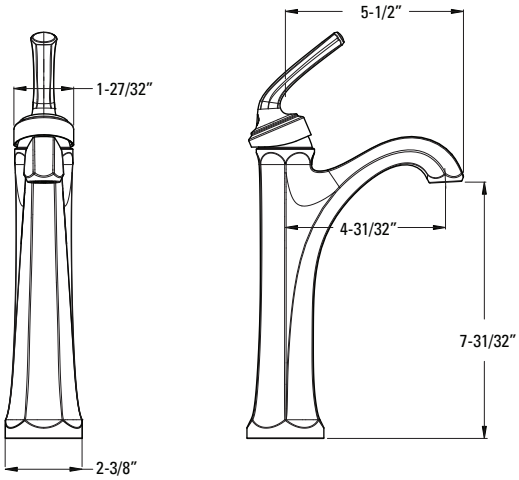

Single Control Lavatory

LG42-DEØC	Polished Chrome	3	$255
LG42-DEØK	Brushed Nickel	3	$358
LG42-DEØD	Polished Nickel	3	$358
LG42-DEØY	Tuscan Bronze	3	$378

Holes: • 1 or 3-Hole 4" Installation

Features:
- Ceramic Disc Valve
- Metal Lever Handle
- Single Post Mounting Ring
- 3-Hole Deckplate Sold Separately 961-146*
- All Metal Pop-Up
- 1.2 gpm @ 60 psi

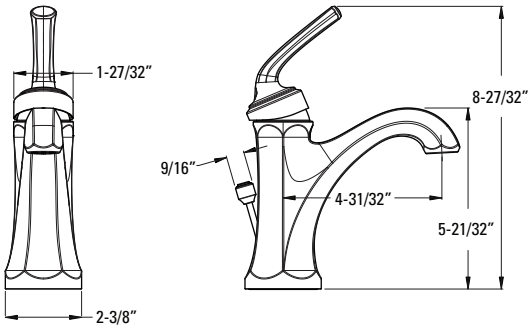

CEC Compliant | Cal Green Compliant | Meets EPA WaterSense℠ Standards | NSF Lead-Free Certified | ADA Compliant | UltraSeal™ | SecurePfit™

8" Widespread Lavatory

Model	Finish	Case Qty	List Price
LG49-DEØC	Polished Chrome	3	$341
LG49-DEØK	Brushed Nickel	3	$430
LG49-DEØD	Polished Nickel	3	$430
LG49-DEØY	Tuscan Bronze	3	$476

Technical Info

Holes: • 3-Hole 8-15" Installation

Features:
- Ceramic Disc Valves
- Metal Lever Handles
- Fixed Spout
- Quick Connect Hose Assembly
- All Metal Pop-Up
- 1.2 gpm @ 60 psi

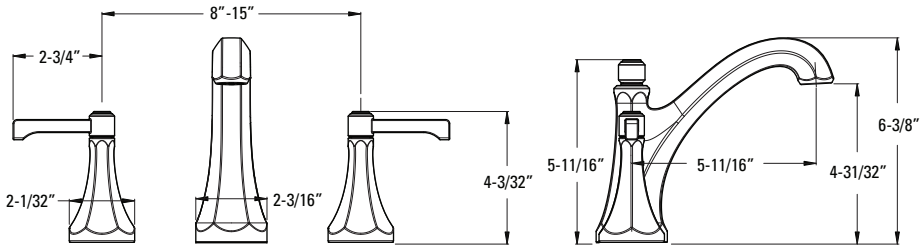

Universal Grid Strainer

T47-9GSC	Polished Chrome	6	$44
T47-9GSK	Brushed Nickel	6	$50
T47-9GSD	Polished Nickel	6	$50
T47-9GSY	Tuscan Bronze	6	$56

Features:
- All Metal Grid Strainer
- With Overflow
- 1 1/4" Tailpiece

Universal Grid Strainer

T47-7GLC	Polished Chrome	6	$44
T47-7GLK	Brushed Nickel	6	$50
T47-7GLD	Polished Nickel	6	$50
T47-7GLY	Tuscan Bronze	6	$56

Features:
- All Metal Grid Strainer
- No Overflow
- 1 1/4" Tailpiece

CEC Compliant | Cal Green Compliant | Meets EPA WaterSense℠ Standards | NSF Lead-Free Certified | ADA Compliant | UltraSeal™ | SecurePfit™

Roman Tub Trim

Model	Finish	Case Qty	List Price
RT6-5DEC	Polished Chrome	3	$393
RT6-5DEK	Brushed Nickel	3	$486
RT6-5DED	Polished Nickel	3	$486
RT6-5DEY	Tuscan Bronze	3	$527

Technical Info

Holes: • 3-Hole

Features: • Ceramic Disc Valves
• Fixed Spout

Must Order ØX6-Ø5ØR or ØX6-15ØR Rough In Valve Separately. See Valve Section.

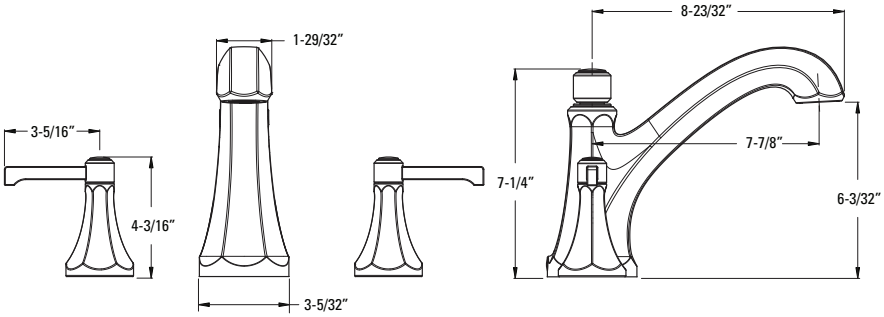

Roman Tub Trim with Hand Shower

LG6-4DEC	Polished Chrome	3	$507
LG6-4DEK	Brushed Nickel	3	$589
LG6-4DED	Polished Nickel	3	$589
LG6-4DEY	Tuscan Bronze	3	$631

Holes: • 4-Hole

Features: • Ceramic Disc Valves
• Fixed Spout
• Hand Shower 1.8 gpm @ 80psi

Must Order ØX6-44ØR Rough In Valve Separately. See Valve Section.

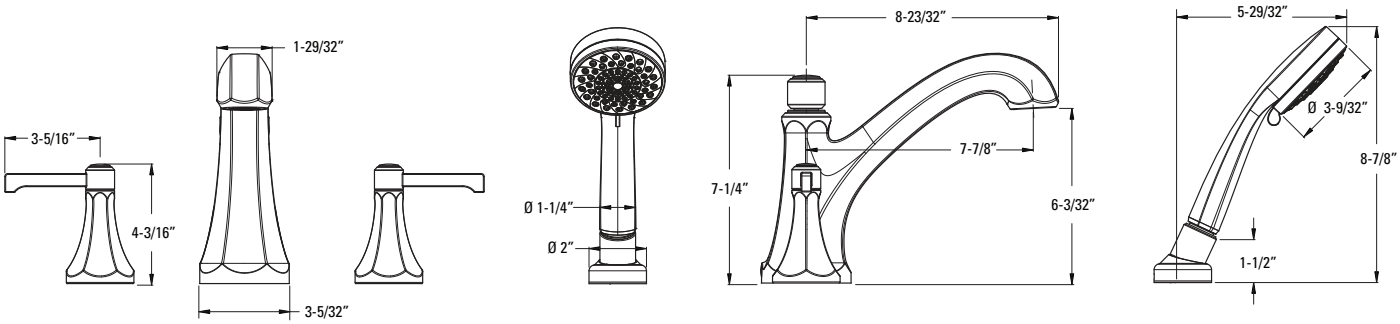

CEC Compliant | Cal Green Compliant | Meets EPA WaterSense℠ Standards | NSF Lead-Free Certified | ADA Compliant | UltraSeal™ | SecurePfit™

Pressure Balance Tub & Shower Trim

Model	Finish	Case Qty	List Price
LG89-8DEC	Polished Chrome	3	$327
LG89-8DEK	Brushed Nickel	3	$404
LG89-8DED	Polished Nickel	3	$404
LG89-8DEY	Tuscan Bronze	3	$456

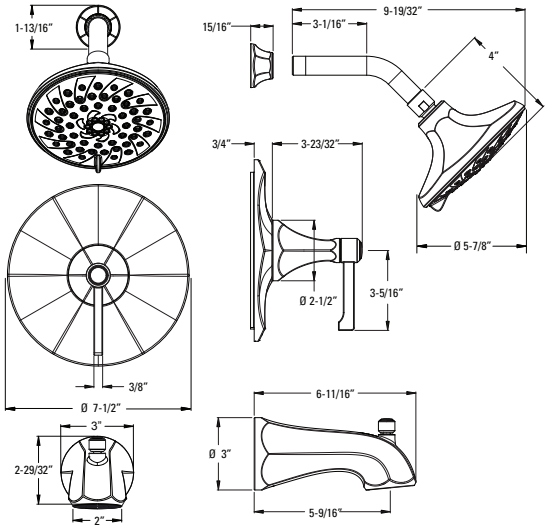

Technical Info

Features:
- SecurePfit™
- Metal Lever Handle
- Hot/Cold Indicator
- Decorative 5-Function Showerhead
- Easy To Clean Spray Nozzles
- IP Threaded Metal Diverter Tub Spout
- Order 941-Ø55 for 1.5 gpm Showerhead Insert
- Showerhead 1.8 gpm @ 80 psi

Must Order Pressure Balance Rough in Valve Separately. See Valve Section.

Pressure Balance Shower Trim

LG89-7DEC	Polished Chrome	3	$254
LG89-7DEK	Brushed Nickel	3	$327
LG89-7DED	Polished Nickel	3	$327
LG89-7DEY	Tuscan Bronze	3	$389

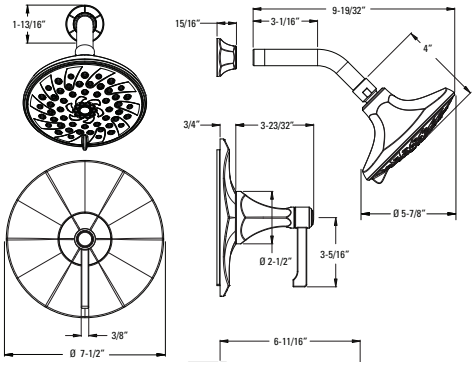

Features:
- SecurePfit™
- Metal Lever Handle
- Hot/Cold Indicator
- Decorative 5-Function Showerhead
- Easy To Clean Spray Nozzles
- Order 941-Ø55 for 1.5 gpm Showerhead Insert
- Showerhead 1.8 gpm @ 80 psi

Must Order Pressure Balance Rough in Valve Separately. See Valve Section.

CEC Compliant | Cal Green Compliant | Meets EPA WaterSense℠ Standards | NSF Lead-Free Certified | ADA Compliant | UltraSeal™ | SecurePfit™

Pressure Balance Valve Only Trim

Model	Finish	Case Qty	List Price
R89-1DEC	Polished Chrome	3	$143
R89-1DEK	Brushed Nickel	3	$187
R89-1DED	Polished Nickel	3	$187
R89-1DEY	Tuscan Bronze	3	$218

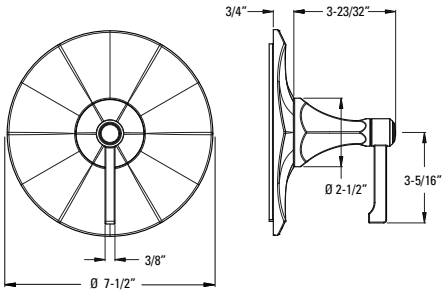

Technical Info

Features:
- SecurePfit™
- Metal Lever Handle
- Hot/Cold Indicator

Must Order Pressure Balance Rough in Valve Separately. See Valve Section.

Diverter Trim Only

Ø16-DE1C	Polished Chrome	3	$106
Ø16-DE1K	Brushed Nickel	3	$125
Ø16-DE1D	Polished Nickel	3	$125
Ø16-DE1Y	Tuscan Bronze	3	$145

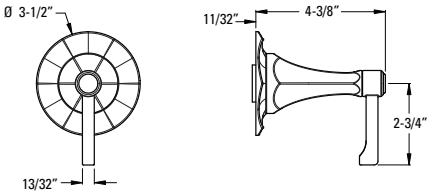

Features:
- SecurePfit™
- Metal Lever Handle and Matching Flange
- Can Be Used With Ø15-2WDX for Cal Green Compliant Applications

Must Order Ø15-4WDX or Ø15-2WDX Rough In Valve Separately. See Valve Section.

CEC Compliant | Cal Green Compliant | Meets EPA WaterSense℠ Standards | NSF Lead-Free Certified | ADA Compliant | UltraSeal™ | SecurePfit™

SHOWROOM PREFERRED

Slide Bar/Hand Shower Kit

Model	Finish	Case Qty	List Price
LG16-3DEC	Polished Chrome	3	$306
LG16-3DEK	Brushed Nickel	3	$409
LG16-3DED	Polished Nickel	3	$409
LG16-3DEY	Tuscan Bronze	3	$482

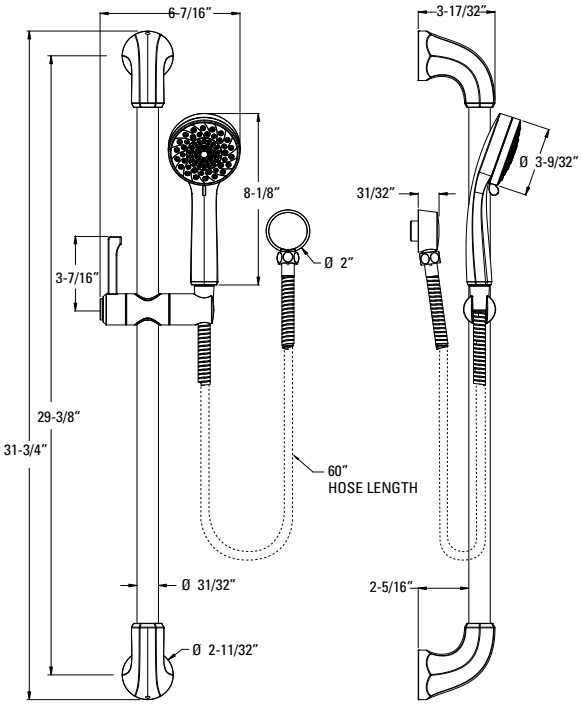

Technical Info

Features:
- Complete Slide Bar Package with Hand Shower, Hose, Drop Elbow, and Slide Bar
- Multi-Function Handheld
- Easy To Clean Spray Nozzles
- All Metal Slide Bar
- Metal Hose with Matching Finish
- Back Flow Prevention
- Works with Arterra Diverter Trim and Valve
- Not to be Used as a Grab Bar
- Hand Shower 1.8 gpm @ 80 psi

CEC Compliant | Cal Green Compliant | Meets EPA WaterSense℠ Standards | NSF Lead-Free Certified | ADA Compliant | UltraSeal™ | SecurePfit™

18" Towel Bar

Model	Finish	Case Qty	List Price
BTB-DE1C	Polished Chrome	3	$85
BTB-DE1K	Brushed Nickel	3	$96
BTB-DE1D	Polished Nickel	3	$96
BTB-DE1Y	Tuscan Bronze	3	$109

Technical Info

Holes: • 2-Hole

Features:
- Premium Metal Construction
- Superior Mounting Posts
- Concealed Screw Installation
- Mounting Hardware Included

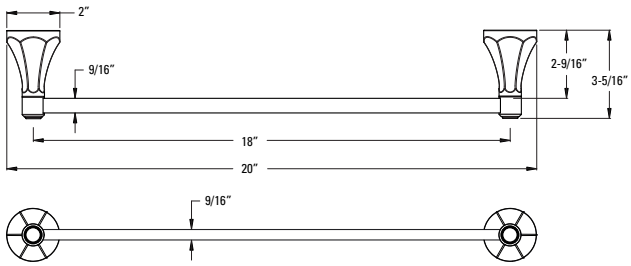

24" Towel Bar

Model	Finish	Case Qty	List Price
BTB-DE2C	Polished Chrome	3	$99
BTB-DE2K	Brushed Nickel	3	$109
BTB-DE2D	Polished Nickel	3	$109
BTB-DE2Y	Tuscan Bronze	3	$125

Holes: • 2-Hole

Features:
- Premium Metal Construction
- Superior Mounting Posts
- Concealed Screw Installation
- Mounting Hardware Included

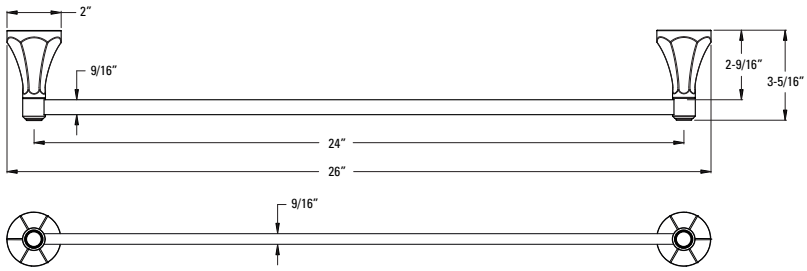

Towel Hook

Model	Finish	Case Qty	List Price
BRB-DEØC	Polished Chrome	3	$65
BRB-DEØK	Brushed Nickel	3	$80
BRB-DEØD	Polished Nickel	3	$80
BRB-DEØY	Tuscan Bronze	3	$91

Holes: • 1-Hole

Features:
- Premium Metal Construction
- Superior Mounting Posts
- Concealed Screw Installation
- Mounting Hardware Included

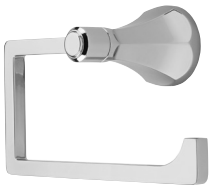

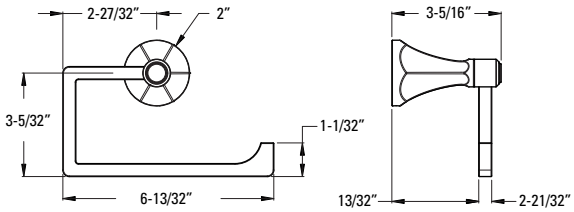

SHOWROOM PREFERRED

Paper Holder

Model	Finish	Case Qty	List Price
BPH-DEØC	Polished Chrome	3	$65
BPH-DEØK	Brushed Nickel	3	$80
BPH-DEØD	Polished Nickel	3	$80
BPH-DEØY	Tuscan Bronze	3	$93

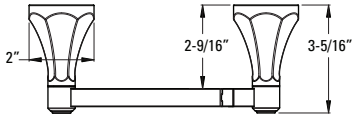

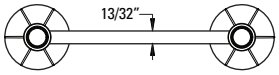

Technical Info

Holes: • 2-Hole

Features:
- Premium Metal Construction
- Superior Mounting Posts
- Concealed Screw Installation
- Mounting Hardware Included
- Swivel Mount Paper Holder

Robe Hook

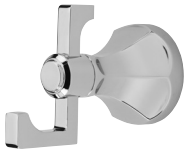

BRH-DEØC	Polished Chrome	3	$34
BRH-DEØK	Brushed Nickel	3	$38
BRH-DEØD	Polished Nickel	3	$38
BRH-DEØY	Tuscan Bronze	3	$44

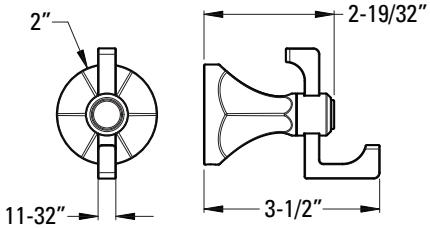

Holes: • 1-Hole

Features:
- Premium Metal Construction
- Superior Mounting Posts
- Concealed Screw Installation
- Mounting Hardware Included

MARIELLE

4" Mini-Widespread
LG46-MØBC

8" Widespread Lavatory
LG49-MØBC

3-Hole Roman Tub
RT6-5MXC, HHL-MØBC

Diverter Trim
Ø16-MBØC

Tub & Shower
LG89-8MBC

Shower Only
LG89-7MBC

Valve Only
R89-1MBC

Accessories

18" & 24" Towel Bar
BTB-MB1C & BTB-MB2C

Towel Hook
BRB-MB1C

Paper Holder
BPH-MB1C

Robe Hook
BRH-MB1C

4" Centerset/Mini-Widespread Lavatory

Model	Finish	Case Qty	List Price
LG46-MØBC	Polished Chrome	3	$288
LG46-MØBK	Brushed Nickel	3	$386
LG46-MØBD	Polished Nickel	3	$386
LG46-MØBY	Tuscan Bronze	3	$414

Technical Info

Holes: • 3-Hole 4" Installation

Features:
- Ceramic Disc Valves
- Metal Lever Handles
- Fixed Spout
- 3-Hole Deckplate
- Install without Deckplate for Mini-Widespread Appearance
- All Metal Pop-Up
- 1.2 gpm @ 60 psi

4" Centerset

4" Mini-Widespread

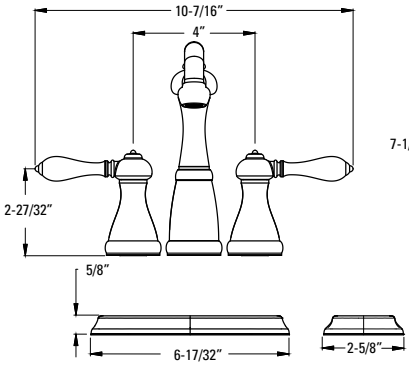

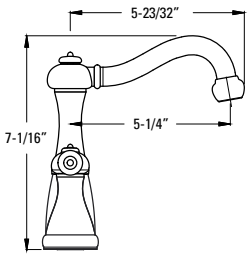

8" Widespread Lavatory

LG49-MØBC	Polished Chrome	3	$394
LG49-MØBK	Brushed Nickel	3	$509
LG49-MØBD	Polished Nickel	3	$509
LG49-MØBY	Tuscan Bronze	3	$541

Holes: • 3-Hole 8-15" Installation

Features:
- Ceramic Disc Valves
- Metal Lever Handles
- Fixed Spout
- Quick Connect Hose Assembly
- All Metal Pop-Up
- Order 971-Ø86Ø to Increase Max. Install Depth to 3"
- 1.2 gpm @ 60 psi

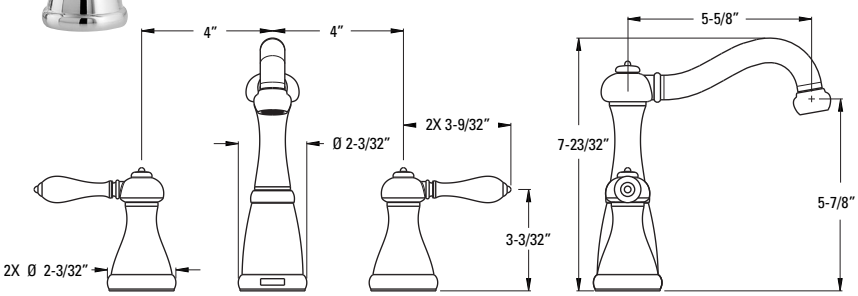

CEC Compliant | Cal Green Compliant | Meets EPA WaterSense℠ Standards | NSF Lead-Free Certified | ADA Compliant | UltraSeal™ | SecurePfit™

Roman Tub Trim

Model	Finish	Case Qty	List Price
RT6-5MXC	Polished Chrome	3	$339
RT6-5MXK	Brushed Nickel	3	$505
RT6-5MXD	Polished Nickel	3	$505
RT6-5MXY	Tuscan Bronze	3	$572

Technical Info

Holes: • 3-Hole

Features:
- Ceramic Disc Valves
- Fixed Spout
- Handles Sold Separately (HHL Kit)

Must Order ØX6-Ø5ØR or ØX6-15ØR Rough In Valve Separately. See Valve Section.

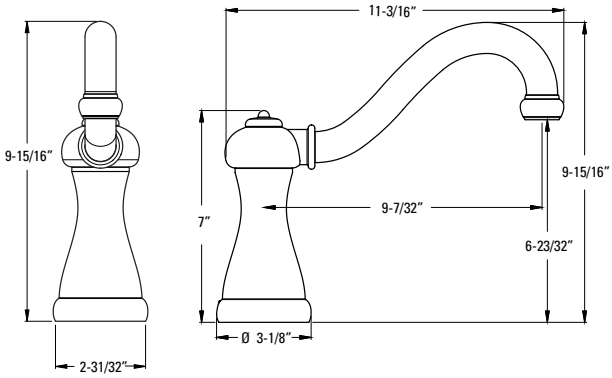

Handle Kit

HHL-MØBC	Polished Chrome	16	$65
HHL-MØBK	Brushed Nickel	16	$99
HHL-MØBD	Polished Nickel	16	$99
HHL-MØBY	Tuscan Bronze	16	$115

Features:
- Metal Lever Handles
- Kit Includes 2 Handles
- For Lavatory and Roman Tub Applications

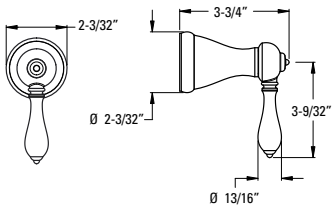

CEC Compliant | Cal Green Compliant | Meets EPA WaterSense℠ Standards | NSF Lead-Free Certified | ADA Compliant | UltraSeal™ | SecurePfit™

Pressure Balance Tub & Shower Trim

Model	Finish	Case Qty	List Price
LG89-8MBC	Polished Chrome	3	$206
LG89-8MBK	Brushed Nickel	3	$349
LG89-8MBD	Polished Nickel	3	$349
LG89-8MBY	Tuscan Bronze	3	$376

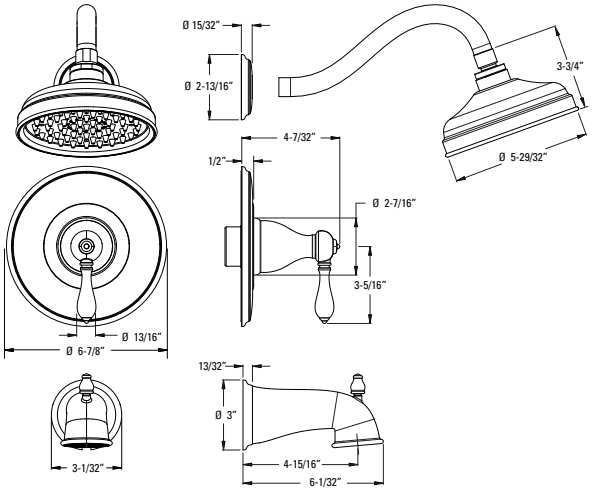

Technical Info

Features:
- SecurePfit™
- Metal Lever Handle
- Hot/Cold Indicator
- Decorative Raincan Showerhead
- Easy To Clean Spray Nozzles
- IP Threaded Metal Diverter Tub Spout
- Order 941-Ø55Ø for 1.5 gpm Showerhead Insert
- Showerhead 1.8 gpm @ 80 psi

Must Order Pressure Balance Rough in Valve Separately. See Valve Section.

Pressure Balance Shower Trim

LG89-7MBC	Polished Chrome	3	$144
LG89-7MBK	Brushed Nickel	3	$305
LG89-7MBD	Polished Nickel	3	$305
LG89-7MBY	Tuscan Bronze	3	$323

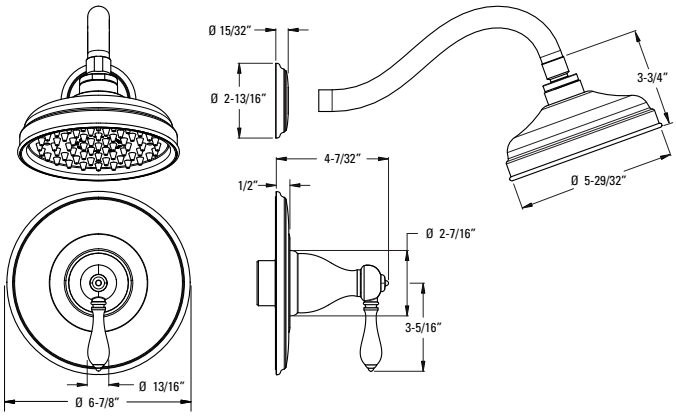

Features:
- SecurePfit™
- Metal Lever Handle
- Hot/Cold Indicator
- Decorative Raincan Showerhead
- Easy To Clean Spray Nozzles
- Order 941-Ø55Ø for 1.5 gpm Showerhead Insert
- Showerhead 1.8 gpm @ 80 psi

Must Order Pressure Balance Rough in Valve Separately. See Valve Section.

CEC Compliant | Cal Green Compliant | Meets EPA WaterSense℠ Standards | NSF Lead-Free Certified | ADA Compliant | UltraSeal™ | SecurePfit™

Pressure Balance Valve Only Trim

Model	Finish	Case Qty	List Price
R89-1MBC	Polished Chrome	3	$95
R89-1MBK	Brushed Nickel	3	$176
R89-1MBD	Polished Nickel	3	$176
R89-1MBY	Tuscan Bronze	3	$209

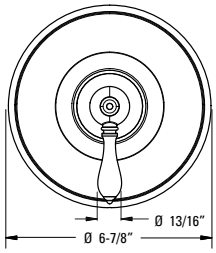

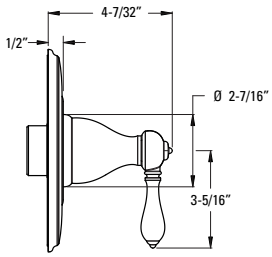

Technical Info

Features:
- SecurePfit™
- Metal Lever Handle
- Hot/Cold Indicator

Must Order Pressure Balance Rough in Valve Separately. See Valve Section.

Diverter Trim Only

Ø16-MBØC	Polished Chrome	3	$86
Ø16-MBØK	Brushed Nickel	3	$121
Ø16-MBØD	Polished Nickel	3	$121
Ø16-MBØY	Tuscan Bronze	3	$180

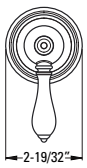

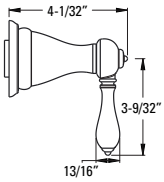

Features:
- SecurePfit™
- Metal Lever Handle and Matching Flange
- Can Be Used with Ø15-2WDX for Cal Green Compliant Applications

Must Order Ø15-4WDX or Ø15-2WDX Rough In Valve Separately. See Valve Section.

18" Towel Bar

Model	Finish	Case Qty	List Price
BTB-MB1C	Polished Chrome	3	$63
BTB-MB1K	Brushed Nickel	3	$74
BTB-MB1D	Polished Nickel	3	$74
BTB-MB1Y	Tuscan Bronze	3	$87

Technical Info

Holes: • 2-Hole

Features:
- Premium Metal Construction
- Standard Mounting Posts
- Concealed Screw Installation
- Mounting Hardware Included

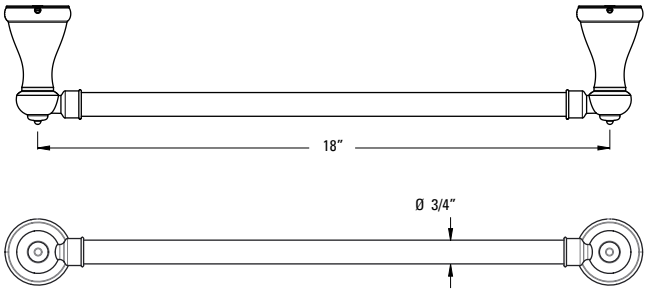

24" Towel Bar

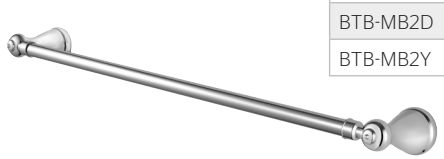

Model	Finish	Case Qty	List Price
BTB-MB2C	Polished Chrome	3	$86
BTB-MB2K	Brushed Nickel	3	$98
BTB-MB2D	Polished Nickel	3	$98
BTB-MB2Y	Tuscan Bronze	3	$111

Holes: • 2-Hole

Features:
- Premium Metal Construction
- Standard Mounting Posts
- Concealed Screw Installation
- Mounting Hardware Included

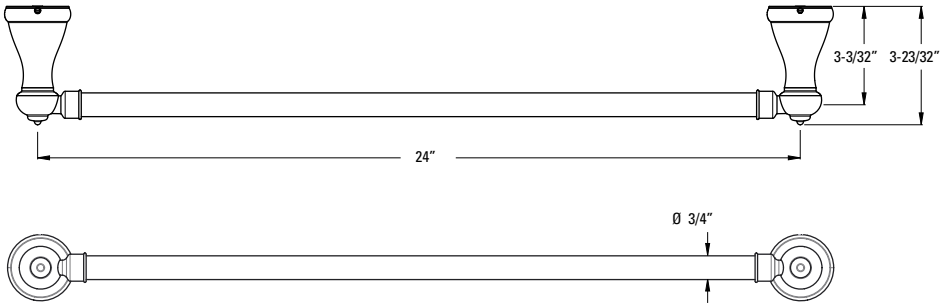

Towel Ring

Model	Finish	Case Qty	List Price
BRB-MB1C	Polished Chrome	3	$45
BRB-MB1K	Brushed Nickel	3	$55
BRB-MB1D	Polished Nickel	3	$55
BRB-MB1Y	Tuscan Bronze	3	$68

Holes: • 1-Hole

Features:
- Premium Metal Construction
- Standard Mounting Posts
- Concealed Screw Installation
- Mounting Hardware Included

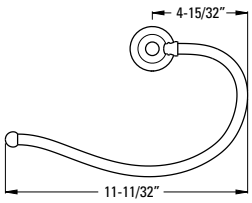

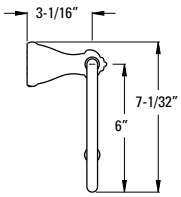

SHOWROOM PREFERRED

Paper Holder

Model	Finish	Case Qty	List Price
BPH-MB1C	Polished Chrome	3	$52
BPH-MB1K	Brushed Nickel	3	$64
BPH-MB1D	Polished Nickel	3	$64
BPH-MB1Y	Tuscan Bronze	3	$70

Technical Info

Holes: • 2-Hole

Features:
- Premium Metal Construction
- Standard Mounting Posts
- Concealed Screw Installation
- Mounting Hardware Included
- Swivel Mount Paper Holder

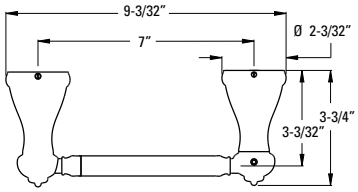

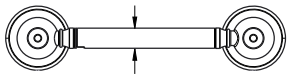

Robe Hook

BRH-MB1C	Polished Chrome	3	$27
BRH-MB1K	Brushed Nickel	3	$39
BRH-MB1D	Polished Nickel	3	$39
BRH-MB1Y	Tuscan Bronze	3	$51

Holes: • 1-Hole

Features:
- Premium Metal Construction
- Standard Mounting Posts
- Concealed Screw Installation
- Mounting Hardware Included

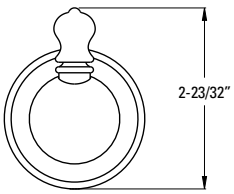

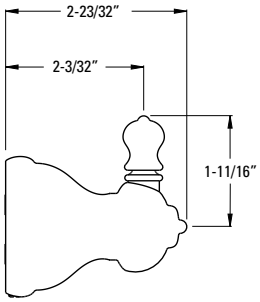

CONTEMPRA

SHOWROOM PREFERRED

Single Control Vessel Lavatory
LG4Ø-NCØØ

Single Control Lavatory
LG42-NCØØ

8" Widespread Lavatory
LG49-NC1C

3-Hole Roman Tub
RT6-5NCC

Tub & Shower
LG89-8NCC

Shower Only
LG89-8NCC

Valve Only
R89-1NCC

Thermostatic Valve Only
R89-2NCC

Diverter Trim
Ø16-NC1C

Accessories

18" & 24" Towel Bar
BTB-NC1C & BTB-NC2C

Towel Ring
BRB-NC1C

Paper Holder
BPH-NC1C

Robe Hook
BRH-NC1C

Single Control Vessel Lavatory

Model	Finish	Case Qty	List Price
LG4Ø-NCØØ	Polished Chrome	3	$335
LG4Ø-NKØØ	Brushed Nickel	3	$446
LG4Ø-NBØØ	Matte Black	3	$502
LG4Ø-NBGØØ	Brushed Gold	3	$608

Matte Black Available Fall 2018

Technical Info

Holes: • 1-Hole installation

Features:
- Ceramic Disc Valve
- Metal Lever Handle
- Single Post Mounting Ring
- Grid Strainer Sold Separately
- Hot/Cold Indicator
- 1.2 gpm @ 60 psi

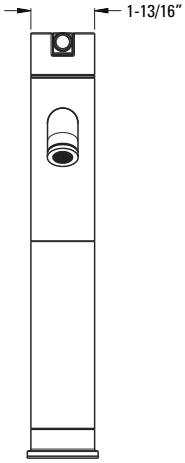

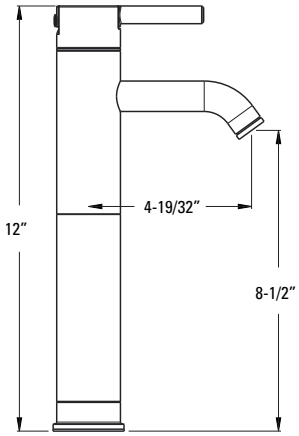

Single Control Lavatory

LG42-NCØØ	Polished Chrome	3	$261
LG42-NKØØ	Brushed Nickel	3	$372
LG42-NBØØ	Matte Black	3	$392
LG42-NBGØØ	Brushed Gold	3	$475

Matte Black Available Fall 2018

Holes: • 1 or 3-Hole 4" Installation

Features:
- Ceramic Disc Valve
- Metal Lever Handle
- Single Post Mounting Ring
- 3-Hole Deckplate Sold Separately 961-Ø95*
- All Metal Pop-Up
- Hot/Cold Indicator
- 1.2 gpm @ 60 psi

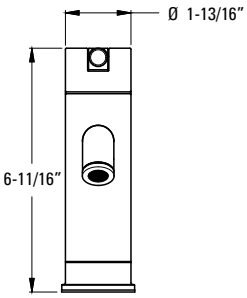

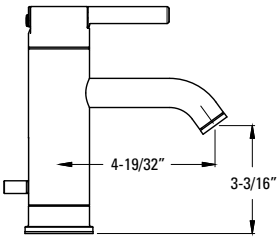

CEC Compliant | Cal Green Compliant | Meets EPA WaterSense℠ Standards | NSF Lead-Free Certified | ADA Compliant | UltraSeal™ | SecurePfit™

8" Widespread Lavatory

Model	Finish	Case Qty	List Price
LG49-NC1C	Polished Chrome	3	$332
LG49-NC1K	Brushed Nickel	3	$386
LG49-NC1B	Matte Black	3	$497
LG49-NC1BG	Brushed Gold	3	$603

Matte Black Available Fall 2018

Technical Info

Holes: • 3-Hole 8-15" Installation

Features:
- Ceramic Disc Valves
- Metal Lever Handles
- High Arc Spout
- Quick Connect Hose Assembly
- All Metal Pop-Up
- Order 971-Ø86Ø to Increase Max. Install Depth to 3"
- 1.2 gpm @ 60 psi

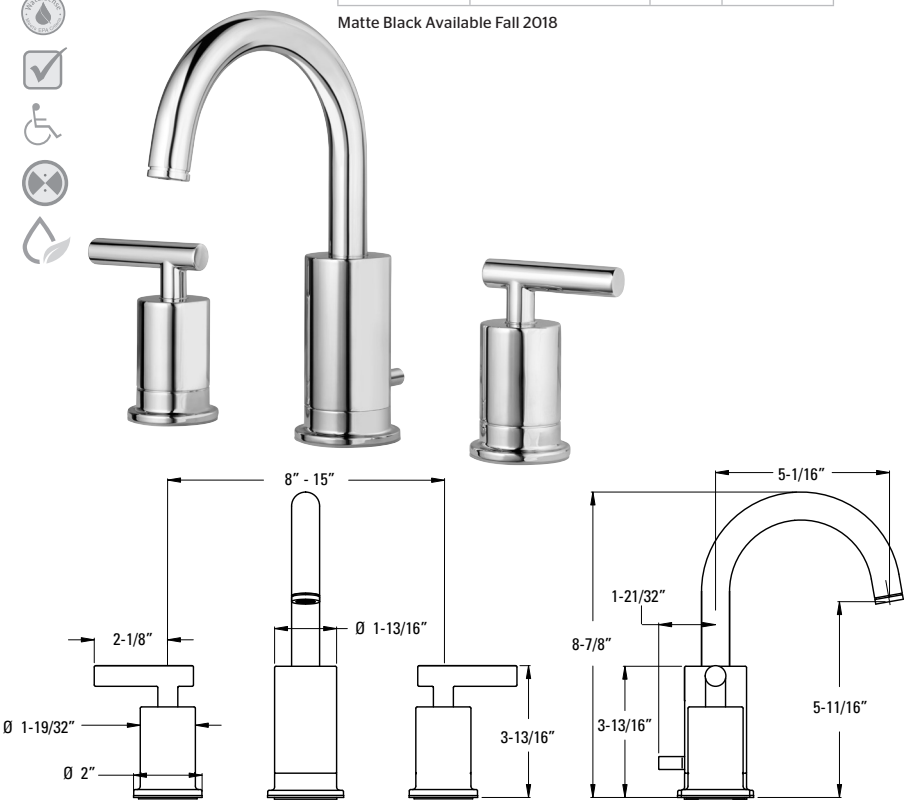

Universal Grid Strainer

T47-9GSC	Polished Chrome	6	$44
T47-9GSK	Brushed Nickel	6	$50
T47-9GSB	Matte Black	6	$57
T47-9GSBG	Brushed Gold	6	$76

Matte Black Available Fall 2018

Features:
- All Metal Grid Strainer
- With Overflow
- 1 1/4" Tailpiece

Universal Grid Strainer

T47-7GLC	Polished Chrome	6	$44
T47-7GLK	Brushed Nickel	6	$50
T47-7GLB	Matte Black	6	$57
T47-7GLBG	Brushed Gold	6	$76

Matte Black Available Fall 2018

Features:
- All Metal Grid Strainer
- No Overflow
- 1 1/4" Tailpiece

CEC Compliant | Cal Green Compliant | Meets EPA WaterSense℠ Standards | NSF Lead-Free Certified | ADA Compliant | UltraSeal™ | SecurePfit™

Roman Tub Trim

Model	Finish	Case Qty	List Price
RT6-5NCC	Polished Chrome	3	$341
RT6-5NCK	Brushed Nickel	3	$489
RT6-5NCB	Matte Black	3	$512
RT6-5NCBG	Brushed Gold	3	$619

Matte Black Available Fall 2018

Technical Info

Holes: • 3-Hole

Features:
- Ceramic Disc Valves
- Fixed Spout
- Handles Included

Must Order ØX6-Ø5ØR or ØX6-15ØR Rough In Valve Separately. See Valve Section.

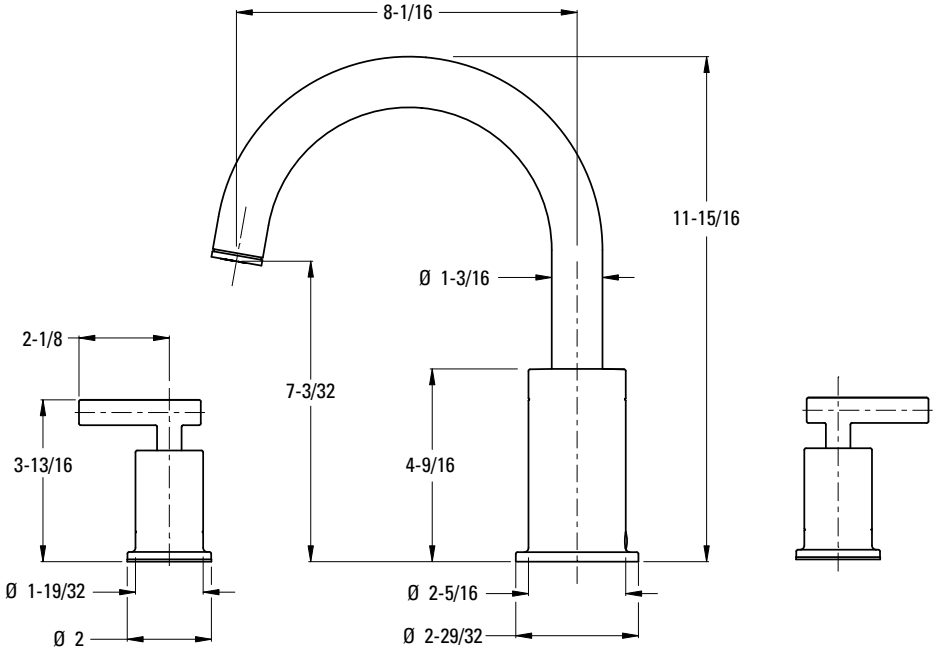

CEC Compliant | Cal Green Compliant | Meets EPA WaterSense℠ Standards | NSF Lead-Free Certified | ADA Compliant | UltraSeal™ | SecurePfit™

Pressure Balance Tub & Shower Trim

Model	Finish	Case Qty	List Price
LG89-8NCC	Polished Chrome	3	$254
LG89-8NCK	Brushed Nickel	3	$373
LG89-8NCB	Matte Black	3	$381
LG89-8NCBG	Brushed Gold	3	$461

Matte Black Available Fall 2018

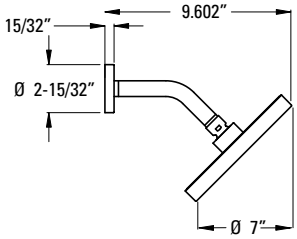

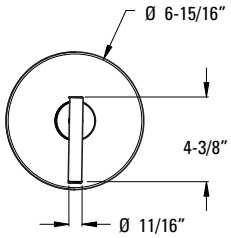

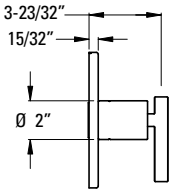

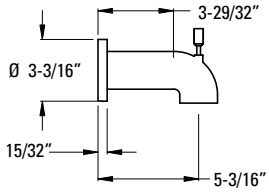

Features:
- SecurePfit™
- Metal Lever Handle
- Hot/Cold Indicator
- Decorative Raincan Showerhead
- Easy To Clean Spray Nozzles
- IP Threaded Metal Diverter Tub Spout
- Order 941-Ø55Ø for 1.5 gpm Showerhead Insert
- Showerhead 1.8 gpm @ 80 psi

Must Order Pressure Balance Rough in Valve Separately. See Valve Section.

Pressure Balance Shower Trim

LG89-7NCC	Polished Chrome	3	$182
LG89-7NCK	Brushed Nickel	3	$270
LG89-7NCB	Matte Black	3	$273
LG89-7NCBG	Brushed Gold	3	$330

Matte Black Available Fall 2018

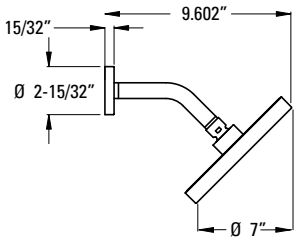

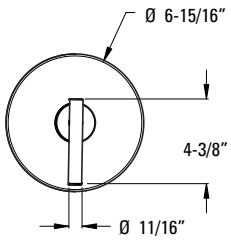

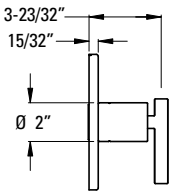

Features:
- SecurePfit™
- Metal Lever Handle
- Hot/Cold Indicator
- Decorative Raincan Showerhead
- Easy To Clean Spray Nozzles
- Order 941-Ø55Ø for 1.5 gpm Showerhead Insert
- Showerhead 1.8 gpm @ 80 psi

Must Order Pressure Balance Rough in Valve Separately. See Valve Section.

CEC Compliant | Cal Green Compliant | Meets EPA WaterSense℠ Standards | NSF Lead-Free Certified | ADA Compliant | UltraSeal™ | SecurePfit™

Pressure Balance Valve Only Trim

Model	Finish	Case Qty	List Price
R89-1NCC	Polished Chrome	3	$94
R89-1NCK	Brushed Nickel	3	$145
R89-1NCB	Matte Black	3	$151
R89-1NCBG	Brushed Gold	3	$170

Matte Black Available Fall 2018

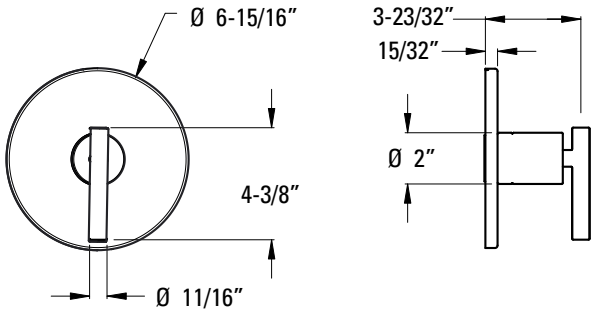

Technical Info

Features:
- SecurePfit™
- Metal Lever Handle
- Hot/Cold Indicator

Must Order Pressure Balance Rough in Valve Separately. See Valve Section.

1/2" Thermostatic Valve Only Trim

R89-2NCC	Polished Chrome	3	$218
R89-2NCK	Brushed Nickel	3	$270
R89-2NCB	Matte Black	3	$281
R89-2NCBG	Brushed Gold	3	$301

Available Spring 2018
Matte Black Available Fall 2018

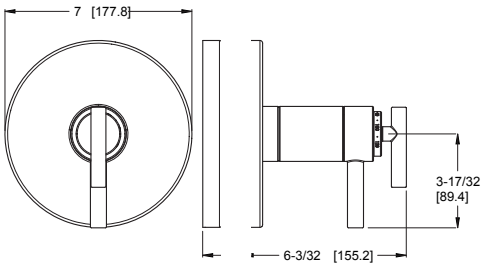

Features:
- SecurePfit™
- Metal Lever Handle
- Front Handle Controls Temperature
- Back Handle Controls Volume

Must Order 1/2" Thermostatic Rough In Valve Separately. See Valve Section.

Diverter Trim Only

Ø16-NC1C	Polished Chrome	3	$81
Ø16-NC1K	Brushed Nickel	3	$106
Ø16-NC1B	Matte Black	3	$122
Ø16-NC1BG	Brushed Gold	3	$147

Matte Black Available Fall 2018

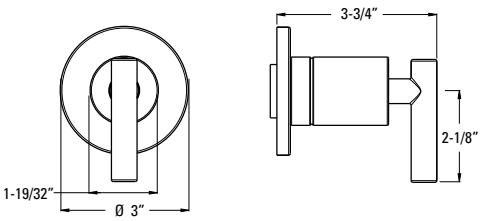

Features:
- SecurePfit™
- Metal Lever Handle and Matching Flange
- Can Be Used with Ø15-2WDX for Cal Green Compliant Applications

Must Order Ø15-4WDX or Ø15-2WDX Rough In Valve Separately. See Valve Section.

CEC Compliant | Cal Green Compliant | Meets EPA WaterSense℠ Standards | NSF Lead-Free Certified | ADA Compliant | UltraSeal™ | SecurePfit™

Raincan Showerhead

Model	Finish	Case Qty	List Price
973-241A	Polished Chrome	1	$91
973-241J	Brushed Nickel	1	$102
973-241B	Matte Black	1	$136
973-241BG	Brushed Gold	1	$164

Matte Black Available Fall 2018

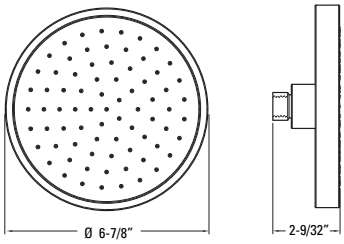

Technical Info

Features:
- Raincan Showerhead
- Easy To Clean Spray Nozzles
- Brass Ball Joint
- Shower Arm and Flange Sold Separately
- Order 941-Ø55Ø for 1.5 gpm Showerhead Insert

Shower Arm Flange

96Ø-258A	Polished Chrome	1	$8
96Ø-258J	Brushed Nickel	1	$12
96Ø-258B	Matte Black	1	$15
96Ø-258BG	Brushed Gold	1	$16

Matte Black Available Fall 2018

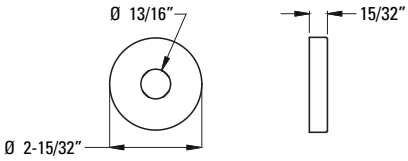

Features:
- All Metal
- Matches Contempra Style & Finishes

Curved Shower Arm

973-Ø3ØA	Polished Chrome	1	$14
973-Ø3ØJ	Brushed Nickel	1	$15
973-Ø3ØB	Matte Black	1	$15
973-Ø3ØBG	Brushed Gold	1	$24

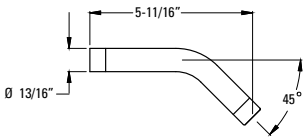

Features:
- Brass Shower Arm
- 1/2" NPT Male Connections

Contempra® Tub Spout

92Ø-136A	Polished Chrome	1	$69
92Ø-136J	Brushed Nickel	1	$86
92Ø-136B	Matte Black	1	$75
92Ø-136BG	Brushed Gold	1	$81

Matte Black Available Fall 2018

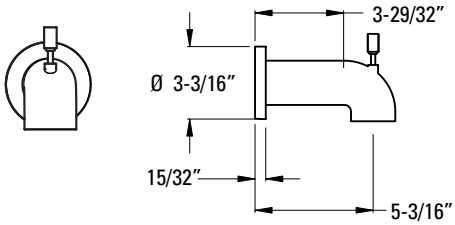

Features:
- All Metal
- IP Threaded Diverted Spout

CEC Compliant | Cal Green Compliant | Meets EPA WaterSense℠ Standards | NSF Lead-Free Certified | ADA Compliant | UltraSeal™ | SecurePfit™

18" Towel Bar

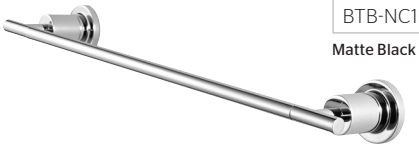

Model	Finish	Case Qty	List Price
BTB-NC1C	Polished Chrome	3	$54
BTB-NC1K	Brushed Nickel	3	$76
BTB-NC1B	Matte Black	3	$81
BTB-NC1BG	Brushed Gold	3	$99

Matte Black Available Fall 2018

Technical Info

Holes: • 2-Hole

Features:
- Premium Metal Construction
- Standard Mounting Bracket
- Concealed Screw Installation
- Mounting Hardware Included

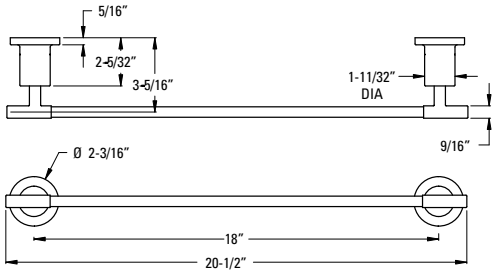

24" Towel Bar

Model	Finish	Case Qty	List Price
BTB-NC2C	Polished Chrome	3	$59
BTB-NC2K	Brushed Nickel	3	$81
BTB-NC2B	Matte Black	3	$90
BTB-NC2BG	Brushed Gold	3	$108

Matte Black Available Fall 2018

Holes: • 2-Hole

Features:
- Premium Metal Construction
- Standard Mounting Bracket
- Concealed Screw Installation
- Mounting Hardware Included

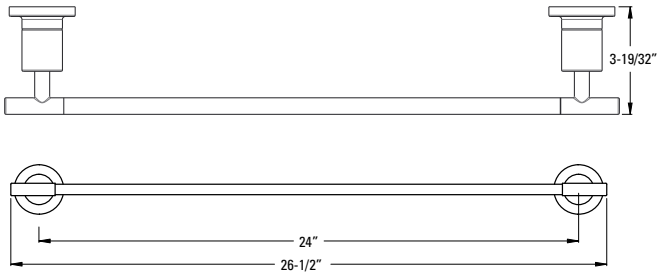

Towel Ring

Model	Finish	Case Qty	List Price
BRB-NC1C	Polished Chrome	3	$44
BRB-NC1K	Brushed Nickel	3	$54
BRB-NC1B	Matte Black	3	$66
BRB-NC1BG	Brushed Gold	3	$79

Matte Black Available Fall 2018

Holes: • 1-Hole

Features:
- Premium Metal Construction
- Standard Mounting Bracket
- Concealed Screw Installation
- Mounting Hardware Included

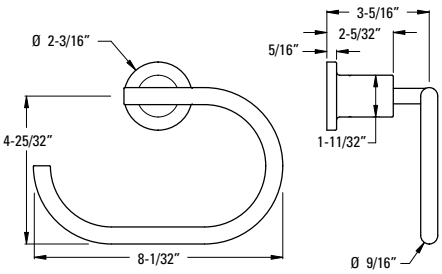

SHOWROOM PREFERRED

Paper Holder

Model	Finish	Case Qty	List Price
BPH-NC1C	Polished Chrome	3	$44
BPH-NC1K	Brushed Nickel	3	$59
BPH-NC1B	Matte Black	3	$66
BPH-NC1BG	Brushed Gold	3	$79

Matte Black Available Fall 2018

Technical Info

Holes: • 2-Hole

Features:
- Premium Metal Construction
- Standard Mounting Bracket
- Concealed Screw Installation
- Mounting Hardware Included
- Swivel Mount Paper Holder

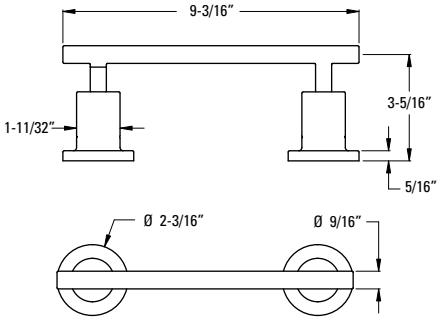

Robe Hook

BRH-NC1C	Polished Chrome	3	$33
BRH-NC1K	Brushed Nickel	3	$44
BRH-NC1B	Matte Black	3	$49
BRH-NC1BG	Brushed Gold	3	$58

Matte Black Available Fall 2018

Holes: • 1-Hole

Features:
- Premium Metal Construction
- Standard Mounting Bracket
- Concealed Screw Installation
- Mounting Hardware Included

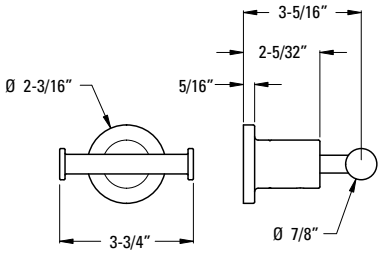

DECKARD

Single Control Lavatory
LG42-DAØC

8" Widespread Lavatory
LG49-DAØC

3-Hole Roman Tub
RT6-5DAC

Diverter Trim
Ø16-DAØC

Tub & Shower
LG89-8DAC

Shower Only
LG89-7DAC

Valve Only
R89-1DAC

1-Hole Roman Tub
RT6-1DAC

2-Hole Roman Tub
RT6-2DAC

Accessories

18" & 24" Towel Bar
BTB-DA1C & BTB-DA2C

Towel Ring
BRB-DA1C

Paper Holder
BPH-DA1C

Robe Hook
BRH-DA1C

Single Control Lavatory

Model	Finish	Case Qty	List Price
LG42-DAØC	Polished Chrome	3	$207
LG42-DAØK	Brushed Nickel	3	$275
LG42-DAØB	Matte Black	3	$321

Technical Info

Holes: • 1 or 3-Hole 4" Installation

Features:
- Ceramic Disc Valve
- Metal Lever Handle
- High Temp Limit Stop
- Single Post Mounting Ring
- 3-Hole Deckplate Sold Separately 961-23Ø*
- All Metal Pop-Up
- 1.2 gpm @ 60 psi

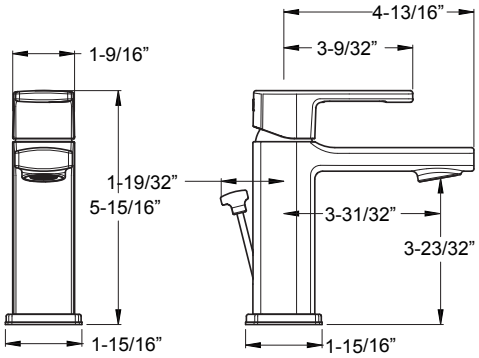

8" Widespread Lavatory

LG49-DAØC	Polished Chrome	3	$290
LG49-DAØK	Brushed Nickel	3	$342
LG49-DAØB	Matte Black	3	$383

Holes: • 3-Hole 8" Installation

Features:
- Ceramic Disc Valves
- Metal Lever Handles
- Fixed Spout
- All Metal Pop-Up
- Order 971-Ø86Ø to Increase Max. Install Depth to 3"
- 1.2 gpm @ 60 psi

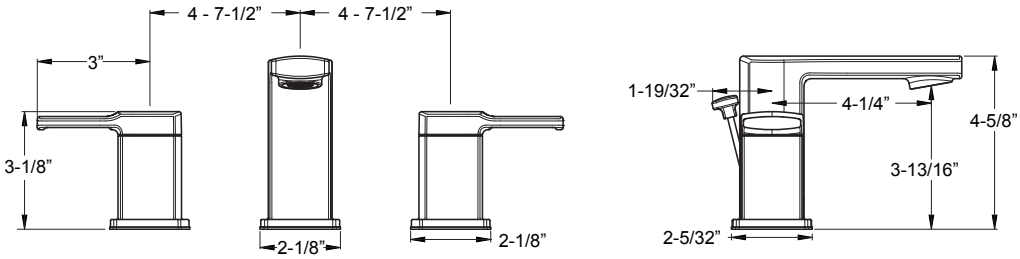

CEC Compliant | Cal Green Compliant | Meets EPA WaterSense℠ Standards | NSF Lead-Free Certified | ADA Compliant | UltraSeal™ | SecurePfit™

1-Hole Roman Tub

Model	Finish	Case Qty	List Price
RT6-1DAC	Polished Chrome	3	$466
RT6-1DAK	Brushed Nickel	3	$570
RT6-1DAB	Matte Black	3	$673

Technical Info

Holes: • 1-Hole

Features:
- Ceramic Disc Valve
- Metal Lever Handle
- Fixed Spout
- 1/2" NPSM Inlet Lines

Valve Included. No Additional Valving Needed.

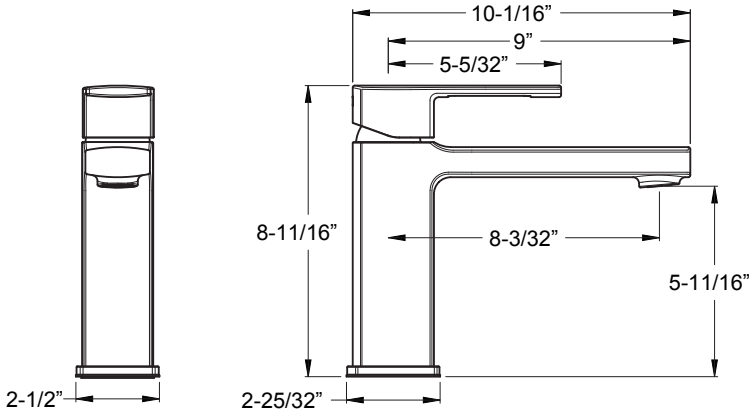

2-Hole Roman Tub

RT6-2DAC	Polished Chrome	3	$570
RT6-2DAK	Brushed Nickel	3	$673
RT6-2DAB	Matte Black	3	$725

Holes: • 2-Hole

Features:
- Ceramic Disc Valve
- Metal Lever Handle
- Fixed Spout
- Handheld Shower
- 1/2" NPSM Inlet Lines
- Hand Shower 1.8 gpm @ 60 psi

Valve Included. No Additional Valving Needed.

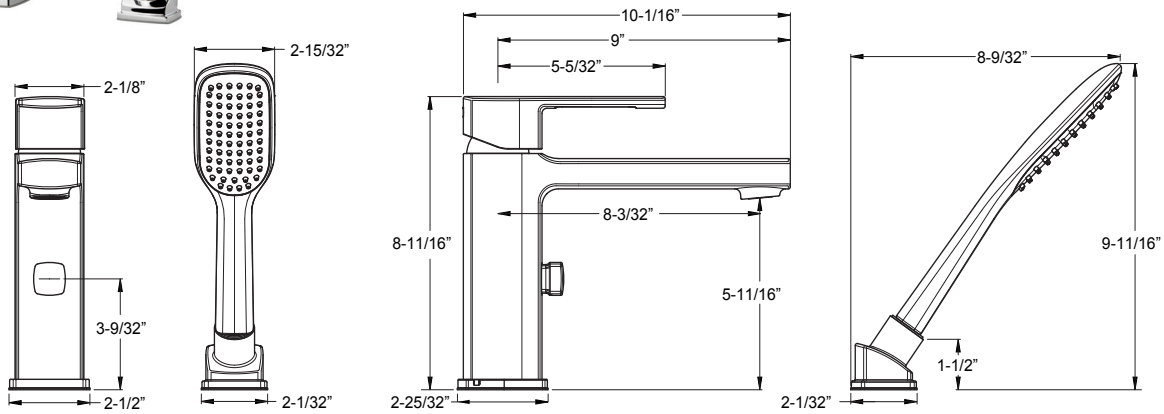

CEC Compliant | Cal Green Compliant | Meets EPA WaterSense℠ Standards | NSF Lead-Free Certified | ADA Compliant | UltraSeal™ | SecurePfit™

3-Hole Roman Tub Trim

Model	Finish	Case Qty	List Price
RT6-5DAC	Polished Chrome	3	$306
RT6-5DAK	Brushed Nickel	3	$404
RT6-5DAB	Matte Black	3	$435

Technical Info

Holes: • 3-Hole

Features:
- Ceramic Disc Valves
- Metal Lever Handles
- Fixed Spout

Must Order ØX6-Ø5ØR or ØX6-15ØR Rough In Valve Separately. See Valve Section.

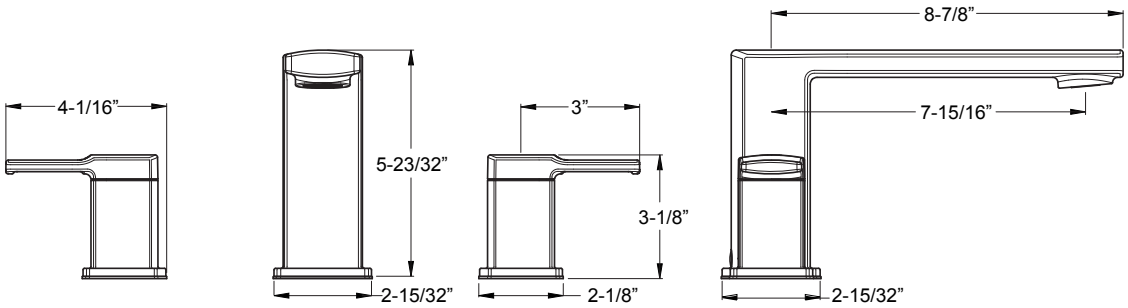

Pressure Balance Tub & Shower Trim

LG89-8DAC	Polished Chrome	3	$176
LG89-8DAK	Brushed Nickel	3	$249
LG89-8DAB	Matte Black	3	$285

Features:
- SecurePfit™
- Metal Lever Handle
- Hot/Cold Indicator
- Multi-Function Showerhead (3 Functions: Penetrating Massage, Rain Spray, and Invigorating Spray)
- Easy To Clean Spray Nozzles
- IP and Removable Quick Connect Metal Diverter Tub Spout
- Order 941-Ø55 for 1.5 gpm Showerhead Insert
- Showerhead 1.8 gpm @ 80 psi

Must Order Pressure Balance Rough in Valve Separately. See Valve Section.

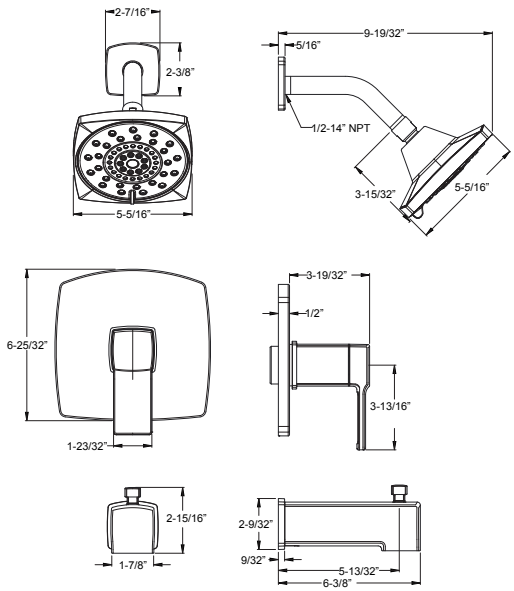

CEC Compliant | Cal Green Compliant | Meets EPA WaterSense℠ Standards | NSF Lead-Free Certified | ADA Compliant | UltraSeal™ | SecurePfit™

Pressure Balance Shower Trim

Model	Finish	Case Qty	List Price
LG89-7DAC	Polished Chrome	3	$145
LG89-7DAK	Brushed Nickel	3	$218
LG89-7DAB	Matte Black	3	$254

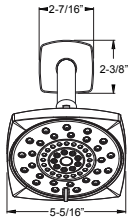

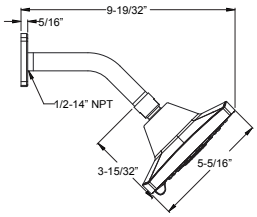

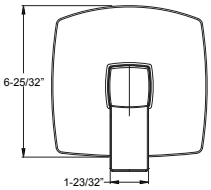

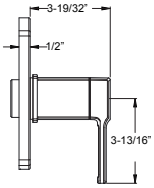

Technical Info

Features:
- SecurePfit™
- Metal Lever Handle
- Hot/Cold Indicator
- Multi-Function Showerhead (3 Functions: Penetrating Massage, Rain Spray, and Invigorating Spray)
- Easy To Clean Spray Nozzles
- Order 941-Ø55 for 1.5 gpm Showerhead Insert
- Showerhead 1.8 gpm @ 80 psi

Must Order Pressure Balance Rough in Valve Separately. See Valve Section.

Pressure Balance Valve Only Trim

R89-1DAC	Polished Chrome	6	$78
R89-1DAK	Brushed Nickel	6	$104
R89-1DAB	Matte Black	6	$140

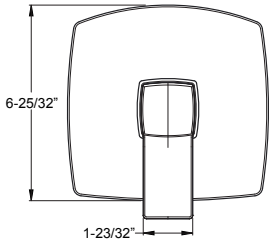

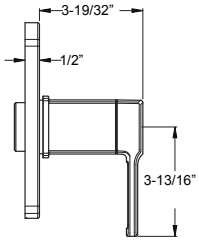

Features:
- SecurePfit™
- Metal Lever Handle
- Hot/Cold Indicator

Must Order Pressure Balance Rough in Valve Separately. See Valve Section.

Diverter Trim Only

Ø16-DAØC	Polished Chrome	3	$73
Ø16-DAØK	Brushed Nickel	3	$88
Ø16-DAØB	Matte Black	3	$125

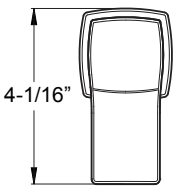

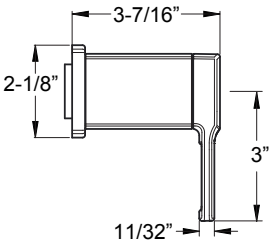

Features:
- SecurePfit™
- Metal Lever Handle and Matching Flange
- Can Be Used With Ø15-2WDX for Cal Green Compliant Applications

Must Order Ø15-4WDX or Ø15-2WDX Rough In Valve Separately. See Valve Section.

CEC Compliant | Cal Green Compliant | Meets EPA WaterSense℠ Standards | NSF Lead-Free Certified | ADA Compliant | UltraSeal™ | SecurePfit™

18" Towel Bar

Model	Finish	Case Qty	List Price
BTB-DA1C	Polished Chrome	3	$52
BTB-DA1K	Brushed Nickel	3	$57
BTB-DA1B	Matte Black	3	$63

Technical Info

Holes: • 2-Hole

Features:
- All Metal Construction
- Standard Mounting Brackets
- Concealed Screw Installation
- Mounting Hardware Included

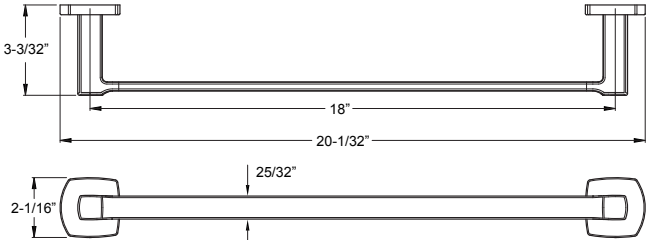

24" Towel Bar

BTB-DA2C	Polished Chrome	3	$54
BTB-DA2K	Brushed Nickel	3	$59
BTB-DA2B	Tuscan Bronze	3	$66

Holes: • 2-Hole

Features:
- All Metal Construction
- Standard Mounting Brackets
- Concealed Screw Installation
- Mounting Hardware Included

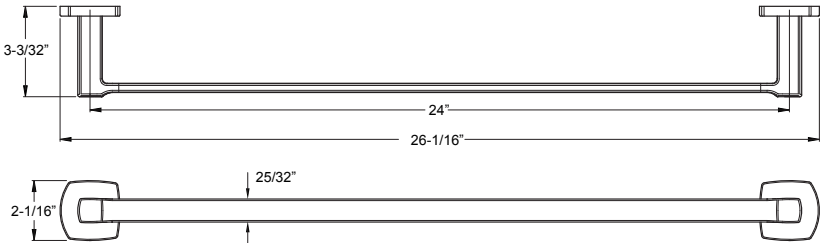

Towel Ring

BRB-DA1C	Polished Chrome	8	$37
BRB-DA1K	Brushed Nickel	8	$40
BRB-DA1B	Tuscan Bronze	8	$44

Holes: • 1-Hole

Features:
- All Metal Construction
- Standard Mounting Brackets
- Concealed Screw Installation
- Mounting Hardware Included

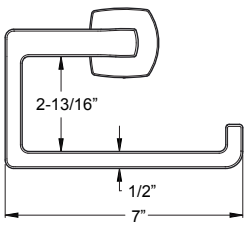

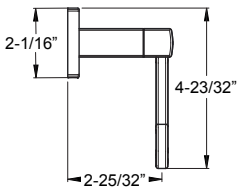

Paper Holder

Model	Finish	Case Qty	List Price
BPH-DA1C	Polished Chrome	3	$45
BPH-DA1K	Brushed Nickel	3	$50
BPH-DA1B	Tuscan Bronze	3	$54

Technical Info

Holes: • 2-Hole

Features:
- Swival Mount Paper Holder
- All Metal Construction
- Standard Mounting Brackets
- Concealed Screw Installation
- Mounting Hardware Included

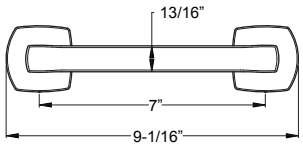

Robe Hook

BRH-DA1C	Polished Chrome	12	$28
BRH-DA1K	Brushed Nickel	12	$32
BRH-DA1B	Tuscan Bronze	12	$35

Holes: • 1-Hole

Features:
- All Metal Construction
- Standard Mounting Brackets
- Concealed Screw Installation
- Mounting Hardware Included

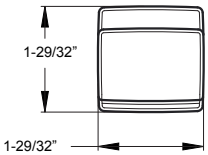

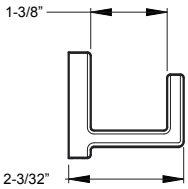

NORTHCOTT

Single Control Lavatory
LG42-MGØC

4" Centerset Lavatory
LG48-MGØC

8" Widespread Lavatory
LG49-MGØC

Diverter Trim
Ø16-MGØC

3-Hole Roman Tub
RT6-5MGC

Tub & Shower
LG89-8MGC

Shower Only
LG89-7MGC

Valve Only
R89-1MGC

Accessories

18" & 24" Towel Bar
BTB-MG1C & BTB-MG2C

Towel Ring
BRB-MG1C

Paper Holder
BPH-MG1C

Robe Hook
BRH-MG1C

Single Control Lavatory

Model	Finish	Case Qty	List Price
LG42-MGØC	Polished Chrome	3	$207
LG42-MGØK	Brushed Nickel	3	$275
LG42-MGØY	Tuscan Bronze	3	$321

Technical Info

Holes: • 1 or 3-Hole 4" Installation

Features:
- Ceramic Disc Valve
- Metal Lever Handle
- High Arc Fixed Spout
- High Temp Limit Stop
- 3-Hole Deckplate Sold Separately 961-2Ø9*
- All Metal Pop-Up
- 1.2 gpm @ 60 psi

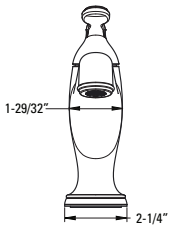

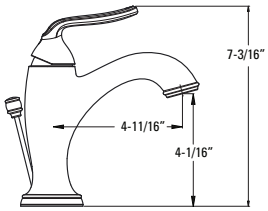

4" Centerset Lavatory

LG48-MGØC	Polished Chrome	3	$202
LG48-MGØK	Brushed Nickel	3	$270
LG48-MGØY	Tuscan Bronze	3	$311

Holes: • 3-Hole 4" Installation

Features:
- Ceramic Disc Valves
- Metal Lever Handles
- High Arc Fixed Spout
- All Metal Pop-Up
- 1.2 gpm @ 60 psi

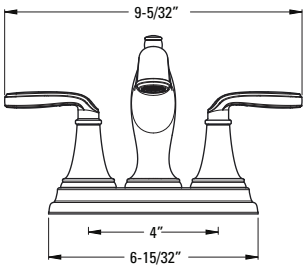

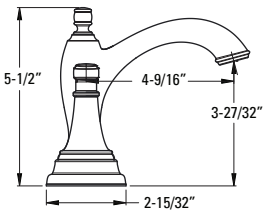

8" Widespread Lavatory

LG49-MGØC	Polished Chrome	3	$290
LG49-MGØK	Brushed Nickel	3	$342
LG49-MGØY	Tuscan Bronze	3	$383

Holes: • 3-Hole 8-15" Installation

Features:
- Ceramic Disc Valves
- Metal Lever Handles
- High Arc Fixed Spout
- All Metal Pop-Up
- Order 971-Ø86Ø to Increase Max. Install Depth to 3"
- 1.2 gpm @ 60 psi

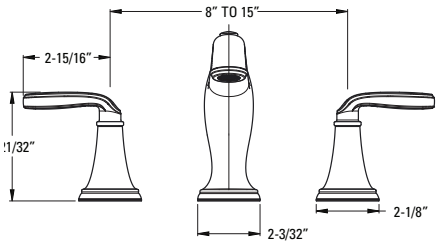

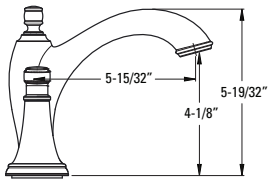

CEC Compliant | Cal Green Compliant | Meets EPA WaterSense℠ Standards | NSF Lead-Free Certified | ADA Compliant | UltraSeal™ | SecurePfit™

Roman Tub Trim

Model	Finish	Case Qty	List Price
RT6-5MGC	Polished Chrome	3	$306
RT6-5MGK	Brushed Nickel	3	$404
RT6-5MGY	Tuscan Bronze	3	$435

Technical Info

Holes: • 3-Hole

Features:
- Ceramic Disc Valves
- Metal Lever Handles
- High Arc Fixed Spout

Must Order ØX6-Ø5ØR or ØX6-15ØR Rough In Valve Separately. See Valve Section.

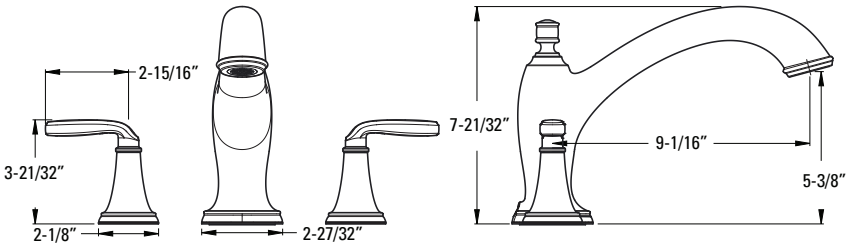

CEC Compliant | Cal Green Compliant | Meets EPA WaterSense℠ Standards | NSF Lead-Free Certified | ADA Compliant | UltraSeal™ | SecurePfit™

Pressure Balance Tub & Shower Trim

Model	Finish	Case Qty	List Price
LG89-8MGC	Polished Chrome	3	$176
LG89-8MGK	Brushed Nickel	3	$249
LG89-8MGY	Tuscan Bronze	3	$285

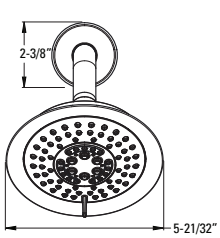

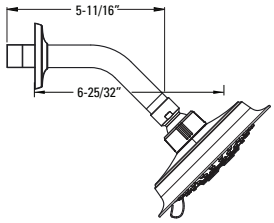

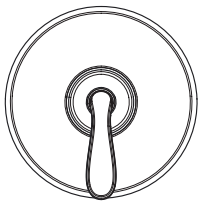

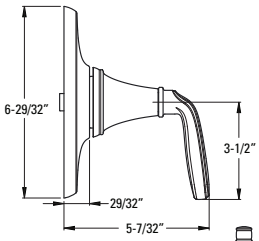

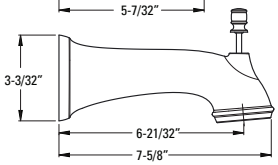

Features:
- SecurePfit™
- Metal Lever Handle
- Hot/Cold Indicator
- 5 Functions:
  - Penetrating Massage
  - Rain Spray
  - Invigorating Spray
  - Champagne/Raincan Combo
  - Campange Spray
- Easy To Clean Spray Nozzles
- IP And Quick Connect Diverted Tub Spout
- Order 941-Ø55Ø for 1.5 gpm Showerhead Insert
- Showerhead 1.8 gpm @ 80 psi

Must Order Pressure Balance Rough in Valve Separately. See Valve Section.

Pressure Balance Shower Trim

LG89-7MGC	Polished Chrome	3	$145
LG89-7MGK	Brushed Nickel	3	$218
LG89-7MGY	Tuscan Bronze	3	$254

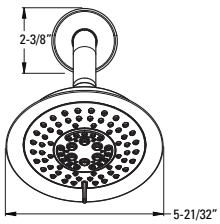

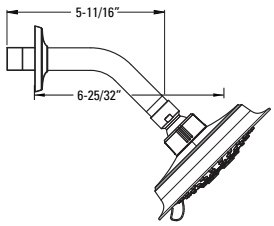

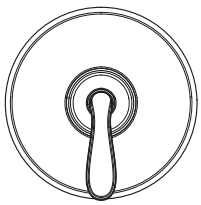

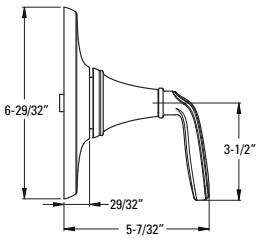

Features:
- SecurePfit™
- Metal Lever Handle
- Hot/Cold Indicator
- 5 Functions:
  - Penetrating Massage
  - Rain Spray
  - Invigorating Spray
  - Champagne/Raincan Combo
  - Campange Spray
- Easy To Clean Spray Nozzles
- IP And Quick Connect Diverted Tub Spout
- Order 941-Ø55Ø for 1.5 gpm Showerhead Insert
- Showerhead 1.8 gpm @ 80 psi

Must Order Pressure Balance Rough in Valve Separately. See Valve Section.

CEC Compliant | Cal Green Compliant | Meets EPA WaterSense℠ Standards | NSF Lead-Free Certified | ADA Compliant | UltraSeal™ | SecurePfit™

Pressure Balance Valve Only Trim

Model	Finish	Case Qty	List Price
R89-1MGC	Polished Chrome	3	$78
R89-1MGK	Brushed Nickel	3	$104
R89-1MGY	Tuscan Bronze	3	$140

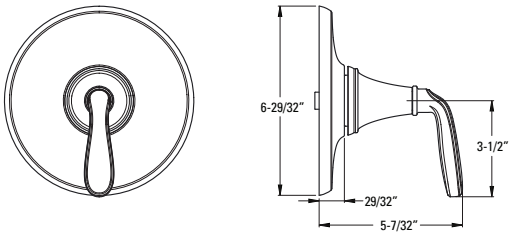

Technical Info

Features:
- SecurePfit™
- Metal Lever Handle
- Hot/Cold Indicator

Must Order Pressure Balance Rough in Valve Separately. See Valve Section.

Diverter Trim Only

Ø16-MGØC	Polished Chrome	3	$73
Ø16-MGØK	Brushed Nickel	3	$88
Ø16-MGØY	Tuscan Bronze	3	$125

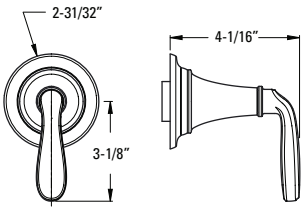

Features:
- SecurePfit™
- Metal Lever Handle and Matching Flange
- Can be Used With Ø15-2WDX for Cal Green Compliant Applications

Must Order Ø15-4WDX or Ø15-2WDX Rough In Valve Separately. See Valve Section.

CEC Compliant | Cal Green Compliant | Meets EPA WaterSense℠ Standards | NSF Lead-Free Certified | ADA Compliant | UltraSeal™ | SecurePfit™

18" Towel Bar

Model	Finish	Case Qty	List Price
BTB-MG1C	Polished Chrome	3	$50
BTB-MG1K	Brushed Nickel	3	$55
BTB-MG1Y	Tuscan Bronze	3	$61

Technical Info

Holes: • 2-Hole

Features:
- All Metal Construction
- Standard Mounting Bracket
- Concealed Screw Installation
- Mounting Hardware Included

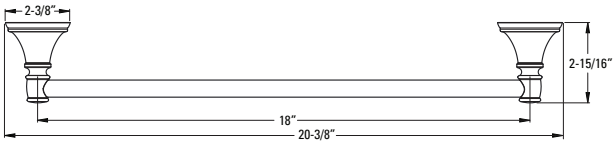

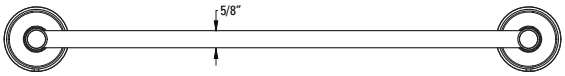

24" Towel Bar

BTB-MG2C	Polished Chrome	3	$52
BTB-MG2K	Brushed Nickel	3	$57
BTB-MG2Y	Tuscan Bronze	3	$63

Holes: • 2-Hole

Features:
- All Metal Construction
- Standard Mounting Bracket
- Concealed Screw Installation
- Mounting Hardware Included

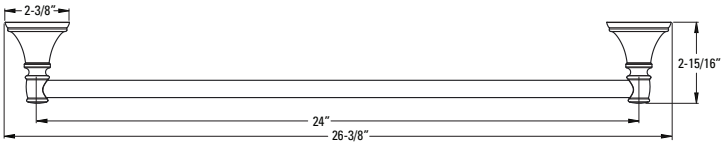

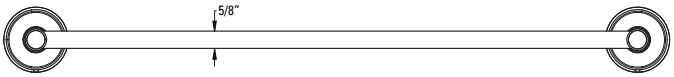

Towel Ring

BRB-MG1C	Polished Chrome	3	$36
BRB-MG1K	Brushed Nickel	3	$39
BRB-MG1Y	Tuscan Bronze	3	$43

Holes: • 1-Hole

Features:
- All Metal Construction
- Standard Mounting Bracket
- Concealed Screw Installation
- Mounting Hardware Included

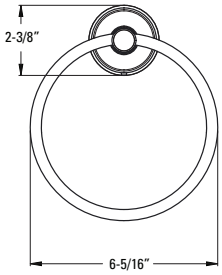

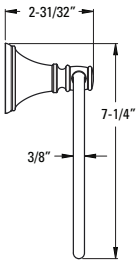

Paper Holder

Model	Finish	Case Qty	List Price
BPH-MG1C	Polished Chrome	3	$43
BPH-MG1K	Brushed Nickel	3	$48
BPH-MG1Y	Tuscan Bronze	3	$52

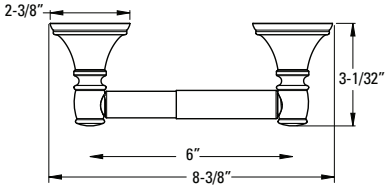

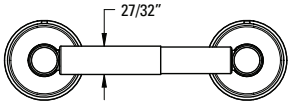

Technical Info

Holes: • 2-Hole

Features:
- All Metal Construction
- Standard Mounting Bracket
- Concealed Screw Installation
- Mounting Hardware Included

Robe Hook

Model	Finish	Case Qty	List Price
BRH-MG1C	Polished Chrome	3	$28
BRH-MG1K	Brushed Nickel	3	$32
BRH-MG1Y	Tuscan Bronze	3	$37

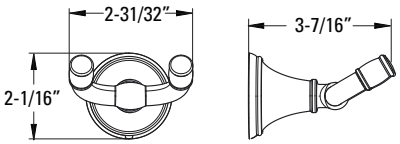

Holes: • 1-Hole

Features:
- All Metal Construction
- Standard Mounting Bracket
- Concealed Screw Installation
- Mounting Hardware Included

BRONSON

4" Centerset Lavatory
LG48-BSØC

8" Widespread Lavatory
LG49-BSØC

3-Hole Roman Tub
RT6-5BSC

Diverter Trim
Ø16-BSØC

Tub & Shower
LG89-8BSC

Shower Only
LG89-7BSC

Valve Only
R89-1BSC

Accessories

18" & 24" Towel Bar
BTB-GL1C & BTB-GL2C

Towel Ring
BRB-GL1C

Paper Holder
BPH-GL1C

Robe Hook
BRH-GL1C

Bronson™ - Lavatory Faucets

4" Centerset Lavatory

Model	Finish	Case Qty	List Price
LG48-BSØC	Polished Chrome	3	$202
LG48-BSØK	Brushed Nickel	3	$270
LG48-BSØY	Tuscan Bronze	3	$311

Technical Info

Holes: • 3-Hole 4" Installation

Features:
- Ceramic Disc Valves
- Metal Lever Handles
- High Arc Fixed Spout
- All Metal Pop-Up
- 1.2 gpm @ 60 psi

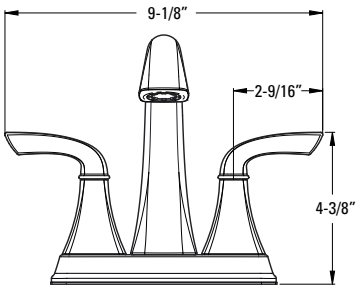

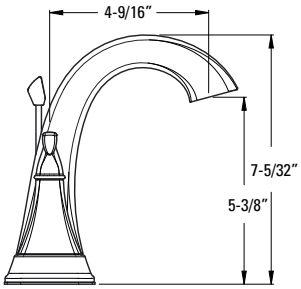

8" Widespread Lavatory

LG49-BSØC	Polished Chrome	3	$290
LG49-BSØK	Brushed Nickel	3	$342
LG49-BSØY	Tuscan Bronze	3	$383

Holes: • 3-Hole 8-15" Installation

Features:
- Ceramic Disc Valves
- Metal Lever Handles
- High Arc Fixed Spout
- Quick Connect Hose Assembly
- All Metal Pop-Up
- Order 971-Ø86Ø to Increase Max Install Depth to 3"
- 1.2 gpm @ 60 psi

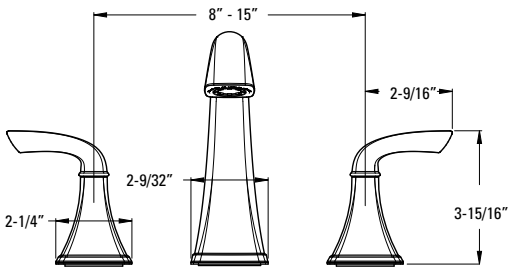

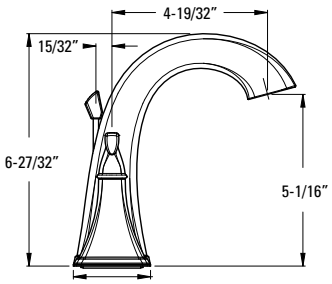

CEC Compliant | Cal Green Compliant | Meets EPA WaterSense℠ Standards | NSF Lead-Free Certified | ADA Compliant | UltraSeal™ | SecurePfit™

Roman Tub Trim

Model	Finish	Case Qty	List Price
RT6-5BSC	Polished Chrome	3	$306
RT6-5BSK	Brushed Nickel	3	$404
RT6-5BSY	Tuscan Bronze	3	$435

Technical Info

Holes: • 3-Hole

Features:
- Ceramic Disc Valves
- Metal Lever Handles
- High Arc Fixed Spout

Must Order ØX6-Ø5ØR or ØX6-15ØR Rough In Valve Separately. See Valve Section.

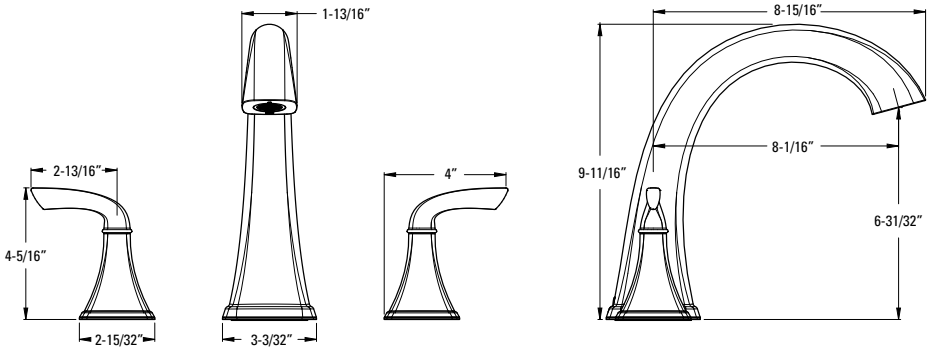

CEC Compliant | Cal Green Compliant | Meets EPA WaterSense℠ Standards | NSF Lead-Free Certified | ADA Compliant | UltraSeal™ | SecurePfit™

Bronson™ - Tub & Shower

Pressure Balance Tub & Shower Trim

Model	Finish	Case Qty	List Price
LG89-8BSC	Polished Chrome	3	$176
LG89-8BSK	Brushed Nickel	3	$249
LG89-8BSY	Tuscan Bronze	3	$285

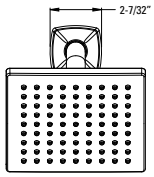

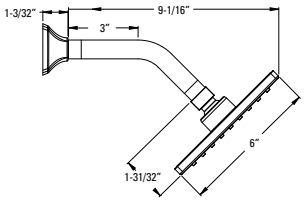

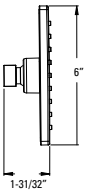

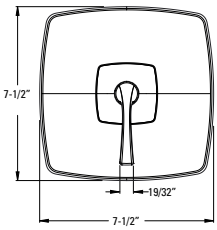

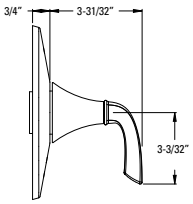

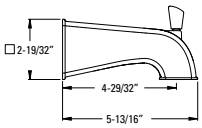

Technical Info

Features:
- SecurePfit™
- Metal Lever Handle
- Hot/Cold Indicator
- Decorative Raincan Showerhead
- Easy To Clean Spray Nozzles
- IP and Quick Connect Diverted Tub Spout
- Order 941-Ø55 for 1.5 gpm Showerhead Insert
- Showerhead 1.8 gpm @ 80 psi

Must Order Pressure Balance Rough in Valve Separately. See Valve Section.

Pressure Balance Shower Trim

LG89-7BSC	Polished Chrome	3	$145
LG89-7BSK	Brushed Nickel	3	$218
LG89-7BSY	Tuscan Bronze	3	$254

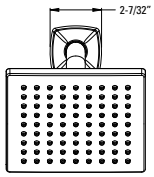

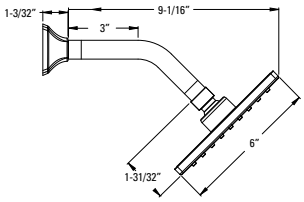

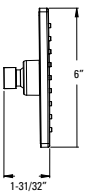

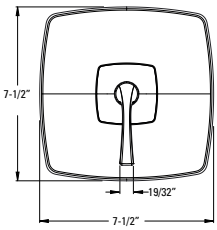

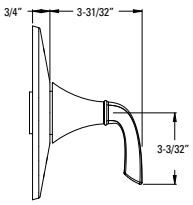

Features:
- SecurePfit™
- Metal Lever Handle
- Hot/Cold Indicator
- Decorative Raincan Showerhead
- Easy To Clean Spray Nozzles
- Order 941-Ø55 for 1.5 gpm Showerhead Insert
- Showerhead 1.8 gpm @ 80 psi

Must Order Pressure Balance Rough in Valve Separately. See Valve Section.

CEC Compliant | Cal Green Compliant | Meets EPA WaterSense℠ Standards | NSF Lead-Free Certified | ADA Compliant | UltraSeal™ | SecurePfit™

Pressure Balance Valve Only Trim

Model	Finish	Case Qty	List Price
R89-1BSC	Polished Chrome	3	$78
R89-1BSK	Brushed Nickel	3	$104
R89-1BSY	Tuscan Bronze	3	$140

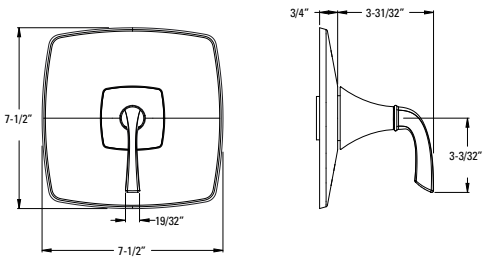

Technical Info

Features:
- SecurePfit™
- Metal Lever Handle
- Hot/Cold Indicator

Must Order Pressure Balance Rough in Valve Separately. See Valve Section.

Diverter Trim Only

Ø16-BSØC	Polished Chrome	3	$73
Ø16-BSØK	Brushed Nickel	3	$88
Ø16-BSØY	Tuscan Bronze	3	$125

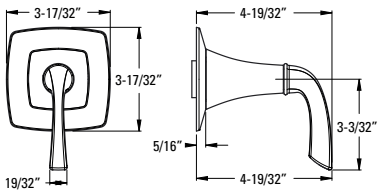

Features:
- SecurePfit™
- Metal Lever Handle and Matching Flange
- Can be Used with 015-2WDX for Cal Green Compliant Applications

Must Order Ø15-4WDX or Ø15-2WDX Rough In Valve Separately. See Valve Section.

CEC Compliant | Cal Green Compliant | Meets EPA WaterSense℠ Standards | NSF Lead-Free Certified | ADA Compliant | UltraSeal™ | SecurePfit™

Bronson™ - Accessories

18" Towel Bar

Model	Finish	Case Qty	List Price
BTB-GL1C	Polished Chrome	3	$54
BTB-GL1K	Brushed Nickel	3	$65
BTB-GL1Y	Tuscan Bronze	3	$75

Technical Info

Holes: • 2-Hole

Features:
- All Metal Construction
- Standard Mounting Bracket
- Concealed Screw Installation
- Mounting Hardware Included

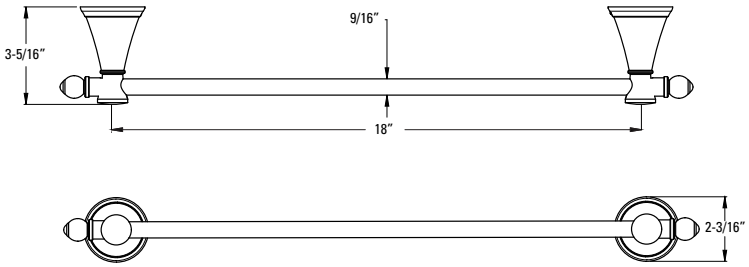

24" Towel Bar

BTB-GL2C	Polished Chrome	3	$59
BTB-GL2K	Brushed Nickel	3	$70
BTB-GL2Y	Tuscan Bronze	3	$80

Holes: • 2-Hole

Features:
- All Metal Construction
- Standard Mounting Bracket
- Concealed Screw Installation
- Mounting Hardware Included

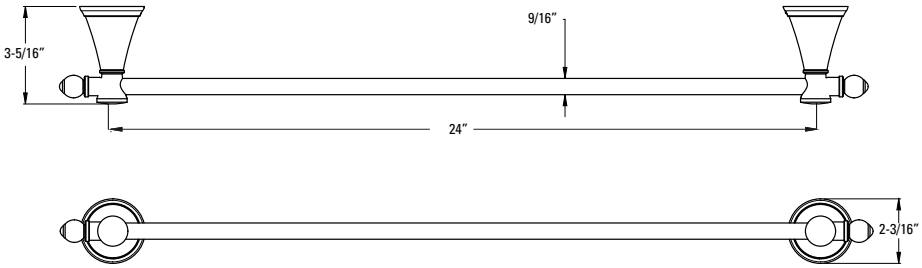

Towel Ring

BRB-GL1C	Polished Chrome	3	$38
BRB-GL1K	Brushed Nickel	3	$49
BRB-GL1Y	Tuscan Bronze	3	$59

Holes: • 1-Hole

Features:
- All Metal Construction
- Standard Mounting Bracket
- Concealed Screw Installation
- Mounting Hardware Included

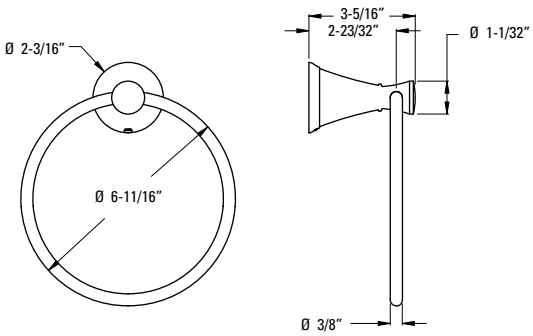

Paper Holder

Model	Finish	Case Qty	List Price
BPH-GL1C	Polished Chrome	3	$38
BPH-GL1K	Brushed Nickel	3	$49
BPH-GL1Y	Tuscan Bronze	3	$59

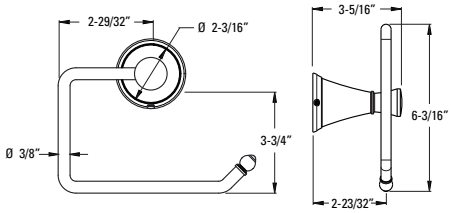

Technical Info

Holes: • 1-Hole

Features:
- All Metal Construction
- Standard Mounting Bracket
- Concealed Screw Installation
- Mounting Hardware Included

Robe Hook

BRH-GL1C	Polished Chrome	3	$22
BRH-GL1K	Brushed Nickel	3	$33
BRH-GL1Y	Tuscan Bronze	3	$44

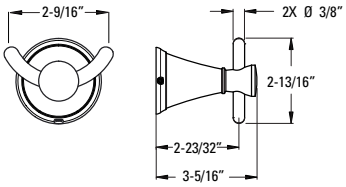

Holes: • 1-Hole

Features:
- All Metal Construction
- Standard Mounting Bracket
- Concealed Screw Installation
- Mounting Hardware Included

SAXTON

4" Centerset Lavatory
LG48-GLØC

8" Widespread Lavatory
LG49-GLØC

3-Hole Roman Tub
RT6-5GLC

Diverter Trim
Ø16-GLØC

Tub & Shower
LG89-8GLC

Shower Only
LG89-7GLC

Valve Only
R89-1GLC

4-Hole Roman Tub
LG6-4GLC

Accessories

18" & 24" Towel Bar
BTB-GL1C & BTB-GL2C

Towel Ring
BRB-GL1C

Paper Holder
BPH-GL1C

Robe Hook
BRH-GL1C

4" Centerset Lavatory

Model	Finish	Case Qty	List Price
LG48-GLØC	Polished Chrome	3	$156
LG48-GLØK	Brushed Nickel	3	$187
LG48-GLØY	Tuscan Bronze	3	$213

Technical Info

Holes: • 3-Hole 4" Installation

Features:
- Ceramic Disc Valves
- Metal Lever Handles
- High Arc Fixed Spout
- Push & Seal Pop-Up
- Drilled for Pop-Up
- Order 941-667* and 972-Ø22*for Optional Metal Drain
- 1.2 gpm @ 60 psi

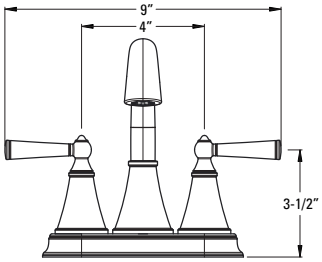

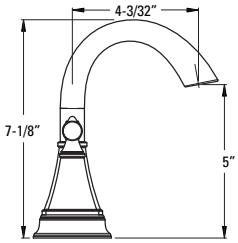

8" Widespread Lavatory

LG49-GLØC	Polished Chrome	3	$239
LG49-GLØK	Brushed Nickel	3	$259
LG49-GLØY	Tuscan Bronze	3	$337

Holes: • 3-Hole 8-15" Installation

Features:
- Ceramic Disc Valves
- Metal Lever Handles
- High Arc Fixed Spout
- Quick Connect Hose Assembly
- All Metal Pop-Up
- Order 971-Ø89Ø to Increase Max. Install Depth to 3"
- 1.2 gpm @ 60 psi

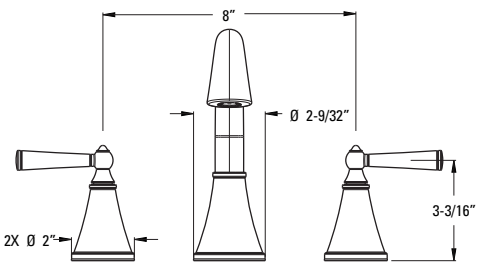

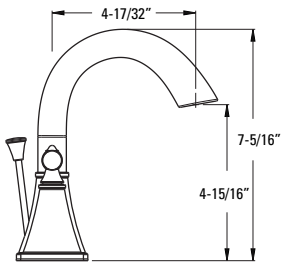

CEC Compliant | Cal Green Compliant | Meets EPA WaterSense℠ Standards | NSF Lead-Free Certified | ADA Compliant | UltraSeal™ | SecurePfit™

Roman Tub Trim

Model	Finish	Case Qty	List Price
RT6-5GLC	Polished Chrome	3	$213
RT6-5GLK	Brushed Nickel	3	$259
RT6-5GLY	Tuscan Bronze	3	$337

Technical Info

Holes: • 3-Hole

Features:
- Ceramic Disc Valves
- Metal Lever Handles
- High Arc Fixed Spout

Must Order ØX6-Ø5ØR or ØX6-15ØR Rough In Valve Separately. See Valve Section.

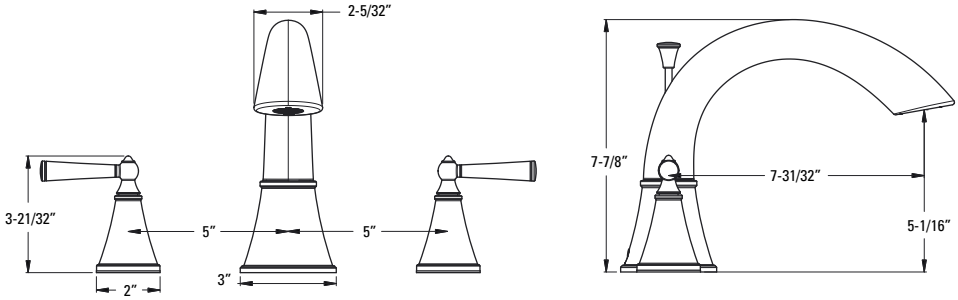

Roman Tub Trim with Hand Shower

LG6-4GLC	Polished Chrome	4	$441
LG6-4GLK	Brushed Nickel	4	$561
LG6-4GLY	Tuscan Bronze	4	$628

Holes: • 4-Hole

Features:
- Ceramic Disc Valves
- Metal Lever Handles
- Fixed Spout
- Hand Shower 1.8 gpm @ 80 psi

Must Order ØX6-44ØR Rough In Valve Separately. See Valve Section.

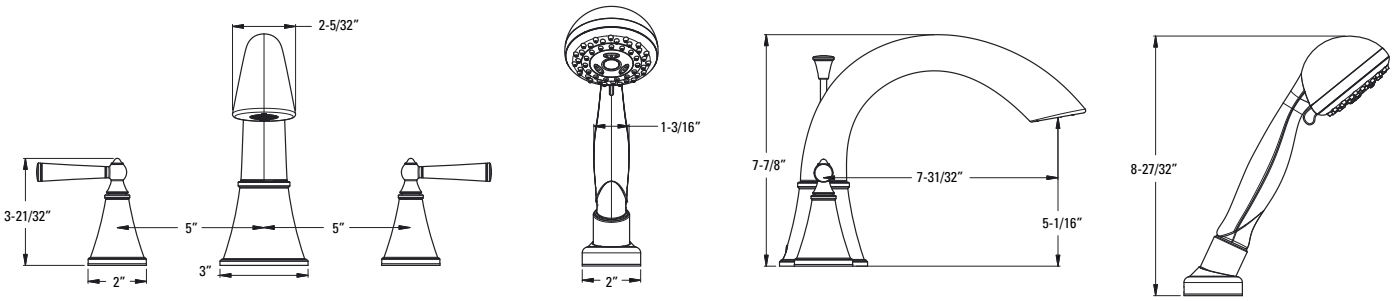

CEC Compliant | Cal Green Compliant | Meets EPA WaterSense℠ Standards | NSF Lead-Free Certified | ADA Compliant | UltraSeal™ | SecurePfit™

Pressure Balance Tub & Shower Trim

Model	Finish	Case Qty	List Price
LG89-8GLC	Polished Chrome	3	$104
LG89-8GLK	Brushed Nickel	3	$230
LG89-8GLY	Tuscan Bronze	3	$264

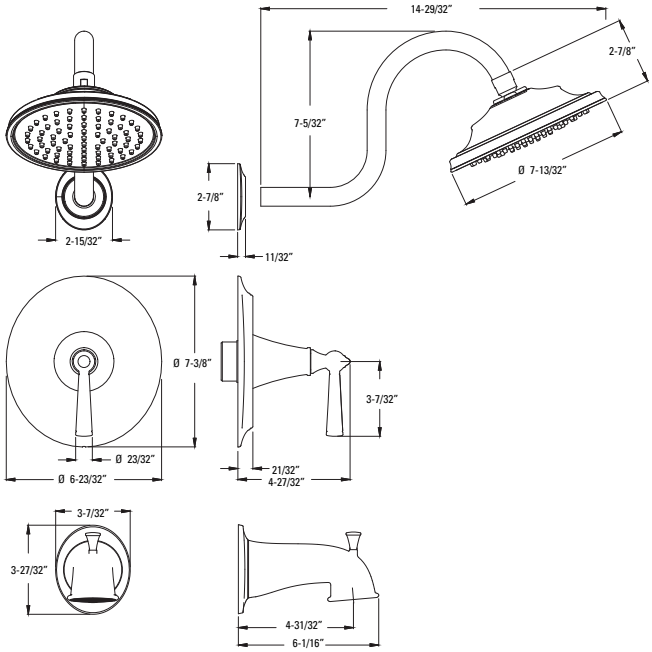

Technical Info

Features:
- SecurePfit™
- Metal Lever Handle
- Hot/Cold Indicator
- Decorative Raincan Showerhead
- Easy To Clean Spray Nozzles
- IP Threaded Metal Diverter Tub Spout
- Order 941-Ø55Ø for 1.5 gpm Showerhead Insert
- Showerhead 1.8 gpm @ 80 psi

Must Order Pressure Balance Rough in Valve Separately. See Valve Section.

Pressure Balance Shower Trim

LG89-7GLC	Polished Chrome	3	$78
LG89-7GLK	Brushed Nickel	3	$202
LG89-7GLY	Tuscan Bronze	3	$240

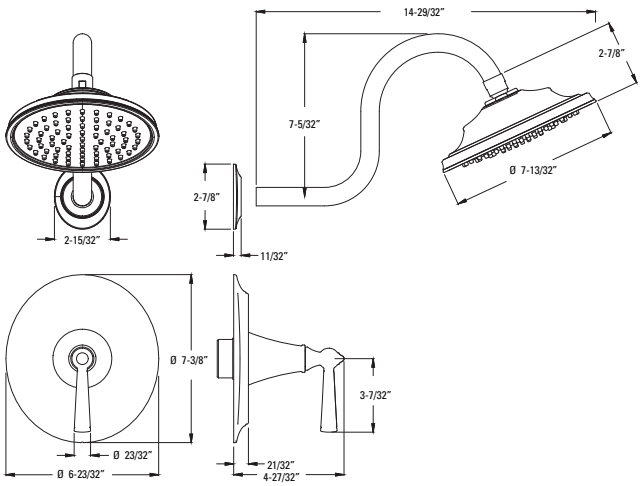

Features:
- SecurePfit™
- Metal Lever Handle
- Hot/Cold Indicator
- Decorative Raincan Showerhead
- Easy To Clean Spray Nozzles
- Order 941-Ø55Ø for 1.5 gpm Showerhead Insert
- Showerhead 1.8 gpm @ 80 psi

Must Order Pressure Balance Rough in Valve Separately. See Valve Section.

CEC Compliant | Cal Green Compliant | Meets EPA WaterSense℠ Standards | NSF Lead-Free Certified | ADA Compliant | UltraSeal™ | SecurePfit™

Pressure Balance Valve Only Trim

Model	Finish	Case Qty	List Price
R89-1GLC	Polished Chrome	3	$62
R89-1GLK	Brushed Nickel	3	$140
R89-1GLY	Tuscan Bronze	3	$168

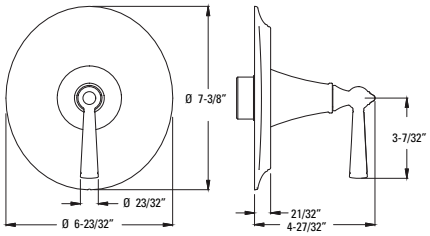

Technical Info

Features:
- SecurePfit™
- Metal Lever Handle
- Hot/Cold Indicator

Must Order Pressure Balance Rough in Valve Separately. See Valve Section.

Diverter Trim Only

Ø16-GLØC	Polished Chrome	3	$56
Ø16-GLØK	Brushed Nickel	3	$78
Ø16-GLØY	Tuscan Bronze	3	$104

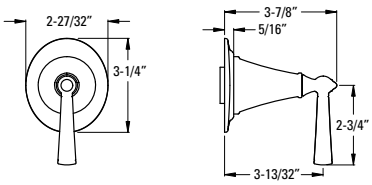

Features:
- SecurePfit™
- Metal Lever Handle and Matching Flange
- Can Be Used with Ø15-2WDX for Cal Green Compliant Applications

Must Order Ø15-4WDX or Ø15-2WDX Rough in Valve Separately. See Valve Section.

CEC Compliant | Cal Green Compliant | Meets EPA WaterSense℠ Standards | NSF Lead-Free Certified | ADA Compliant | UltraSeal™ | SecurePfit™

18" Towel Bar

Model	Finish	Case Qty	List Price
BTB-GL1C	Polished Chrome	3	$54
BTB-GL1K	Brushed Nickel	3	$65
BTB-GL1Y	Tuscan Bronze	3	$75

Technical Info

Holes: • 2-Hole

Features:
- All Metal Construction
- Standard Mounting Bracket
- Concealed Screw Installation
- Mounting Hardware Included

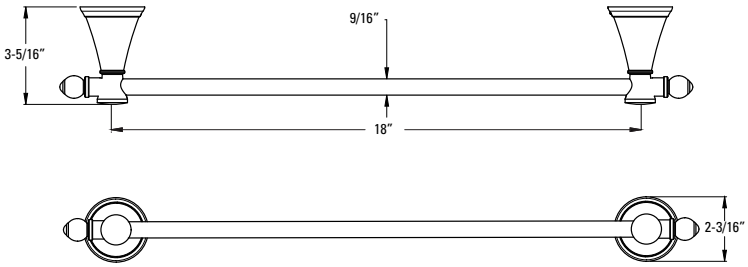

24" Towel Bar

BTB-GL2C	Polished Chrome	3	$59
BTB-GL2K	Brushed Nickel	3	$70
BTB-GL2Y	Tuscan Bronze	3	$80

Holes: • 2-Hole

Features:
- All Metal Construction
- Standard Mounting Bracket
- Concealed Screw Installation
- Mounting Hardware Included

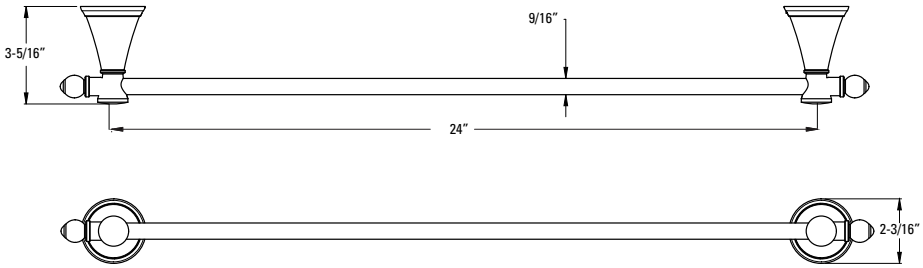

Towel Ring

BRB-GL1C	Polished Chrome	3	$38
BRB-GL1K	Brushed Nickel	3	$49
BRB-GL1Y	Tuscan Bronze	3	$59

Holes: • 1-Hole

Features:
- All Metal Construction
- Standard Mounting Bracket
- Concealed Screw Installation
- Mounting Hardware Included

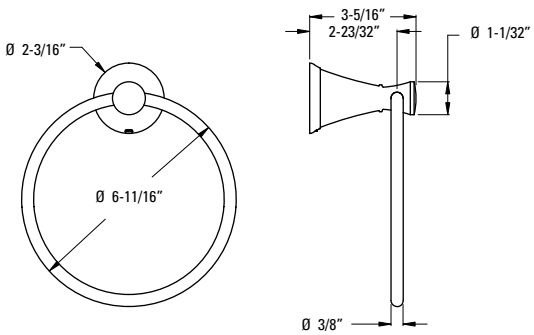

Paper Holder

Model	Finish	Case Qty	List Price
BPH-GL1C	Polished Chrome	3	$38
BPH-GL1K	Brushed Nickel	3	$49
BPH-GL1Y	Tuscan Bronze	3	$59

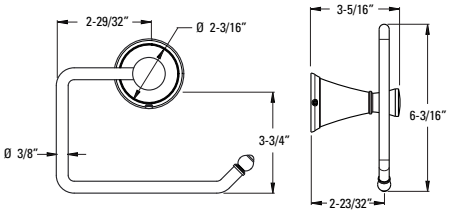

Technical Info

Holes: • 1-Hole

Features:
- All Metal Construction
- Standard Mounting Bracket
- Concealed Screw Installation
- Mounting Hardware Included

Robe Hook

BRH-GL1C	Polished Chrome	3	$22
BRH-GL1K	Brushed Nickel	3	$33
BRH-GL1Y	Tuscan Bronze	3	$44

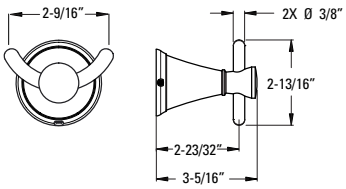

Holes: • 1-Hole

Features:
- All Metal Construction
- Standard Mounting Bracket
- Concealed Screw Installation
- Mounting Hardware Included

AVALON

Single Control Lavatory
LG42-CB1C

4" Centerset Lavatory
LG48-CB1C

8" Widespread Lavatory
LG49-CB1C

Diverter Trim
Ø16-CB1C

Tub & Shower
LG89-8CBC

Shower Only
LG89-7CBC

Valve Only
R89-1CBC

3-Hole Roman Tub
RT6-5CB1C

Accessories

24" Towel Bar
BTB-CB2C

Towel Ring
BRB-CBØC

Paper Holder
BPH-CB1C

Robe Hook
BRH-CBØC

Single Control Lavatory

Model	Finish	Case Qty	List Price
LG42-CB1C	Polished Chrome	3	$166
LG42-CB1K	Brushed Nickel	3	$197
LG42-CB1Y	Tuscan Bronze	3	$223

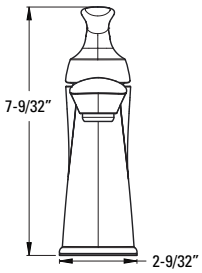

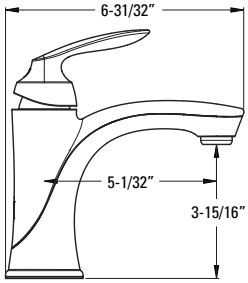

Technical Info

Holes: • 1 or 3 Hole 4" Installation

Features:
- Ceramic Disc Valve
- Metal Lever Handle
- High Arc Fixed Spout
- High Temperature Limit Stop
- Push & Seal Drain Included
- Drilled for Pop Up
- Optional Deck Plate, Order 961-146* and 974-278*
- Order 941-517* and 972-Ø22* for Optional Metal Drain
- 1.2 gpm @ 60 psi

4" Centerset Lavatory

LG48-CB1C	Polished Chrome	3	$156
LG48-CB1K	Brushed Nickel	3	$187
LG48-CB1Y	Tuscan Bronze	3	$213

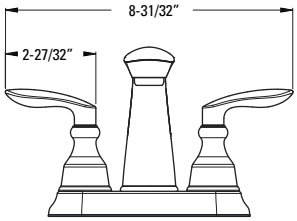

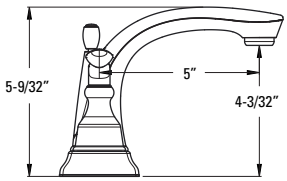

Holes: • 3-Hole 4" Installation

Features:
- Ceramic Disc Valves
- Metal Lever Handles
- High Arc Fixed Spout
- All Metal Pop Up
- 1.2 gpm @ 60 psi

8" Widespread Lavatory

LG49-CB1C	Polished Chrome	3	$239
LG49-CB1K	Brushed Nickel	3	$259
LG49-CB1Y	Tuscan Bronze	3	$337

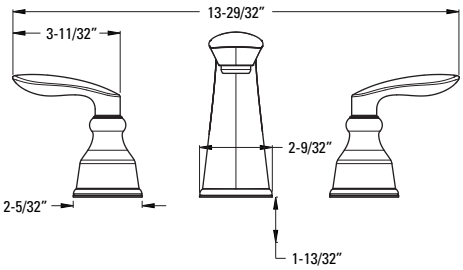

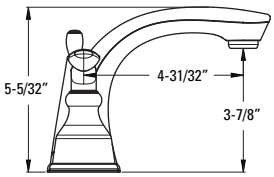

Holes: • 3-Hole 8-15" Installation

Features:
- Ceramic Disc Valves
- Metal Lever Handles
- High Arc Fixed Spout
- Quick Connect Hose Assembly
- All Metal Pop-Up
- Order 971-Ø86Ø to Increase Max. Install Depth to 3"
- 1.2 gpm @ 60 psi

CEC Compliant | Cal Green Compliant | Meets EPA WaterSense℠ Standards | NSF Lead-Free Certified | ADA Compliant | UltraSeal™ | SecurePfit™

	Model	Finish	Case Qty	List Price
Roman Tub Trim	RT6-5CB1C	Polished Chrome	3	$213
	RT6-5CB1K	Brushed Nickel	3	$259
	RT6-5CB1Y	Tuscan Bronze	3	$337

Technical Info

Holes: • 3-Hole

Features:
- Ceramic Disc Valves
- Metal Lever Handles
- High Arc Fixed Spout

Must Order ØX6-Ø5ØR or ØX6-15ØR Rough In Valve Separately. See Valve Section.

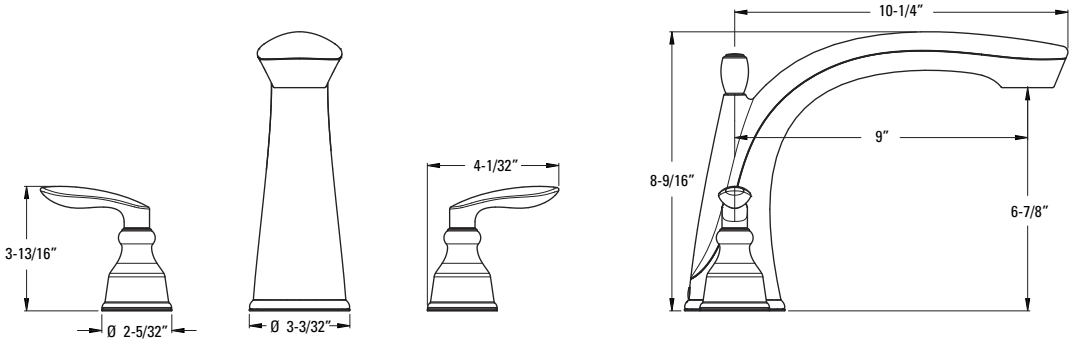

CEC Compliant | Cal Green Compliant | Meets EPA WaterSense℠ Standards | NSF Lead-Free Certified | ADA Compliant | UltraSeal™ | SecurePfit™

Pressure Balance Tub & Shower Trim

Model	Finish	Case Qty	List Price
LG89-8CBC	Polished Chrome	3	$104
LG89-8CBK	Brushed Nickel	3	$230
LG89-8CBY	Tuscan Bronze	3	$264

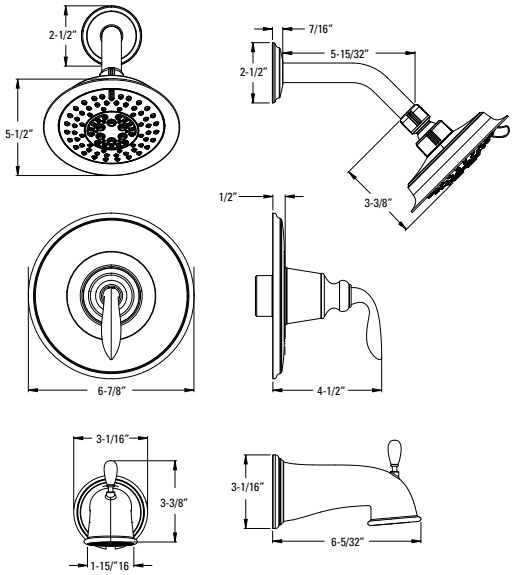

Technical Info

Features:
- SecurePfit™
- Metal Lever Handle
- Hot/Cold Indicator
- Decorative 5-Function Showerhead
- Easy To Clean Spray Nozzles
- IP & Quick Connect Diverted Tub Spout
- Order 941-Ø55Ø for 1.5 gpm
- Showerhead 1.8 gpm @ 80 psi

Must Order Pressure Balance Rough in Valve Separately. See Valve Section.

Pressure Balance Shower Trim

LG89-7CBC	Polished Chrome	3	$78
LG89-7CBK	Brushed Nickel	3	$202
LG89-7CBY	Tuscan Bronze	3	$240

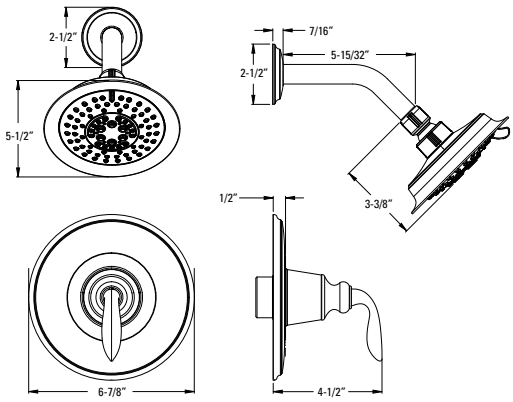

Features:
- SecurePfit™
- Metal Lever Handle
- Hot/Cold Indicator
- Decorative 5-Function Showerhead
- Easy To Clean Spray Nozzles
- Order 941-Ø55Ø for 1.5 gpm
- Showerhead 1.8 gpm @ 80 psi

Must Order Pressure Balance Rough in Valve Separately. See Valve Section.

CEC Compliant | Cal Green Compliant | Meets EPA WaterSense℠ Standards | NSF Lead-Free Certified | ADA Compliant | UltraSeal™ | SecurePfit™

Pressure Balance Valve Only Trim

Model	Finish	Case Qty	List Price
R89-1CBC	Polished Chrome	3	$50
R89-1CBK	Brushed Nickel	3	$113
R89-1CBY	Tuscan Bronze	3	$138

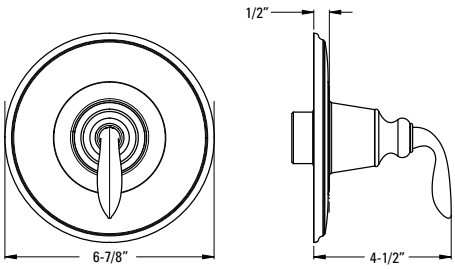

Technical Info

Features:
- SecurePfit™
- Metal Lever Handle
- Hot/Cold Indicator

Must Order Pressure Balance Rough in Valve Separately. See Valve Section.

Diverter Trim Only

Ø16-CB1C	Polished Chrome	3	$62
Ø16-CB1K	Brushed Nickel	3	$86
Ø16-CB1Y	Tuscan Bronze	3	$115

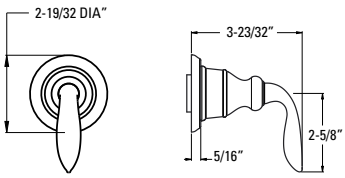

Features:
- Secure Pfit™
- Metal Lever Handle and Matching Flange
- Can be used with Ø15-2WDX for Cal Green Compliant applications

Must Order Ø15-4WDX or Ø15-2WDX Rough In Valve Separately. See Valve Section.

24" Towel Bar

Model	Finish	Case Qty	List Price
BTB-CB2C	Polished Chrome	4	$51
BTB-CB2K	Brushed Nickel	4	$76
BTB-CB2Y	Tuscan Bronze	4	$76

Technical Info

Holes: • 2-Hole

Features:
- All Metal Construction
- Superior Mounting Posts
- Concealed Screw Installation
- Mounting Hardware Included

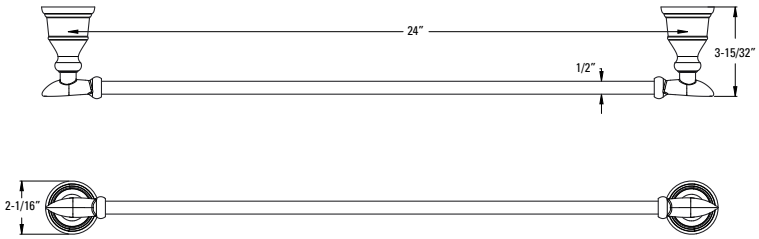

Towel Hook

BRB-CBØC	Polished Chrome	4	$36
BRB-CBØK	Brushed Nickel	4	$54
BRB-CBØY	Tuscan Bronze	4	$54

Holes: • 1-Hole

Features:
- All Metal Construction
- Superior Mounting Posts
- Concealed Screw Installation
- Mounting Hardware Included

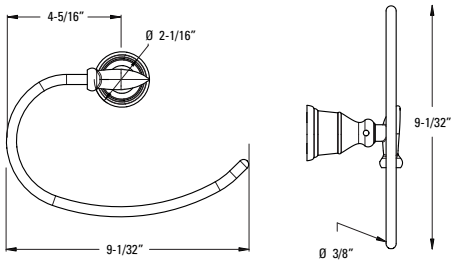

Paper Holder

BPH-CB1C	Polished Chrome	4	$38
BPH-CB1K	Brushed Nickel	4	$58
BPH-CB1Y	Tuscan Bronze	4	$58

Holes: • 1-Hole

Features:
- All Metal Construction
- Superior Mounting Posts
- Concealed Screw Installation
- Mounting Hardware Included

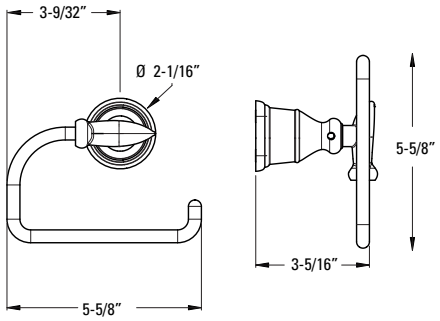

Robe Hook

Model	Finish	Case Qty	List Price
BRH-CBØC	Polished Chrome	4	$24
BRH-CBØK	Brushed Nickel	4	$33
BRH-CBØY	Tuscan Bronze	4	$33

Technical Info

Holes: • 1-Hole

Features:
- All Metal Construction
- Superior Mounting Posts
- Concealed Screw Installation
- Mounting Hardware Included

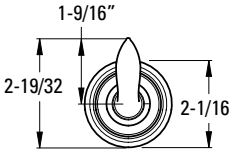

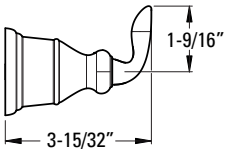

ARKITEK

Single Control Lavatory
LG42-LPMC

8" Widespread Lavatory
LG49-LPMC

3-Hole Roman Tub
RT6-5LPMC

Tub & Shower
LG89-8LPMC

Shower Only
LG89-7LPMC

Valve Only
R89-1LPMC

Accessories

18" & 24" Towel Bar
BTB-DA1C & BTB-DA2C

Towel Ring
BRB-DA1C

Paper Holder
BPH-DA1C

Robe Hook
BRH-DA1C

Single Control Lavatory

Model	Finish	Case Qty	List Price
LG42-LPMC	Polished Chrome	3	$166
LG42-LPMK	Brushed Nickel	3	$197

Technical Info

Holes: • 1 or 3-Hole 4" Installation

Features:
- Ceramic Disc Valve with Temp Limit Stop
- Metal Lever Handle
- 3-Hole Deckplate Sold Separately 961-191*
- Push and Seal Drain Assembly Included
- Order 941-411* and 972-Ø22* for Optional Metal Drain
- 1.2 gpm @ 60 psi

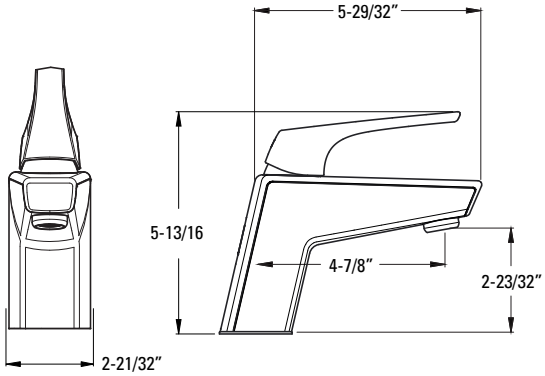

8" Widespread Lavatory

LG49-LPMC	Polished Chrome	3	$239
LG49-LPMK	Brushed Nickel	3	$259

Holes: • 3-Hole 8-15" Installation

Features:
- Ceramic Disc Valves
- Metal Lever Handles
- Fixed Spout
- Quick Connect Hose Assembly
- All Metal Pop-Up
- Order 971-Ø89Ø to Increase Max. Install Depth to 3"
- 1.2 gpm @ 60 psi

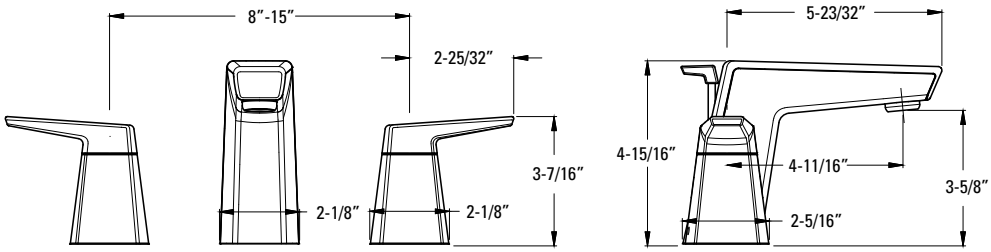

Arkitek™

CEC Compliant | Cal Green Compliant | Meets EPA WaterSense℠ Standards | NSF Lead-Free Certified | ADA Compliant | UltraSeal™ | SecurePfit™

	Model	Finish	Case Qty	List Price
3-Hole Roman Tub Trim	RT6-5LPMC	Polished Chrome	3	$213
	RT6-5LPMK	Brushed Nickel	3	$259

Technical Info

Holes: • 3-Hole

Features:
- Ceramic Disc Valves
- Metal Lever Handles
- Fixed Spout

Must Order ØX6-Ø5ØR or ØX6-15ØR Rough In Valve Separately. See Valve Section.

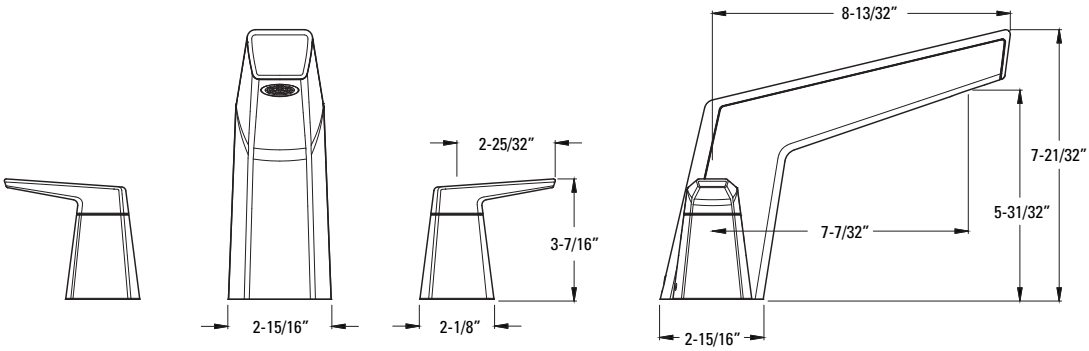

CEC Compliant | Cal Green Compliant | Meets EPA WaterSense℠ Standards | NSF Lead-Free Certified | ADA Compliant | UltraSeal™ | SecurePfit™

Pressure Balance Tub & Shower Trim

Model	Finish	Case Qty	List Price
LG89-8LPMC	Polished Chrome	3	$104
LG89-8LPMK	Brushed Nickel	3	$230

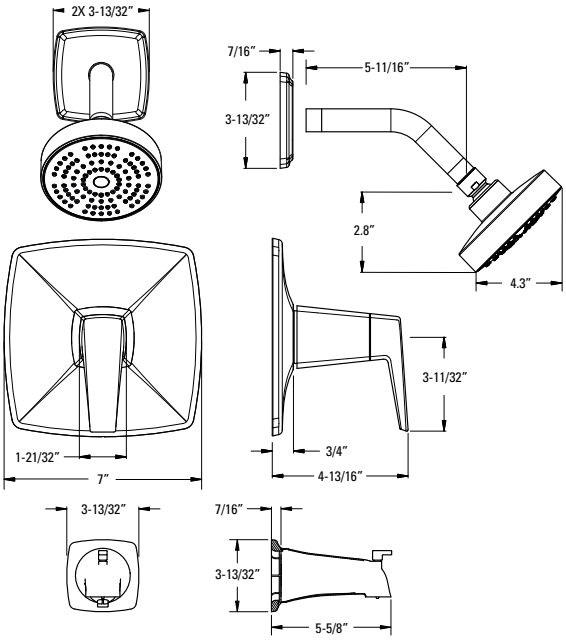

Technical Info

Features:
- SecurePfit™
- Metal Lever Handle
- Hot/Cold Indicator
- Decorative Showerhead
- Easy To Clean Spray Nozzles
- IP & Quick Connect Diverted Tub Spout
- Order 941-Ø55Ø for 1.5 gpm Showerhead Insert
- Showerhead 1.8 gpm @ 80 psi

Must Order Pressure Balance Rough in Valve Separately. See Valve Section.

Pressure Balance Shower Trim

LG89-7LPMC	Polished Chrome	3	$78
LG89-7LPMK	Brushed Nickel	3	$202

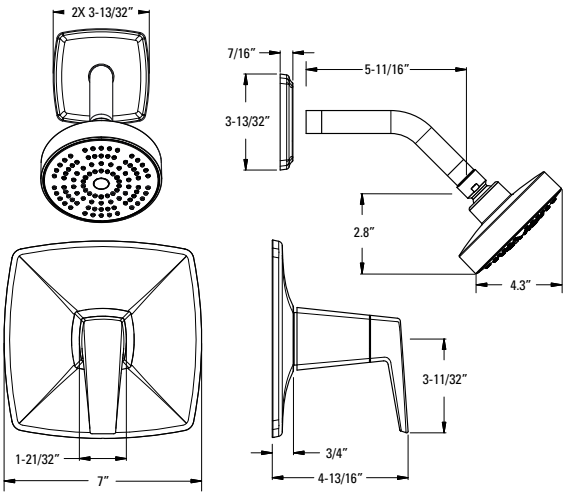

Features:
- SecurePfit™
- Metal Lever Handle
- Hot/Cold Indicator
- Decorative Showerhead
- Easy To Clean Spray Nozzles
- Order 941-Ø55Ø for 1.5 gpm Showerhead Insert
- Showerhead 1.8 gpm @ 80 psi

Must Order Pressure Balance Rough in Valve Separately. See Valve Section.

CEC Compliant | Cal Green Compliant | Meets EPA WaterSense℠ Standards | NSF Lead-Free Certified | ADA Compliant | UltraSeal™ | SecurePfit™

	Model	Finish	Case Qty	List Price
Pressure Balance Valve Only Trim	R89-1LPMC	Polished Chrome	3	$63
	R89-1LPMK	Brushed Nickel	3	$83

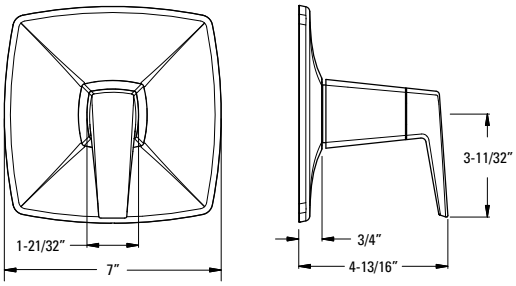

Technical Info

Features:
- SecurePfit™
- Metal Lever Handle
- Hot/Cold Indicator

Must Order Pressure Balance Rough in Valve Separately. See Valve Section.

18" Towel Bar

Model	Finish	Case Qty	List Price
BTB-DA1C	Polished Chrome	3	$52
BTB-DA1K	Brushed Nickel	3	$57

Technical Info

Holes: • 2-Hole

Features:
- All Metal Construction
- Standard Mounting Brackets
- Concealed Screw Installation
- Mounting Hardware Included

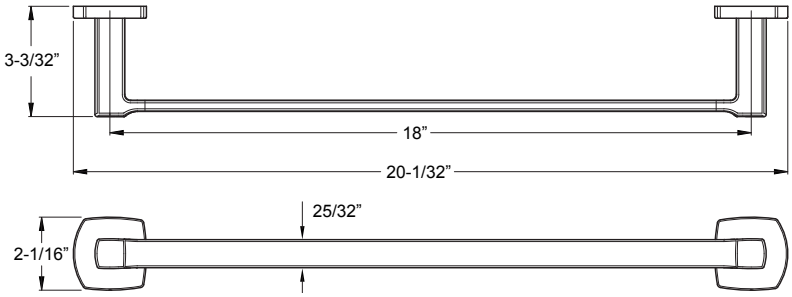

24" Towel Bar

BTB-DA2C	Polished Chrome	3	$54
BTB-DA2K	Brushed Nickel	3	$59

Holes: • 2-Hole

Features:
- All Metal Construction
- Standard Mounting Brackets
- Concealed Screw Installation
- Mounting Hardware Included

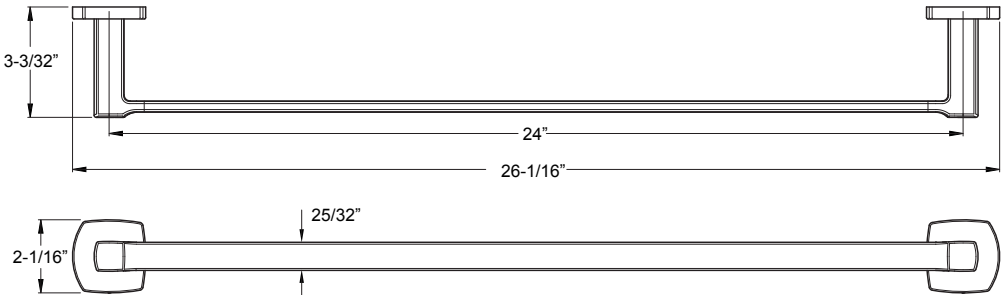

Towel Ring

BRB-DA1C	Polished Chrome	3	$37
BRB-DA1K	Brushed Nickel	3	$40

Holes: • 1-Hole

Features:
- All Metal Construction
- Standard Mounting Brackets
- Concealed Screw Installation
- Mounting Hardware Included

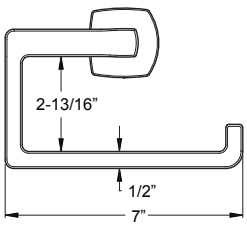

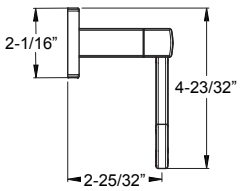

	Model	Finish	Case Qty	List Price
Paper Holder	BPH-DA1C	Polished Chrome	3	$45
	BPH-DA1K	Brushed Nickel	3	$50

Technical Info

Holes: • 2-Hole

Features:
- All Metal Construction
- Standard Mounting Brackets
- Concealed Screw Installation
- Mounting Hardware Included

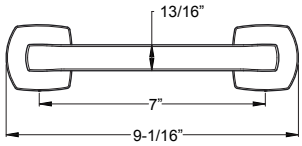

Robe Hook	BRH-DA1C	Polished Chrome	3	$28
	BRH-DA1K	Brushed Nickel	3	$32

Holes: • 1-Hole

Features:
- All Metal Construction
- Standard Mounting Brackets
- Concealed Screw Installation
- Mounting Hardware Included

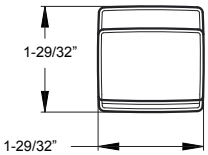

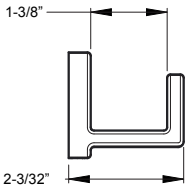

SERRANO

Single Control Lavatory
LG42-SRØC

4" Centerset Lavatory
LG48-SRØC

8" Widespread Lavatory
LG49-SRØC

3-Hole Roman Tub
RT6-5SRC

Tub & Shower
LG89-8SRC

Shower Only
LG89-7SRC

Valve Only
R89-1SRC

Diverter Trim
016-SRØC

Accessories

24" Towel Bar
BTB-R2CC

Towel Ring
BRB-RØCC

Paper Holder
BPH-RØCC

Robe Hook
BRH-RØCC

Single Control Lavatory

Model	Finish	Case Qty	List Price
LG42-SRØC	Polished Chrome	3	$135
LG42-SRØK	Brushed Nickel	3	$166
LG42-SRØY	Tuscan Bronze	3	$192

Technical Info

Holes: • 3-Hole 4" Installation

Features:
- Ceramic Disc Valve
- Metal Lever Handle
- Fixed Spout
- All Metal Pop-Up
- 1.2 gpm @ 60 psi

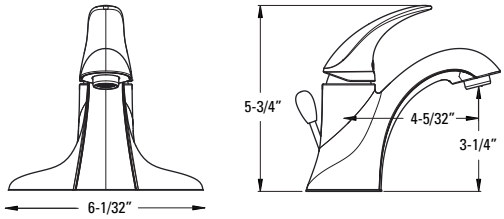

Single Control Lavatory

LG42-SR5C	Polished Chrome	3	$125

Holes: • 3-Hole 4" Installation

Features:
- Ceramic Disc Valve
- Metal Lever Handle
- Fixed Spout
- 50/50 Pop-Up
- 1.2 gpm @ 60 psi

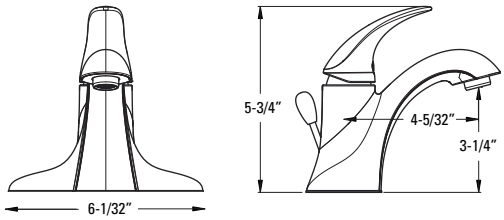

4" Centerset Lavatory

LG48-SRØC	Polished Chrome	3	$120
LG48-SRØK	Brushed Nickel	3	$140
LG48-SRØY	Tuscan Bronze	3	$166

Holes: • 3-Hole 4" Installation

Features:
- Ceramic Disc Valves
- Metal Lever Handles
- Fixed Spout
- All Metal Pop-Up
- 1.2 gpm @ 60 psi

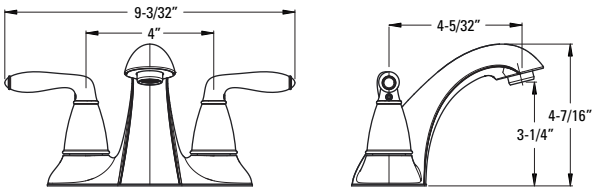

CEC Compliant | Cal Green Compliant | Meets EPA WaterSense℠ Standards | NSF Lead-Free Certified | ADA Compliant | UltraSeal™ | SecurePfit™

4" Centerset Lavatory

Model	Finish	Case Qty	List Price
LG48-SR5C	Polished Chrome	3	$107

Technical Info

Holes: • 3-Hole 4" Installation

Features:
- Ceramic Disc Valves
- Metal Lever Handles
- Fixed Spout
- 50/50 Pop-Up
- 1.2 gpm @ 60 psi

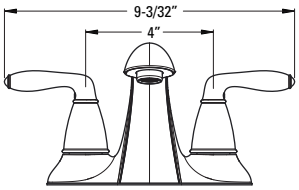

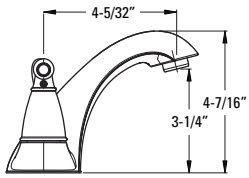

8" Widespread Lavatory

LG49-SR0C	Polished Chrome	3	$197
LG49-SR0K	Brushed Nickel	3	$233
LG49-SR0Y	Tuscan Bronze	3	$285

Holes: • 3-Hole 8-15" Installation

Features:
- Ceramic Disc Valves
- Metal Lever Handles
- High Arc Fixed Spout
- Quick Connect Hose Assembly
- All Metal Pop-Up
- Order 971-Ø89Ø to Increase Max. Install Depth to 3"
- 1.2 gpm @ 60 psi

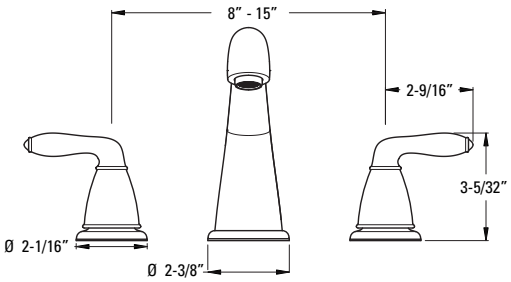

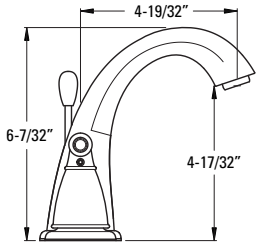

CEC Compliant | Cal Green Compliant | Meets EPA WaterSense℠ Standards | NSF Lead-Free Certified | ADA Compliant | UltraSeal™ | SecurePfit™

Roman Tub Trim

Model	Finish	Case Qty	List Price
RT6-5SRC	Polished Chrome	3	$187
RT6-5SRK	Brushed Nickel	3	$223
RT6-5SRY	Tuscan Bronze	3	$275

Technical Info

Holes: • 3-Hole

Features:
- Ceramic Disc Valves
- Metal Lever Handles
- High Arc Fixed Spout

Must Order ØX6-Ø5ØR or ØX6-15ØR Rough In Valve Separately. See Valve Section.

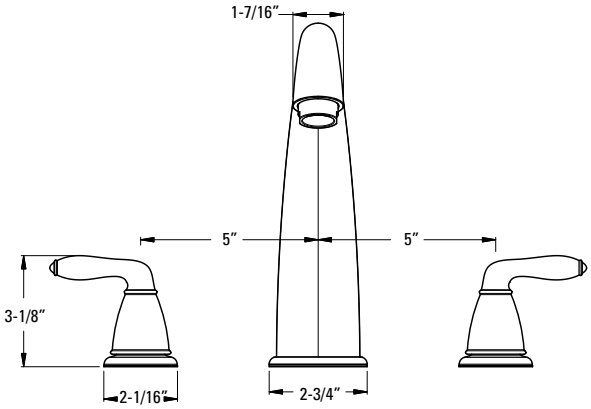

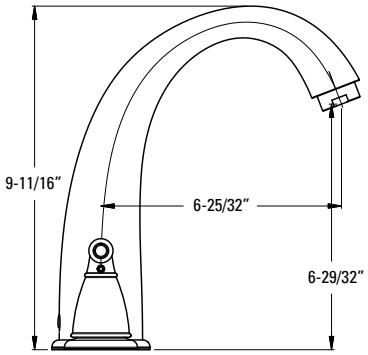

CEC Compliant | Cal Green Compliant | Meets EPA WaterSense℠ Standards | NSF Lead-Free Certified | ADA Compliant | UltraSeal™ | SecurePfit™

Pressure Balance Tub & Shower Trim

Model	Finish	Case Qty	List Price
LG89-8SRC	Polished Chrome	3	$77
LG89-8SRK	Brushed Nickel	3	$150
LG89-8SRY	Tuscan Bronze	3	$176

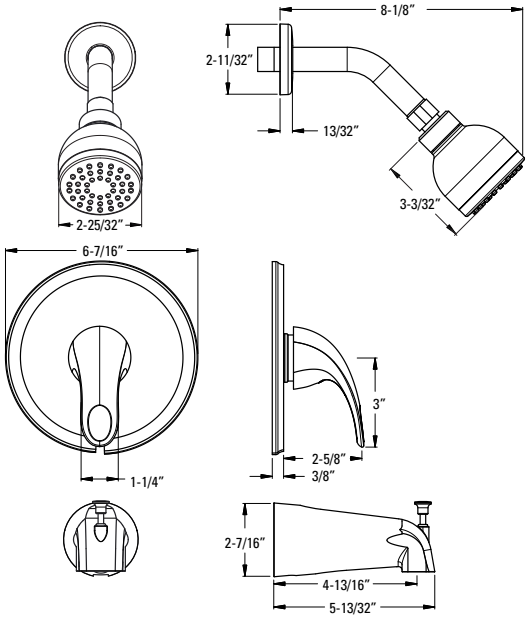

Technical Info

Features:
- Quick Trim™ Wall Flange
- Metal Lever Handle
- Hot/Cold Indicator
- Bell Showerhead
- Easy To Clean Spray Nozzles
- Quick Connect Metal Diverted Tub Spout
- Order 941-Ø55Ø for 1.5 gpm Showerhead Insert
- Showerhead 1.8 gpm @ 80 psi

Must Order Pressure Balance Rough in Valve Separately. See Valve Section.

Pressure Balance Shower Trim

LG89-7SRC	Polished Chrome	3	$58
LG89-7SRK	Brushed Nickel	3	$117
LG89-7SRY	Tuscan Bronze	3	$143

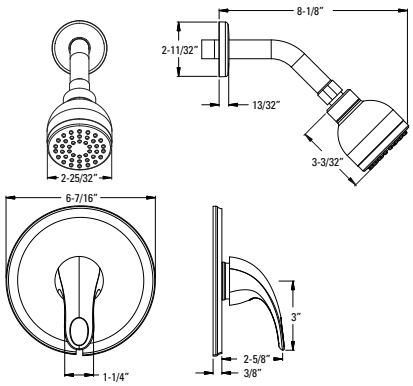

Features:
- Quick Trim™ Wall Flange
- Metal Lever Handle
- Hot/Cold Indicator
- Bell Showerhead
- Easy To Clean Spray Nozzles
- Order 941-Ø55Ø for 1.5 gpm Showerhead Insert
- Showerhead 1.8 gpm @ 80 psi

Must Order Pressure Balance Rough in Valve Separately. See Valve Section.

CEC Compliant | Cal Green Compliant | Meets EPA WaterSense℠ Standards | NSF Lead-Free Certified | ADA Compliant | UltraSeal™ | SecurePfit™

Pressure Balance Valve Only Trim

Model	Finish	Case Qty	List Price
R89-1SRC	Polished Chrome	3	$39
R89-1SRK	Brushed Nickel	3	$75
R89-1SRY	Tuscan Bronze	3	$99

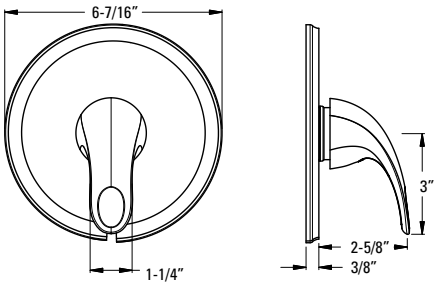

Technical Info

Features:
- Metal Lever Handle
- Hot/Cold Indicator
- Quick Trim™ Wall Flange

Must Order Pressure Balance Rough in Valve Separately. See Valve Section.

Diverter Trim Only

Ø16-SRØC	Polished Chrome	3	$58
Ø16-SRØK	Brushed Nickel	3	$80
Ø16-SRØY	Tuscan Bronze	3	$107

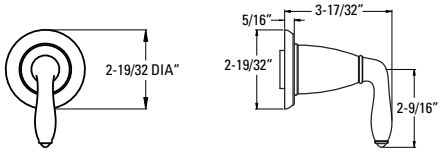

Features:
- SecurePfit™
- Metal Lever Handle and Matching Flange
- Can Be Used With Ø15-2WDX for Cal Green Compliant Applications

Must Order Ø15-4WDX or Ø15-2WDX Rough In Valve Separately. See Valve Section.

CEC Compliant | Cal Green Compliant | Meets EPA WaterSense℠ Standards | NSF Lead-Free Certified | ADA Compliant | UltraSeal™ | SecurePfit™

24" Towel Bar

Model	Finish	Case Qty	List Price
BTB-R2CC	Polished Chrome	6	$31
BTB-R2KK	Brushed Nickel	6	$43
BTB-R2YY	Tuscan Bronze	6	$43

Technical Info

Holes: • 2-Hole

Features:
- All Metal Construction
- Standard Mounting Bracket
- Concealed Screw Installation
- Mounting Hardware Included

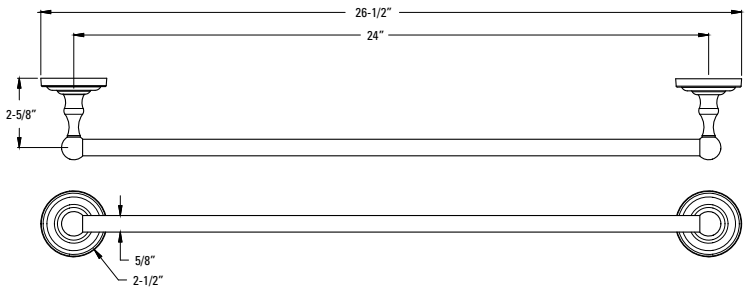

Towel Ring

BRB-RØCC	Polished Chrome	6	$18
BRB-RØKK	Brushed Nickel	6	$25
BRB-RØYY	Tuscan Bronze	6	$25

Holes: • 1-Hole

Features:
- All Metal Construction
- Standard Mounting Bracket
- Concealed Screw Installation
- Mounting Hardware Included

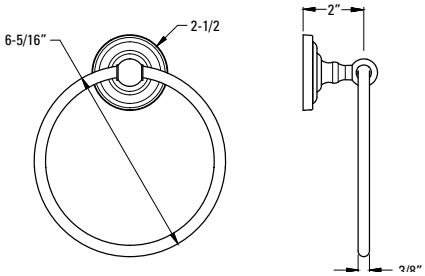

Paper Holder

BPH-RØCC	Polished Chrome	6	$20
BPH-RØKK	Brushed Nickel	6	$27
BPH-RØYY	Tuscan Bronze	6	$27

Holes: • 2-Hole

Features:
- All Metal Construction
- Standard Mounting Bracket
- Concealed Screw Installation
- Mounting Hardware Included

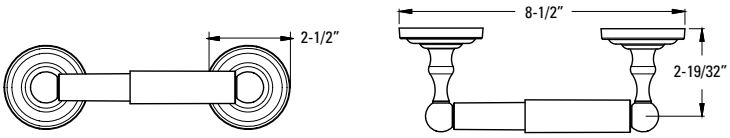

Robe Hook

BRH-RØCC	Polished Chrome	6	$11
BRH-RØKK	Brushed Nickel	6	$12
BRH-RØYY	Tuscan Bronze	6	$12

Holes: • 1-Hole

Features:
- All Metal Construction
- Standard Mounting Bracket
- Concealed Screw Installation
- Mounting Hardware Included

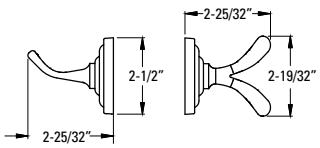

WELLER

Single Control Lavatory
LG42-WRØC

4" Centerset Lavatory
LG48-WRØC

8" Widespread Lavatory
LG49-WRØC

3-Hole Roman Tub
RT6-5WRC

Tub & Shower
LG89-8WRC

Shower Only
LG89-7WRC

Valve Only
R89-1WRC

Accessories

18" Towel Bar
BTB-GL1C

24" Towel Bar
BTB-GL2C

Towel Ring
BRB-GL1C

Paper Holder
BPH-GL1C

Robe Hook
BRH-GL1C

Single Control Lavatory

Model	Finish	Case Qty	List Price
LG42-WRØC	Polished Chrome	3	$135
LG42-WRØK	Brushed Nickel	3	$166
LG42-WRØY	Tuscan Bronze	3	$192

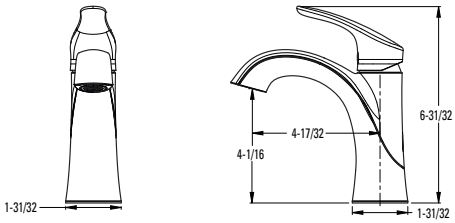

Technical Info

Holes: • 1 or 3-Hole 4" Installation

Features:
- Ceramic Disc Valve
- Metal Lever Handle
- High Arc Fixed Spout
- High Temperature Limit Stop
- 3-Hole Deckplate Sold Separately 961-218*
- Push & Seal Drain Included
- Order 972-Ø22* and 941-621* For Optional Metal Drain
- Drilled for Pop Up
- 1.2 gpm @ 60 psi

4" Centerset Lavatory

LG48-WRØC	Polished Chrome	3	$120
LG48-WRØK	Brushed Nickel	3	$140
LG48-WRØY	Tuscan Bronze	3	$166

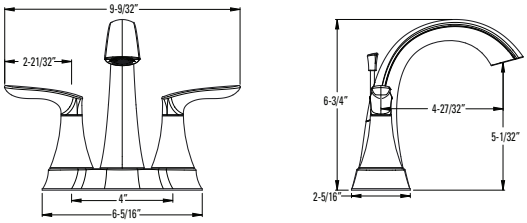

Holes: • 3-Hole 4" Installation

Features:
- Ceramic Disc Valves
- Metal Lever Handles
- High Arc Fixed Spout
- All Metal Pop-Up
- Washerless Cartridge
- 1.2 gpm @ 60 psi

8" Widespread Lavatory

LG49-WRØC	Polished Chrome	3	$197
LG49-WRØK	Brushed Nickel	3	$233
LG49-WRØY	Tuscan Bronze	3	$285

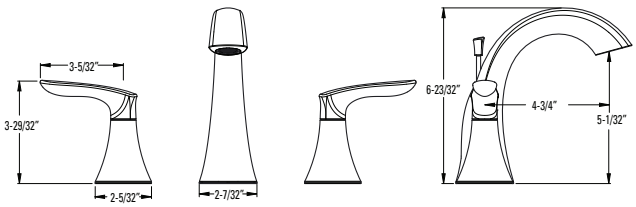

Holes: • 3-Hole 8-15" Installation

Features:
- Ceramic Disc Valves
- Metal Lever Handles
- High Arc Fixed Spout
- Quick Connect Hose Assembly
- All Metal Pop-Up
- Order 971-Ø26Ø to Increase Max. Install Depth to 3"
- 1.2 gpm @ 60 psi

CEC Compliant | Cal Green Compliant | Meets EPA WaterSense℠ Standards | NSF Lead-Free Certified | ADA Compliant | UltraSeal™ | SecurePfit™

3-Hole Roman Tub Trim

Model	Finish	Case Qty	List Price
RT6-5WRC	Polished Chrome	3	$187
RT6-5WRK	Brushed Nickel	3	$223
RT6-5WRY	Tuscan Bronze	3	$275

Technical Info

Holes: • 3-Hole

Features:
- Ceramic Disc Valves
- Metal Lever Handles
- High Arc Fixed Spout

Must Order ØX6-Ø5ØR or ØX6-15ØR Rough In Valve Separately. See Valve Section.

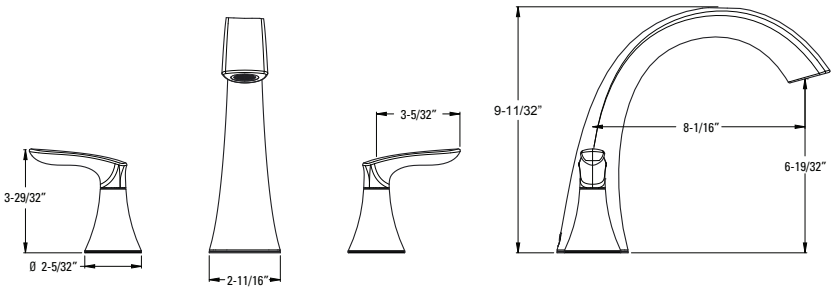

Pressure Balance Tub & Shower Trim

Model	Finish	Case Qty	List Price
LG89-8WRC	Polished Chrome	3	$88
LG89-8WRK	Brushed Nickel	3	$151
LG89-8WRY	Tuscan Bronze	3	$182

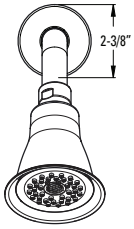

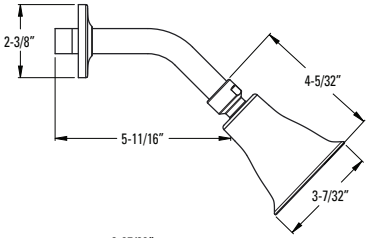

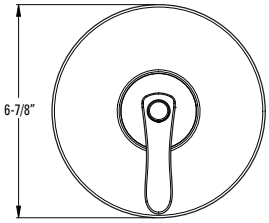

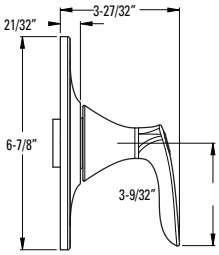

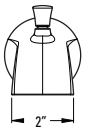

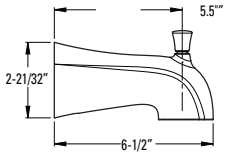

Features:
- Quick Trim™ Wall Flange
- Metal Lever Handle
- Hot/Cold Indicator
- Easy To Clean Spray Nozzles
- 5.5" IP & Quick Connect Diverted Tub Spout
- Order 941-Ø55 for 1.5 gpm Showerhead Insert
- Showerhead 1.8 gpm @ 80 psi

Must Order Pressure Balance Rough in Valve Separately. See Valve Section.

Pressure Balance Shower Trim

LG89-7WRC	Polished Chrome	3	$68
LG89-7WRK	Brushed Nickel	3	$120
LG89-7WRY	Tuscan Bronze	3	$145

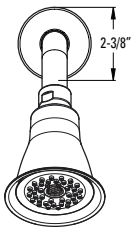

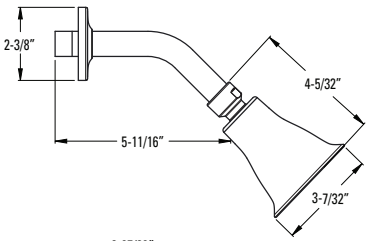

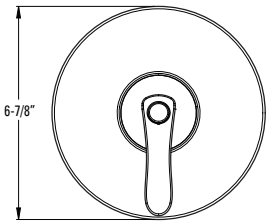

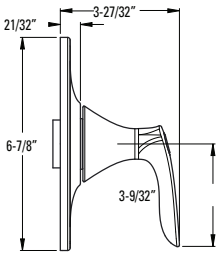

Features:
- Quick Trim™ Wall Flange
- Metal Lever Handle
- Hot/Cold Indicator
- Easy To Clean Spray Nozzles
- Order 941-Ø55 for 1.5 gpm Showerhead Insert
- Showerhead 1.8 gpm @ 80 psi

Must Order Pressure Balance Rough in Valve Separately. See Valve Section.

Pressure Balance Valve Only Trim

Model	Finish	Case Qty	List Price
R89-1WRC	Polished Chrome	3	$47
R89-1WRK	Brushed Nickel	3	$78
R89-1WRY	Tuscan Bronze	3	$104

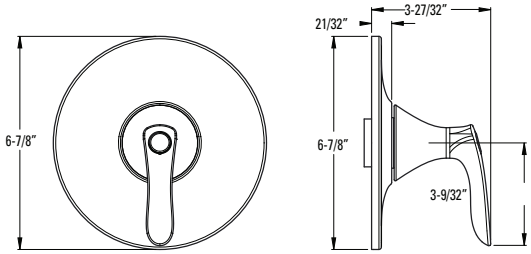

Technical Info

Features:
- Quick Trim™ Wall Flange
- Metal Lever Handle
- Hot/Cold Indicator

Must Order Pressure Balance Rough in Valve Separately. See Valve Section.

18" Towel Bar

Model	Finish	Case Qty	List Price
BTB-GL1C	Polished Chrome	3	$54
BTB-GL1K	Brushed Nickel	3	$65
BTB-GL1Y	Tuscan Bronze	3	$75

Technical Info

Holes: • 2-Hole

Features:
- All Metal Construction
- Standard Mounting Bracket
- Concealed Screw Installation
- Mounting Hardware Included

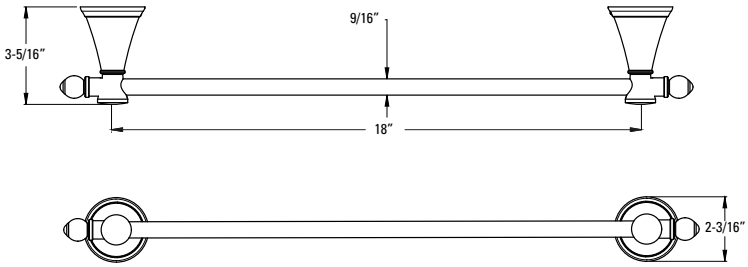

24" Towel Bar

BTB-GL2C	Polished Chrome	3	$59
BTB-GL2K	Brushed Nickel	3	$70
BTB-GL2Y	Tuscan Bronze	3	$80

Holes: • 2-Hole

Features:
- All Metal Construction
- Standard Mounting Bracket
- Concealed Screw Installation
- Mounting Hardware Included

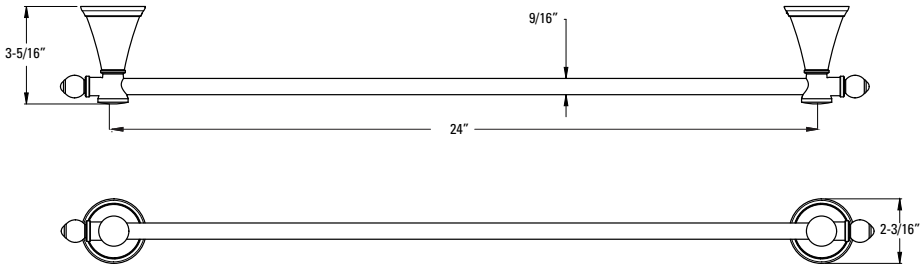

Towel Ring

BRB-GL1C	Polished Chrome	3	$38
BRB-GL1K	Brushed Nickel	3	$49
BRB-GL1Y	Tuscan Bronze	3	$59

Holes: • 1-Hole

Features:
- All Metal Construction
- Standard Mounting Bracket
- Concealed Screw Installation
- Mounting Hardware Included

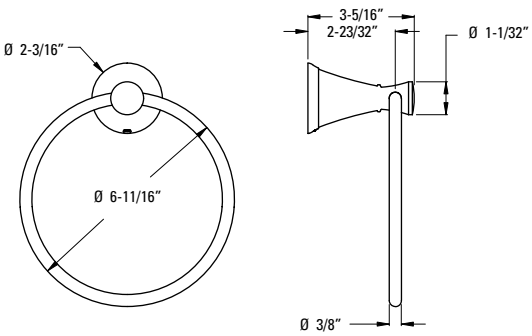

Paper Holder

Model	Finish	Case Qty	List Price
BPH-GL1C	Polished Chrome	3	$38
BPH-GL1K	Brushed Nickel	3	$49
BPH-GL1Y	Tuscan Bronze	3	$59

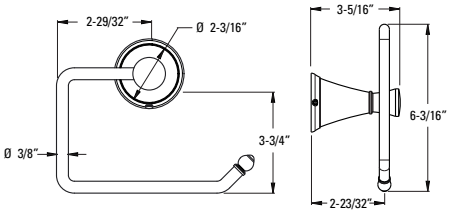

Technical Info

Holes: • 1-Hole

Features:
- All Metal Construction
- Standard Mounting Bracket
- Concealed Screw Installation
- Mounting Hardware Included

Robe Hook

BRH-GL1C	Polished Chrome	3	$22
BRH-GL1K	Brushed Nickel	3	$33
BRH-GL1Y	Tuscan Bronze	3	$44

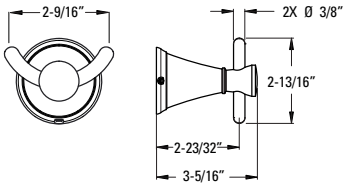

Holes: • 1-Hole

Features:
- All Metal Construction
- Standard Mounting Bracket
- Concealed Screw Installation
- Mounting Hardware Included

PARISA

Single Control Lavatory
LG42-AMCC

Tub & Shower
LG89-8SRC

Shower Only
LG89-7SRC

Accessories

24” Towel Bar
BTB-R2CC

Towel Ring
BRB-RØCC

Paper Holder
BPH-RØCC

Robe Hook
BRH-RØCC

Parisa® - Lavatory Faucets

	Model	Finish	Case Qty	List Price
Single Control Lavatory	LG42-AMCC	Polished Chrome	3	$137
	LG42-AMCK	Brushed Nickel	3	$193

Technical Info

Holes: • 1 or 3-Hole 4" Installation

Features:
- Ceramic Disc Valve
- Metal Lever Handle
- Fixed Spout
- Installs with or Without Deckplate
- All Metal Pop-Up
- 1.2 gpm @ 60 psi

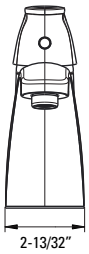

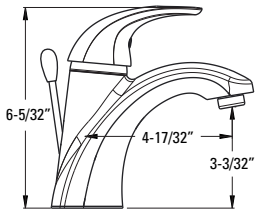

Single Control Lavatory	LG42-ANCC	Polished Chrome	3	$125

Holes: • 1 or 3-Hole 4" Installation

Features:
- Ceramic Disc Valve
- Metal Lever Handle
- Fixed Spout
- Installs with or Without Deckplate
- Less Drain Assembly
- Grid Strainer Sold Separately
- 1.2 gpm @ 60 psi

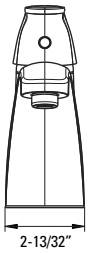

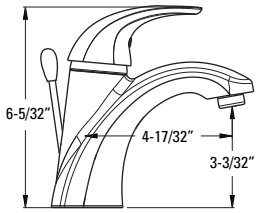

SHOWROOM PREFERRED

Grid Strainer	T47-9GSC	Polished Chrome	6	$44

Features:
- All Metal Grid Strainer
- Overflow
- 1 1/4" Tailpiece

SHOWROOM PREFERRED

Grid Strainer	T47-7GLC	Polished Chrome	6	$44

Features:
- All Metal Grid Strainer
- No Overflow
- 1 1/4" Tailpiece

CEC Compliant | Cal Green Compliant | Meets EPA WaterSense℠ Standards | NSF Lead-Free Certified | ADA Compliant | UltraSeal™ | SecurePfit™

	Model	Finish	Case Qty	List Price
Pressure Balance Tub & Shower Trim	LG89-8SRC	Polished Chrome	3	$77

Technical Info

Features:
- Quick Trim™ Wall Flange
- Metal Lever Handle
- Hot/Cold Indicator
- Bell Showerhead
- Easy To Clean Spray Nozzles
- Quick Connect Metal Diverted Tub Spout
- Order 941-Ø55Ø for 1.5 gpm Showerhead Insert
- Showerhead 1.8 gpm @ 80 psi

Must Order Pressure Balance Rough in Valve Separately. See Valve Section.

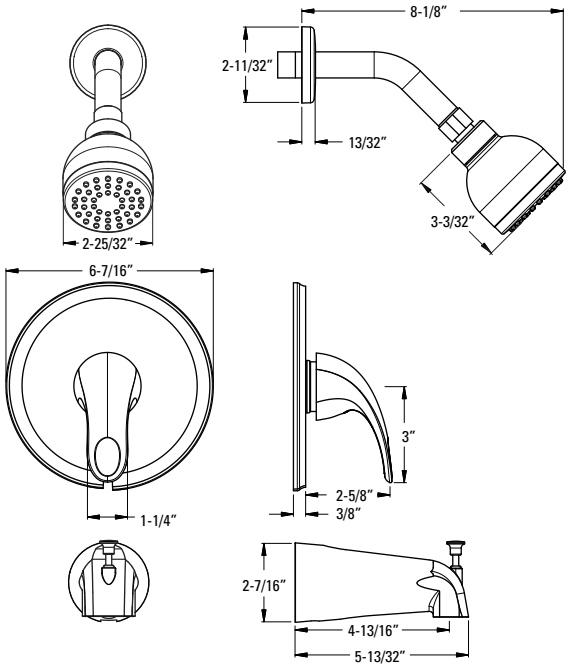

	Model	Finish	Case Qty	List Price
Pressure Balance Shower Trim	LG89-7SRC	Polished Chrome	3	$58

Features:
- Quick Trim™ Wall Flange
- Metal Lever Handle
- Hot/Cold Indicator
- Bell Showerhead
- Easy To Clean Spray Nozzles
- Order 941-Ø55Ø for 1.5 gpm Showerhead Insert
- Showerhead 1.8 gpm @ 80 psi

Must Order Pressure Balance Rough in Valve Separately. See Valve Section.

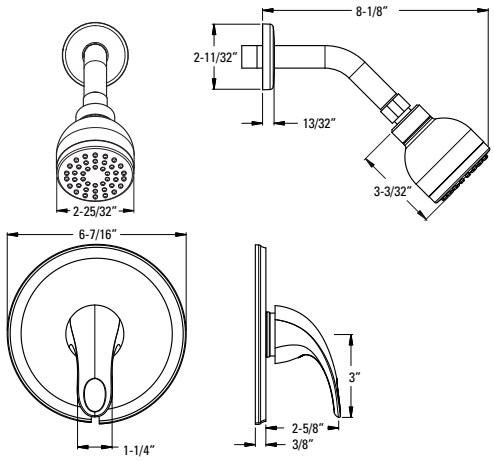

CEC Compliant | Cal Green Compliant | Meets EPA WaterSense℠ Standards | NSF Lead-Free Certified | ADA Compliant | UltraSeal™ | SecurePfit™

Parisa® - Accessories

24" Towel Bar

Model	Finish	Case Qty	List Price
BTB-R2CC	Polished Chrome	6	$31
BTB-R2KK	Brushed Nickel	6	$43
BTB-R2YY	Tuscan Bronze	6	$43

Technical Info

Holes: • 2-Hole

Features:
- All Metal Construction
- Standard Mounting Bracket
- Concealed Screw Installation
- Mounting Hardware Included

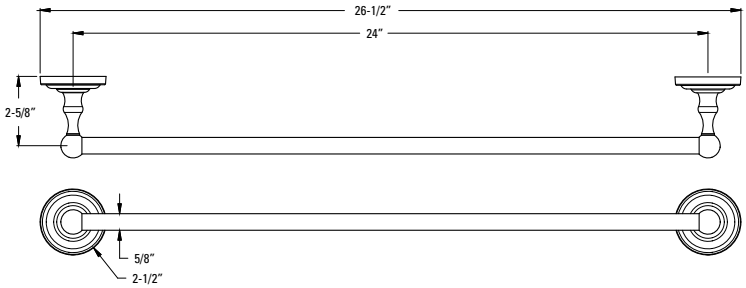

Towel Ring

BRB-RØCC	Polished Chrome	6	$18
BRB-RØKK	Brushed Nickel	6	$25
BRB-RØYY	Tuscan Bronze	6	$25

Holes: • 1-Hole

Features:
- All Metal Construction
- Standard Mounting Bracket
- Concealed Screw Installation
- Mounting Hardware Included

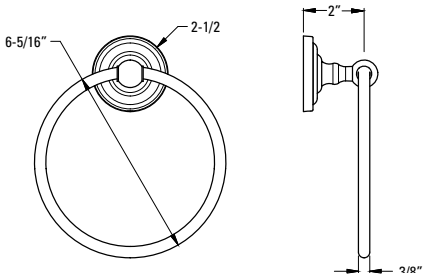

Paper Holder

BPH-RØCC	Polished Chrome	6	$20
BPH-RØKK	Brushed Nickel	6	$27
BPH-RØYY	Tuscan Bronze	6	$27

Holes: • 2-Hole

Features:
- All Metal Construction
- Standard Mounting Bracket
- Concealed Screw Installation
- Mounting Hardware Included

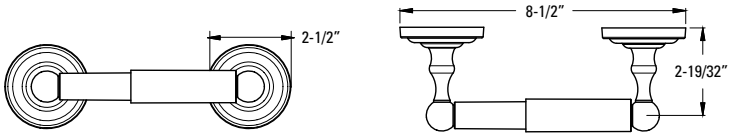

Robe Hook

BRH-RØCC	Polished Chrome	6	$11
BRH-RØKK	Brushed Nickel	6	$12
BRH-RØYY	Tuscan Bronze	6	$12

Holes: • 1-Hole

Features:
- All Metal Construction
- Standard Mounting Bracket
- Concealed Screw Installation
- Mounting Hardware Included

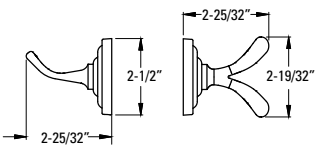

EXTENSION KITS

Available As Parts	Description	Handle Compatability	Finish	Part No.	List Price
Ø1 Series 1" Ext. Kit	For Three-Handle Mixing Valve Bodies Utilizing Ceramic Disc Valves Includes Stem Extensions, Sleeve Extensions and Screw Adapters.	For Use with Acrylic Windsor, Metal Verve, Round Acrylic, Deco Lever, French Lever and Cross Handles. Requires One Kit per Valve Body.	Unfinished	91Ø-ØØ5Ø	$74
	For Two or Three-Handle Mixing Valve Bodies Utilizing Compression Valves. Includes Stem Extensions, Sleeve Extensions and Screw Adapters.	For Use with Acrylic Windsor, Metal Verve, Round Acrylic, Deco Lever, French Lever and Cross Handles. Requires One Kit per Handle.	Unfinished	91Ø-862Ø	$19
		For Use with Classic Windsor and Classic Verve Handles. Requires One Kit per Handle.	Unfinished	91Ø-561Ø	$15
Ø3, Ø5 & Ø7 Series 1" Ext. Kit	For Two-Handle Mixing Valve Bodies Utilizing Ceramic Disc Valves. Includes Stem Extensions, Sleeve Extensions, Screw Adapters.	For Use with Acrylic Windsor, Metal Verve, Round Acrylic, Deco Lever, French Lever and Cross Handles. Requires One Kit per Valve Body.	Unfinished	91Ø-ØØ7Ø	$38
	For Two or Three-Handle Mixing Valve Bodies Utilizing Compression Valves. Includes Stem Extensions, Sleeve Extensions and Screw Adapters.	For Use with Acrylic Windsor, Metal Verve, Round Acrylic, Deco Lever, French Lever and Cross Handles. Requires One Kit per Handle.	Unfinished	91Ø-862Ø	$19
	For Two or Three-Handle Mixing Valve Bodies Utilizing Compression Valves. Includes Stem Extensions, Sleeve Extensions and Screw Adapters.	For Use with Classic Windsor and Classic Verve Handles. Requires One Kit per Handle.	Unfinished	91Ø-561Ø	$15
Ø8 & Ø9 Series 1" Ext. Kit	For Single Control Valve Bodies, Pressure Balanced and Mixing, Utilizing Quick Trim System.	For Use with Round Acrylic, Loop, Round Crystal, Cross, Deco Lever and Genesis Lever Handles. Requires One Kit per Valve Body. **Does Not Work with SecurePfit Trims**	Polished Chrome	91Ø-563A	$20
			Brushed Nickel	91Ø-563K	$25
			Tuscan Bronze	91Ø-563Y	$36
			Rustic Bronze	91Ø-563U	$52
ØT8 Series 2" Ext. Kit	For Single Control 3/4" Thermostatic Valve Bodies	For Use with ØT8-41ØA Valve Bodies Only, Requires 1 Kit per Valve Body	Polished Chrome	9ØØ-ØØ8A	$87
			Brushed Nickel	9ØØ-Ø1ØJ	$112
			Tuscan Bronze	9ØØ-ØØ9Y	$135
Ø14 Series 2" Ext. Kit	For Single Control 3/4" Volume Control Valve Bodies	For Use with Ø14-3ØØA Valve Bodies Only, Requires 1 Kit per Valve Body	Polished Chrome	9ØØ-Ø19A	$64
			Brushed Nickel	9ØØ-Ø21J	$87
			Tuscan Bronze	9ØØ-Ø2ØY	$113
Ø16 Series 2" Ext. Kit	For Single Control Ø16 3 Port Diverter Valve Bodies	For Use with Ø16-6ØØA Valve Bodies Only, Requires 1 Kit per Valve Body	Polished Chrome	9ØØ-Ø3ØA	$110
			Brushed Nickel	9ØØ-Ø32J	$138
			Tuscan Bronze	9ØØ-Ø31Y	$160
Ø8 Secure Pfit Ext. Kit	For ØX8 Secure Pfit Trims	For Use with ØX8 Requires 1 Kit per Valve Body	Unfinished	97Ø-Ø83Ø	$44
Ø15 Series Ext. Kit	Ø15-XWDX Ext. Kit	For Use with Ø15-2WDX and Ø15-4WDX	Unfinished	97Ø-Ø89Ø	$94
LG6 Tub Filler 3" Ext. Kit	Traditional Tub Filler 3" Ext. Kit	For Use with LG6-1TF* Tub Filler	Polished Chrome	91Ø-Ø62A	$116
			Polished Nickel	91Ø-Ø62D	$138
			Brushed Nickel	91Ø-Ø62J	$138
			Tuscan Bronze	91Ø-Ø62Y	$155

	Model	Finish	Case Qty	List Price	Technical Info
Roman Tub Extension Kit	974-375Ø	N/A	1	$38	**Features:** • 1" Extension Kit for Roman Tub Ceramic Valve Bodies • Must Order 2 Per Faucet

Roman Tub Extension Kit Spout Shank	975-Ø15Ø	N/A	1	$18	**Features:** • 4 1/2" Max. Depth Spout Shank • 1 Shank Needed Per Valve

Widespread Extension Kit	971-Ø86Ø	N/A	1	$63	**Features:** • 1" Extension Kit for Widespread Ceramic Valve Bodies • Kit Includes Two Extensions (for Hot and Cold Valve Bodies) • Does Not Work with Pfirst Series Widespreads

Extension Kit For Deep Tubs & Spas	Ø19-17ØK	N/A	12	$21	**Features:** • Extension Kit for 19 Series Waste and Overflow

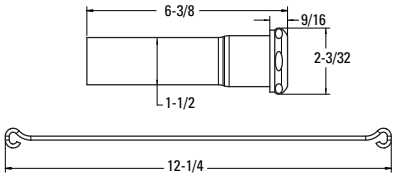

	Model	Finish	Case Qty	List Price	
19 Series Extension Kit	Ø19-AKØØ	N/A	12	$20	**Features:** • ABS Extension Kit for 19-21Ø* Waste and Overflow

Tub Filler Extension Kit

Model	Finish	Case Qty	List Price
91Ø-Ø62A	Polished Chrome	1	$116
91Ø-Ø62J	Brushed Nickel	1	$138
91Ø-Ø62Y	Tuscan Bronze	1	$155
91Ø-Ø62D	Polished Nickel	1	$138

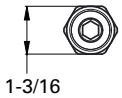

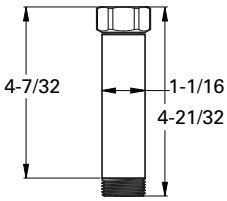

Features:
- 4" Extension
- All Metal Construction
- To Be Used with Traditional Double Riser Free-Standing Tub Filler with Hand Shower RT6-1TF*

THIS PAGE INTENTIONALLY LEFT BLANK

MULTI-HANDLE TUB & SHOWER

	Model	Finish	Case Qty	List Price
Three-Handle Tub & Shower	LGØ1-111Ø	Polished Chrome	4	$163

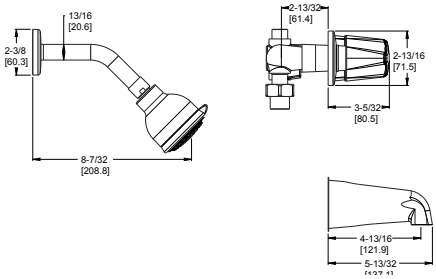

Holes: • 3-Hole 8" Installation

Features:
- 1/2" Sweat Inlets and Outlets
- Two-Function WaterSense™ Showerhead
- Metal Handles, Flanges, Showerhead and Tub Spout
- 5" IP Threaded Non-Diverting Tub Spout
- Ceramic Disc Valves
- 1.8 gpm @ 80 psi

Valve Included. No Additional Valving Needed.

Three-Handle Tub & Shower	LGØ1-311Ø	Polished Chrome	4	$170

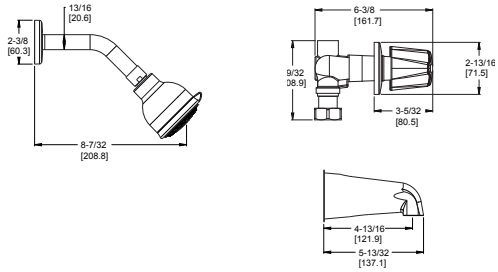

Holes: • 3-Hole 8" Installation

Features:
- 1/2" Union Inlets and 1/2" IP Outlets
- Union Nuts Included
- Two-Function WaterSense™ Showerhead
- Metal Handles, Flanges, Showerhead and Tub Spout
- 5" IP Threaded Non-Diverting Tub Spout
- Ceramic Disc Valves
- 1.8 gpm @ 80 psi

Valve Included. No Additional Valving Needed.

Three-Handle Tub & Shower	LGØ1-321Ø	Polished Chrome	4	$194

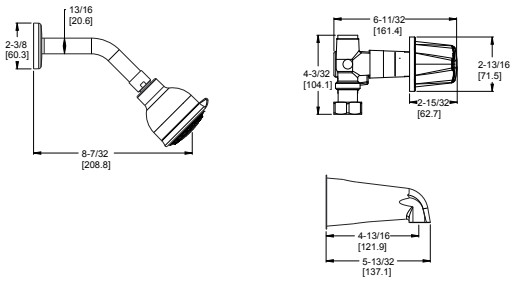

Holes: • 3-Hole 8" Installation

Features:
- 1/2" Union Inlets and 1/2" IP Outlets with By-Pass and Nipple Connection Bodies
- Union Nuts Included
- Two-Function WaterSense™ Showerhead
- Metal Handles, Flanges, Showerhead and Tub Spout
- 5" IP Threaded Non-Diverting Tub Spout
- Ceramic Disc Valves
- 1.8 gpm @ 80 psi

Valve Included. No Additional Valving Needed.

Three-Handle Tub & Shower	LGØ1-341Ø	Polished Chrome	4	$238

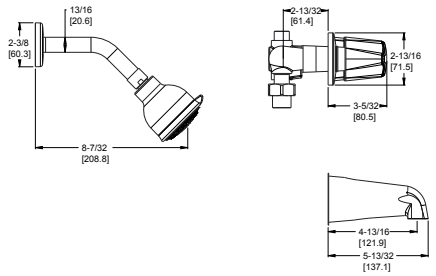

Holes: • 3-Hole 8" Installation

Features:
- 1/2" Union Inlets and 1/2" IP Outlets
- Union Nuts Included
- Two-Function WaterSense™ Showerhead
- With Screwdriver Stops
- Metal Handles, Flanges, Showerhead and Tub Spout
- 5" IP Threaded Non-Diverting Tub Spout
- Ceramic Disc Valves
- 1.8 gpm @ 80 psi

Valve Included. No Additional Valving Needed.

CEC Compliant | Cal Green Compliant | Meets EPA WaterSense℠ Standards | NSF Lead-Free Certified | ADA Compliant | UltraSeal™ | SecurePfit™

	Model	Finish	Case Qty	List Price
Three-Handle Tub & Shower	LGØ1-118Ø	Polished Chrome	4	$163

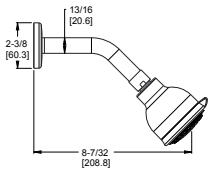

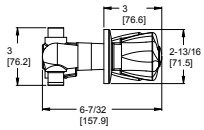

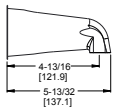

Holes: • 3-Hole 8" Installation

Features:
- 1/2" Sweat Inlets and Outlets
- Acrylic Handles, Flanges, Showerhead and Tub Spout
- 5" IP Threaded Non-Diverting Tub Spout
- Ceramic Disc Valves
- 1.8 gpm @ 80 psi

Valve Included. No Additional Valving Needed.

Three-Handle Tub & Shower	LGØ1-318Ø	Polished Chrome	4	$170

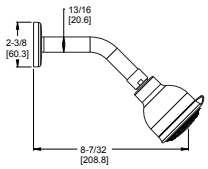

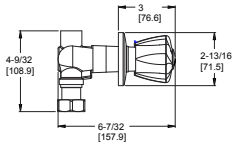

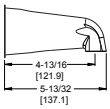

Holes: • 3-Hole 8" Installation

Features:
- 1/2" Union Inlets and 1/2" IP Outlets
- Union Nuts Included
- Two-Function WaterSense™ Showerhead
- Acrylic Handles, Flanges, Showerhead and Tub Spout
- 5" IP Threaded Non-Diverting Tub Spout
- Ceramic Disc Valves
- 1.8 gpm @ 80 psi

Valve Included. No Additional Valving Needed.

Three-Handle Tub & Shower	LGØ1-112Ø	Polished Chrome	4	$164

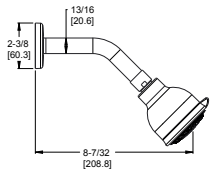

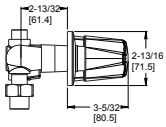

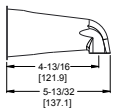

Holes: • 3-Hole 8" Installation

Features:
- 1/2" Copper Sweat Inlets and Outlets
- Two-Function WaterSense™ Showerhea
- Classic Verve Handles, Flanges, Showerhead and Tub Spout
- 5" IP Threaded Non-Diverting Tub Spout
- Compression Valves
- 1.8 gpm @ 80 psi

Valve Included. No Additional Valving Needed.

Three-Handle Tub & Shower	LGØ1-312Ø	Polished Chrome	4	$170

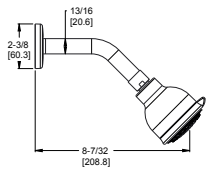

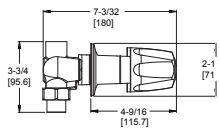

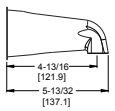

Holes: • 3-Hole 8" Installation

Features:
- 1/2" Union Inlets and 1/2" IP Outlets
- Union Nuts Included
- Two-Function WaterSense™ Showerhead
- Classic Verve Handles, Flanges, Showerhead and Tub Spout
- 5" IP Threaded Non-Diverting Tub Spout
- Compression Valves
- 1.8 gpm @ 80 psi

Valve Included. No Additional Valving Needed.

Three-Handle Tub & Shower	LGØ1-319Ø	Polished Chrome	4	$170

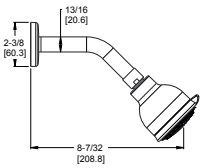

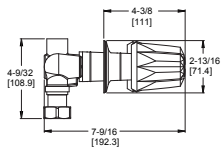

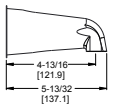

Holes: • 3-Hole 8" Installation

Features:
- 1/2" IP Inlets and Outlets
- Union Nuts Included
- Two-Function WaterSense™ Showerhead
- Classic Acrylic Windsor Handles, Flanges, Showerhead and Tub Spout
- 5" IP Threaded Non-Diverting Tub Spout
- Compression Valves
- 1.8 gpm @ 80 psi

Valve Included. No Additional Valving Needed.

CEC Compliant | Cal Green Compliant | Meets EPA WaterSense℠ Standards | NSF Lead-Free Certified | ADA Compliant | UltraSeal™ | SecurePfit™

	Model	Finish	Case Qty	List Price
Three-Handle Tub & Shower	LGØ1-81BC	Polished Chrome	4	$229

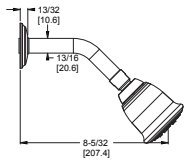

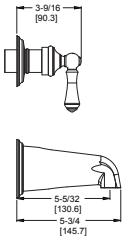

Technical Info

Holes: • 3-Hole 8" Installation

Features:
- Metal Lever Handles
- 5" IP Threaded Non-Diverting Tub Spout
- 1.8 gpm @ 80 psi

Must Order Ø1-31XA Valve Seperately. See Valve Section.

Three-Handle Tub & Shower	LGØ1-81PC	Polished Chrome	4	$229

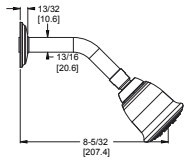

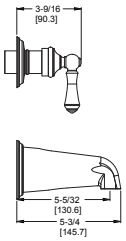

Holes: • 3-Hole 8" Installation

Features:
- Porcelain Lever Handles
- 5" IP Threaded Non-Diverting Tub Spout
- 1.8 gpm @ 80 psi

Must Order Ø1-31XA Valve Seperately. See Valve Section.

Three-Handle Tub & Shower	LGØ1-8CBC	Polished Chrome	4	$247

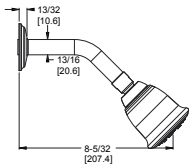

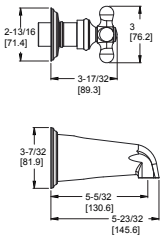

Holes: • 3-Hole 8" Installation

Features:
- Metal Cross Handles
- 5" IP Threaded Non-Diverting Tub Spout
- 1.8 gpm @ 80 psi

Must Order Ø1-31XA Valve Seperately. See Valve Section.

Three-Handle Tub & Shower	LGØ1-8CPC	Polished Chrome	4	$229

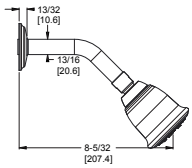

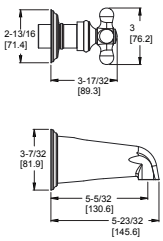

Holes: • 3-Hole 8" Installation

Features:
- Porcelain Cross Handles
- 5" IP Threaded Non-Diverting Tub Spout
- 1.8 gpm @80 psi

Must Order Ø1-31XA Valve Seperately. See Valve Section.

Three-Handle Tub & Shower	LGØ1-911Ø	Polished Chrome	4	$77

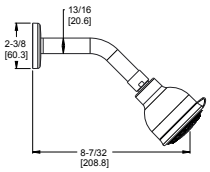

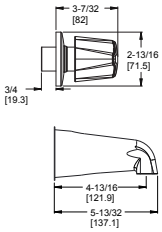

Holes: • 3-Hole 8" Installation

Features:
- Metal Handles
- Two-Function WaterSense™ Showerhead
- 5" IP Threaded Non-Diverting Tub Spout
- 1.8 gpm @ 80 psi

Must Order Ø1-31XA Valve Seperately. See Valve Section.

CEC Compliant | Cal Green Compliant | Meets EPA WaterSense℠ Standards | NSF Lead-Free Certified | ADA Compliant | UltraSeal™ | SecurePfit™

	Model	Finish	Case Qty	List Price
Two-Handle Tub & Shower	LGØ3-611Ø	Polished Chrome	4	$167

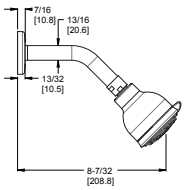

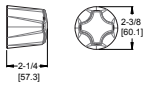

Technical Info

Holes: • 2-Hole 8" Installation

Features:
- 1/2" Union Inlets and 1/2" IP Outlets
- Union Nuts Included
- Two-Function WaterSense™ Showerhead
- Metal Handles, Flanges, Showerhead and Tub Spout
- Compression Valve
- 1.8 gpm @ 80 psi

Valve Included. No Additional Valving Needed.

Two-Handle Tub & Shower	LGØ3-618Ø	Polished Chrome	4	$167

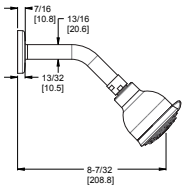

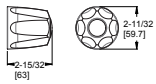

Holes: • 2-Hole 8" Installation

Features:
- 1/2" Union Inlets and 1/2" IP Outlets
- Union Nuts Included
- Two-Function WaterSense™ Showerhead
- Acrylic Handles, Flanges, Showerhead and Tub Spout
- Compression Valve
- 1.8 gpm @ 80 psi

Valve Included. No Additional Valving Needed.

Two-Handle Tub & Shower

	Model	Finish	Case Qty	List Price
Two-Handle Tub & Shower	LGØ3-612Ø	Polished Chrome	4	$167

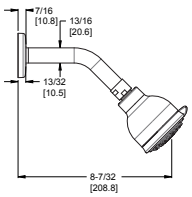

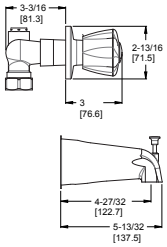

Technical Info

Holes: • 2-Hole 8" Installation

Features:
- Complete Valve and Trim
- 1/2" Union Inlets and 1/2" IP Outlets
- Union Nuts Included
- Classic Metal Verve Handles, Flanges, Showerhead and Tub Spout
- 5" IP Threaded Diverting Tub Spout
- Two-Function WaterSense™ Showerhead
- Compression Valve
- 1.8 gpm @ 80 psi

Two-Handle Tub & Shower	LGØ3-82BC	Polished Chrome	4	$230

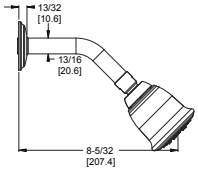

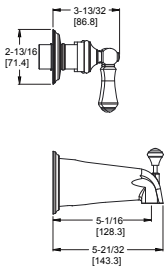

Technical Info

Holes: • 2-Hole 8" Installation

Features:
- Metal Lever Handles
- 5" IP Threaded Diverting Tub Spout
- Must Order Ø3-61XA Valve Separately
- Two-Function WaterSense™ Showerhead
- Ceramic Disc Valves
- 1.8 gpm @ 80 psi

Multi-Handle

Two-Handle Tub Only

	Model	Finish	Case Qty	List Price
Two-Handle Tub	ØØ5-311Ø	Polished Chrome	4	$119

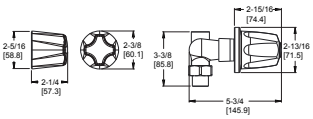

Technical Info

Holes: • 2-Hole 8" Installation

Features:
- Complete Valve and Trim
- 1/2" Union Inlets and 1/2" IP Outlets
- Union Nuts Included
- Classic Verve Handles, Flanges and Tub Spout
- Ceramic Disc Valves
- 5" IP Threaded Non-Diverting

CEC Compliant | Cal Green Compliant | Meets EPA WaterSense℠ Standards | NSF Lead-Free Certified | ADA Compliant | UltraSeal™ | SecurePfit™

	Model	Finish	Case Qty	List Price
Two-Handle Shower	LGØ7-111Ø	Polished Chrome	4	$118

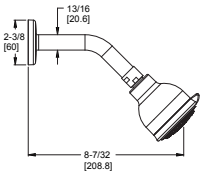

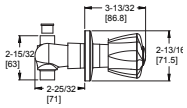

Technical Info

Holes: • 2-Hole 8" Installation

Features:
- Complete Valve and Trim
- 1/2" Sweat Inlets and Outlets
- Two-Function WaterSense™ Showerhead
- Metal Handles, Flanges and Showerhead
- Ceramic Disc Valves
- 1.8 gpm @ 80 psi

Two-Handle Shower	LGØ7-311Ø	Polished Chrome	4	$130

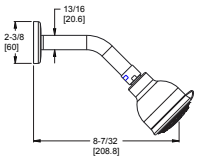

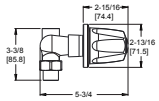

Holes: • 2-Hole 8" Installation

Features:
- Complete Valve and Trim
- 1/2" Union Inlets and 1/2" IP Outlets
- Union Nuts Included
- Two-Function WaterSense™ Showerhead
- Metal Handles, Flanges and Showerhead
- Ceramic Disc Valves
- 1.8 gpm @ 80 psi

Two-Handle Shower	LGØ7-118Ø	Polished Chrome	4	$118

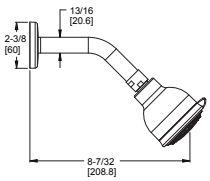

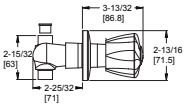

Holes: • 2-Hole 8" Installation

Features:
- Complete Valve and Trim
- 1/2" Sweat Inlets and Outlets
- Two-Function WaterSense™ Showerhead
- Acrylic Handles, Flanges and Showerhead
- Ceramic Disc Valves
- 1.8 gpm @ 80 psi

Two-Handle Shower	LGØ7-312Ø	Polished Chrome	4	$130

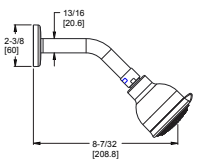

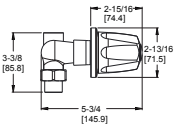

Holes: • 2-Hole 8" Installation

Features:
- Complete Valve and Trim
- 1/2" Union Inlets and 1/2" IP Outlets
- Union Nuts Included
- Two-Function WaterSense™ Showerhead
- Metal Handles, Flanges and Showerhead
- Ceramic Disc Valves
- 1.8 gpm @ 80 psi

CEC Compliant | Cal Green Compliant | Meets EPA WaterSense℠ Standards | NSF Lead-Free Certified | ADA Compliant | UltraSeal™ | SecurePfit™

Two-Handle Shower	LGØ7-81BC	Polished Chrome	4	$188

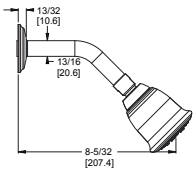

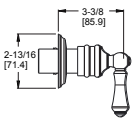

Holes: • 2-Hole 8" Installation

Features:
- Metal Lever Handles
- Must Order Ø7-31XA Valve Separately
- 1.8 gpm @ 80 psi

Two-Handle Shower	LGØ7-8CBC	Polished Chrome	4	$202

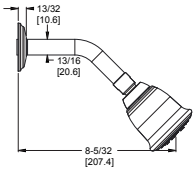

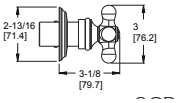

Holes: • 2-Hole 8" Installation

Features:
- Metal Lever Handles
- Must Order Ø7-31XA Valve Separately
- 1.8 gpm @ 80 psi

Two-Handle Shower	LGØ7-8CPC	Polished Chrome	4	$188

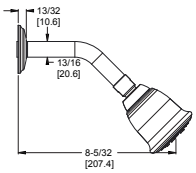

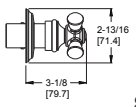

Holes: • 2-Hole 8" Installation

Features:
- Porcelain Cross Handles
- Must Order Ø7-31XA Valve Separately
- 1.8 gpm @ 80 psi

CEC Compliant | Cal Green Compliant | Meets EPA WaterSense℠ Standards | NSF Lead-Free Certified | ADA Compliant | UltraSeal™ | SecurePfit™

	Model	Finish	Case Qty	List Price
11-13 Series Shower Valves	Ø11-411Ø	Polished Chrome	4	$99

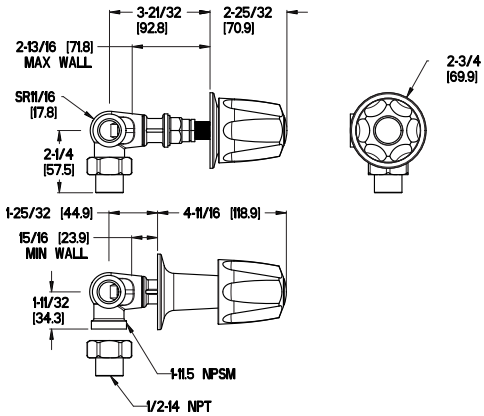

Technical Info

Holes: • 2-Hole Adjustable Installation

Features:
- Complete Loose Body Valve and Trim
- 1/2" Union Inlet (Corner)
- Hot & Cold
- Metal Verve Handles

	Model	Finish	Case Qty	List Price
2- or 3-Handle Rebuild Kit	S1Ø-22ØØ	Polished Chrome	8	$72
	S1Ø-2ØØØ	Polished Chrome	8	$57

Technical Info

Features:
- Acrylic Windsor Handles
- Compression Stems and Seats
- S1Ø-22Ø Kit Includes 3 Handles
- S1Ø-2ØØ Kit Includes 2 Handles

2- or 3-Handle Rebuild Kit	S1Ø-23ØØ	Polished Chrome	8	$69
	S1Ø-21ØØ	Polished Chrome	8	$56

Features:
- Metal Verve Handles
- Compression Stems and Seats
- S1Ø-23Ø Kit Includes 3 Handles
- S1Ø-21Ø Kit Includes 2 Handles

3-Handle Rebuild Kit	S1Ø-33ØØ	Polished Chrome	8	$97

Features:
- Porcelain Cross Handles
- Compression Stems and Seats
- Kit Includes 3 Handles

3-Handle Rebuild Kit	S1Ø-32ØØ	Polished Chrome	8	$93

Features:
- Porcelain Lever Handles
- Compression Stems and Seats
- Kit Includes 3 Handles

2- or 3-Handle Rebuild Kit Avalon Handles	S1Ø-43ØK	Brushed Nickel	3	$139
	S1Ø-43ØY	Tuscan Bronze	3	$177
	S1Ø-4ØØK	Brushed Nickel	3	$108
	S1Ø-4ØØY	Tuscan Bronze	3	$143

Features:
- Avalon Lever Handle
- Compression Stems and Seats
- S1Ø-43ØK & S1Ø-43ØY Kits Include 3 Handles
- S1Ø-4ØØK & S1Ø-4ØØY Kits Include 2 Handles
- Includes Shower Arm & Flange
- Showerhead & Tub Spout Sold Separately

5" Metal Tub Spout	92Ø-Ø22A	Polished Chrome	1	$48
	92Ø-Ø22J	Brushed Nickel	1	$57
	92Ø-Ø22Y	Tuscan Bronze	1	$65

Not-diverting

Diverting

	92Ø-411A	Polished Chrome	1	$23
	92Ø-411J	Brushed Nickel	1	$30
	92Ø-411Y	Tuscan Bronze	1	$50

STEP ONE: Remove old trim

STEP TWO: Unscrew valve stems, insert new stems

STEP THREE: Replace with new upgraded trim

CEC Compliant | Cal Green Compliant | Meets EPA WaterSense℠ Standards | NSF Lead-Free Certified | ADA Compliant | UltraSeal™ | SecurePfit™

SHOWERHEADS, HANDHELDS & SHOWER COMPONENTS

SHOWROOM PREFERRED

Rhen™ Showerhead

Model	Finish	Case Qty	List Price
973-264A	Polished Chrome	1	$98
973-264J	Brushed Nickel	1	$119
973-264B	Matte Black	1	$125
973-264BG	Brushed Gold	1	$130

Available Fall 2018

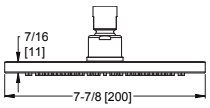

Technical Info

Features:
- Raincan Showerhead
- Easy To Clean Spray Nozzles
- Brass Ball Joint
- Shower Arm and Flange Sold Separately
- Order 941-Ø55Ø for 1.5 gpm Showerhead Insert
- Showerhead 1.8 gpm @ 80 psi

SHOWROOM PREFERRED

Kenzo™ Raincan Showerhead

973-228A	Polished Chrome	1	$78
973-228J	Brushed Nickel	1	$101
973-228D	Polished Nickel	1	$101
973-228B	Matte Black	1	$142
973-228Y	Tuscan Bronze	1	$110
973-228BG	Brushed Gold	1	$121

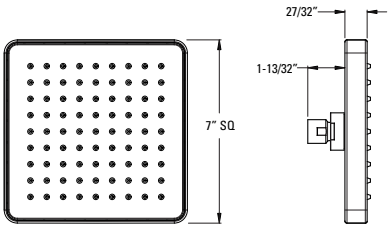

Features:
- Raincan Showerhead
- Easy To Clean Spray Nozzles
- Shower Arm and Flange Sold Separately
- Order 941-Ø55Ø for 1.5 gpm Showerhead Insert
- Showerhead 1.8 gpm @ 80 psi

SHOWROOM PREFERRED

Marielle™ Raincan Showerhead

LG15-M95C	Polished Chrome	6	$118
LG15-M95K	Brushed Nickel	6	$141
LG15-M95Y	Tuscan Bronze	6	$215

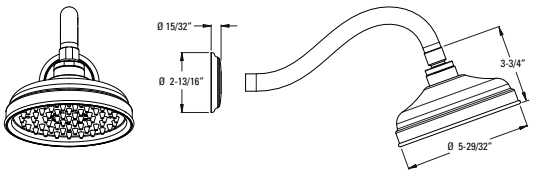

Features:
- Decorative Raincan Showerhead
- Easy To Clean Spray Nozzles
- Includes Shower Arm and Flange
- Order 941-Ø55Ø for 1.5 gpm Showerhead Insert
- Brass Ball Joint
- Showerhead 1.8 gpm @ 80 psi

CEC Compliant | Cal Green Compliant | Meets EPA WaterSense℠ Standards | NSF Lead-Free Certified | ADA Compliant | UltraSeal™ | SecurePfit™

SHOWROOM PREFERRED

Marielle™ Raincan Showerhead

LG15-M9ØC	Polished Chrome	12	$88
LG15-M9ØK	Brushed Nickel	12	$106
LG15-M9ØY	Tuscan Bronze	12	$188

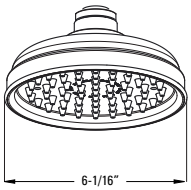

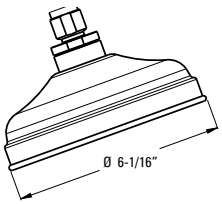

Features:
- Decorative Raincan Showerhead
- Easy To Clean Spray Nozzles
- Order 941-Ø55Ø for 1.5 gpm Showerhead Insert
- Brass Ball Joint
- Showerhead 1.8 gpm @ 80 psi

SHOWROOM PREFERRED

Model	Finish	Case Qty	List Price
LG15-DE1C	Polished Chrome	3	$90
LG15-DE1K	Brushed Nickel	3	$116
LG15-DE1D	Polished Nickel	3	$131
LG15-DE1Y	Tuscan Bronze	3	$116

Arterra™ Showerhead

5

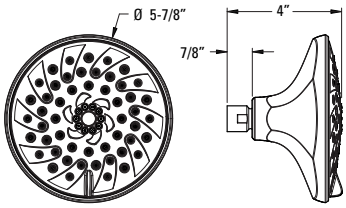

Technical Info

Features:
- Multi-Function Showerhead
- Easy To Clean Spray Nozzles
- Functions:
  - Penetrating Massage
  - Rain Spray, Invigorating Spray
  - Champagne/RainCan Combo Spray
  - Champagne Spray
- Showerhead 1.8 gpm @ 80 psi

SHOWROOM PREFERRED

Contempra™ Raincan Showerhead

973-241A	Polished Chrome	1	$91
973-241J	Brushed Nickel	1	$102
973-241B	Matte Black	1	$136
973-241BG	Brushed Gold	1	$164

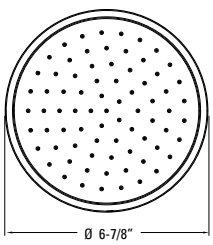

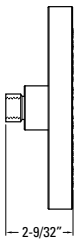

Features:
- Raincan Showerhead
- Easy To Clean Spray Nozzles
- Brass Ball Joint
- Order 941-Ø55Ø for 1.5 gpm Showerhead Insert
- Showerhead 1.8 gpm @ 80 psi

CEC Compliant | Cal Green Compliant | Meets EPA WaterSense℠ Standards | NSF Lead-Free Certified | ADA Compliant | UltraSeal™ | SecurePfit™

Showers

SHOWROOM PREFERRED

Water Saving Showerhead

Model	Finish	Case Qty	List Price
Ø15-NC11	Polished Chrome	6	$91
Ø15-NK11	Brushed Nickel	6	$102

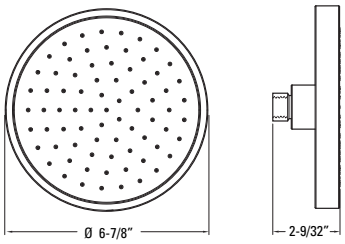

Technical Info

Features:
- Raincan Showerhead
- Easy To Clean Spray Nozzles
- Brass Ball Joint
- Showerhead 1.5 gpm @ 80 psi

SHOWROOM PREFERRED

Raincan Showerhead

LG15-TH1C	Polished Chrome	4	$116
LG15-TH1K	Brushed Nickel	4	$173

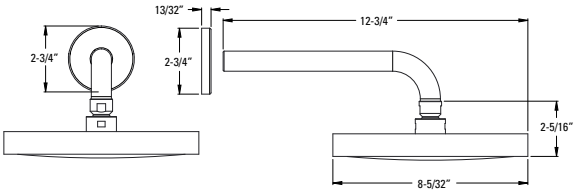

Features:
- Raincan Showerhead
- Shower Arm and Wall Flange Included
- Easy To Clean Spray Nozzles
- Order 941-Ø55Ø for 1.5 gpm Showerhead Insert
- Brass Ball Joint
- Showerhead 1.8 gpm @ 80 psi

SHOWROOM PREFERRED

Water Saving Showerhead

Ø15-HV1C	Polished Chrome	4	$90
Ø15-HV1K	Brushed Nickel	4	$106
Ø15-HV1Y	Tuscan Bronze	4	$152

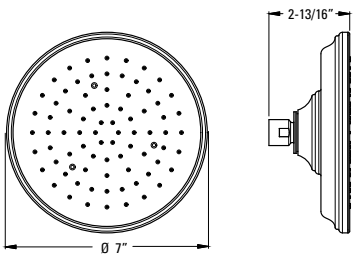

Features:
- Raincan Showerhead
- Easy To Clean Spray Nozzles
- Brass Ball Joint
- Showerhead 1.5 gpm @ 80 psi

CEC Compliant | Cal Green Compliant | Meets EPA WaterSense℠ Standards | NSF Lead-Free Certified | ADA Compliant | UltraSeal™ | SecurePfit™

Deckard™ Showerhead

Model	Finish	Case Qty	List Price
973-255A	Polished Chrome	1	$31
973-255J	Brushed Nickel	1	$42
973-255B	Matte Black	1	$56

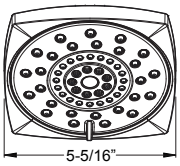

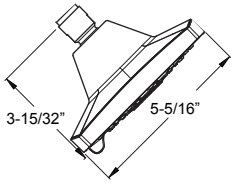

Technical Info

Features:
- 3-Function Showerhead
- Functions:
  - Penetrating Massage
  - Rain Spray
  - Invigorating Spray
- Easy To Clean Spray Nozzles
- Order 941-Ø55 for 1.5 gpm Showerhead Insert
- Showerhead 1.8 gpm @ 80 psi

Northcott™ Showerhead

973-169A	Polished Chrome	1	$41
973-169J	Brushed Nickel	1	$57
973-169Y	Tuscan Bronze	1	$69

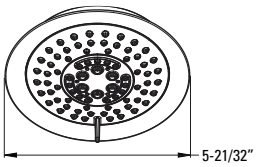

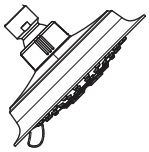

Features:
- Five-Function Sprayhead
- Functions:
  - Penetrating Massage
  - Rain Spray
  - Invigorating Spray
  - Champagne/Raincan Combo
  - Campange Spray)
- Easy To Clean Spray Nozzles
- IP And Quick Connect Diverted Tub Spout
- Order 941-Ø55Ø for 1.5 gpm Showerhead Insert
- Showerhead 1.8 gpm @ 80 psi

Bronson™ Showerhead

973-183A	Polished Chrome	1	$53
973-183J	Brushed Nickel	1	$74
973-183Y	Tuscan Bronze	1	$100

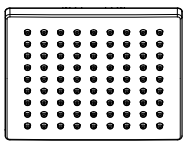

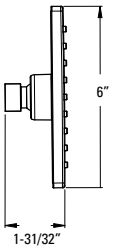

Features:
- Decorative Showerhead
- Easy To Clean Spray Nozzles
- Brass Ball Joint
- Showerhead 1.8 gpm @ 80 psi

CEC Compliant | Cal Green Compliant | Meets EPA WaterSense℠ Standards | NSF Lead-Free Certified | ADA Compliant | UltraSeal™ | SecurePfit™

Saxton™ Showerhead

Model	Finish	Case Qty	List Price
973-257A	Polished Chrome	1	$75
973-257J	Brushed Nickel	1	$195
973-257Y	Tuscan Bronze	1	$231

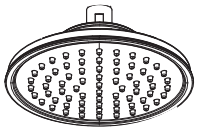

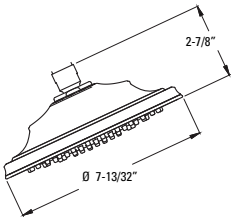

Technical Info

Features:
- Decorative Raincan Showerhead
- Easy To Clean Spray Nozzles
- Order 941-Ø55Ø for 1.5 gpm Showerhead Insert
- Showerhead 1.8 gpm @ 80 psi

Must Order Pressure Balance Rough in Valve Separately. See Valve Section.

Avalon™ Showerhead

973-169A	Polished Chrome	1	$41
973-169J	Brushed Nickel	1	$57
973-169Y	Tuscan Bronze	1	$69

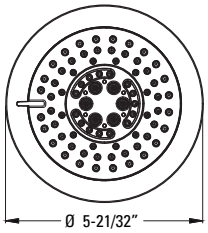

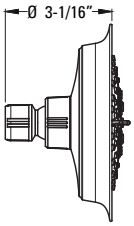

Features:
- Five-Function Showerhead
- Functions:
  - Penetrating Massage
  - Rain Spray
  - Invigorating Spray
  - Champagne/Raincan Combo Spray
  - Champagne Spray
- Order 941-Ø55Ø for 1.5 gpm Showerhead Insert
- Brass Ball Joint
- Showerhead 1.8 gpm @ 80 psi

Arkitek™ Showerhead

973-227A	Polished Chrome	1	$27
973-227J	Brushed Nickel	1	$40

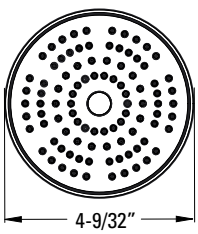

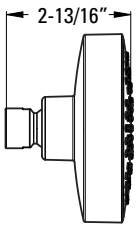

Features:
- Decorative Showerhead
- Easy To Clean Spray Nozzles
- Brass Ball Joint
- Showerhead 1.8 gpm @ 80 psi

CEC Compliant | Cal Green Compliant | Meets EPA WaterSense℠ Standards | NSF Lead-Free Certified | ADA Compliant | UltraSeal™ | SecurePfit™

Bell Showerhead

Model	Finish	Case Qty	List Price
LG15-Ø7ØØ	Polished Chrome	4	$62
LG15-Ø7ØK	Brushed Nickel	4	$115

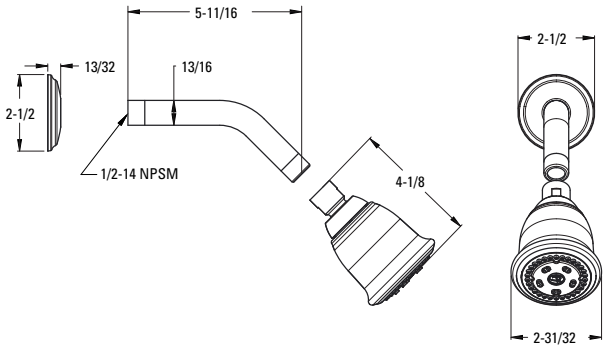

Technical Info

Features:
- Bell Showerhead
- Order 941-Ø55Ø for 1.5 gpm Showerhead Insert
- Brass Ball Joint
- Includes Shower Arm and Flange
- Showerhead 1.8 gpm @ 80 psi

Bell Showerhead

LG15-Ø6ØØ	Polished Chrome	4	$50
LG15-Ø6ØK	Brushed Nickel	4	$62

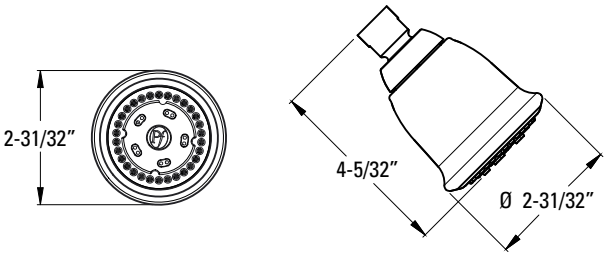

Features:
- Bell Showerhead
- Order 941-Ø55Ø for 1.5 gpm Showerhead Insert
- Brass Ball Joint
- Showerhead 1.8 gpm @ 80 psi

Water Saving Showerhead

Ø15-PCØ1	Polished Chrome	6	$39
Ø15-PKØ1	Brushed Nickel	6	$55

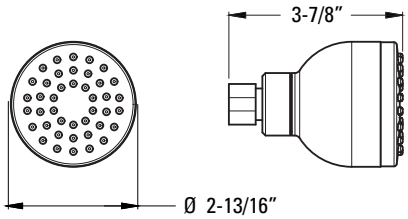

Features:
- Bell Showerhead
- Easy To Clean Spray Nozzles
- Brass Ball Joint
- Showerhead 1.5 gpm @ 80 psi

Showers

CEC Compliant | Cal Green Compliant | Meets EPA WaterSense℠ Standards | NSF Lead-Free Certified | ADA Compliant | UltraSeal™ | SecurePfit™

	Model	Finish	Case Qty	List Price
Transitional Showerhead	973-226A	Polished Chrome	1	$23
	973-226J	Brushed Nickel	1	$32

Technical Info

Features:
- 5-Function Showerhead
- Functions:
  - Penetrating Massage
  - Rain Spray
  - Invigorating Spray
  - Champagne/RainCan Combo Spray
  - Champagne Spray
- Showerhead 1.8 gpm @ 80 psi

5

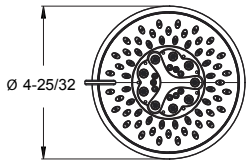

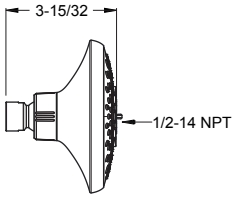

Water Saving Showerhead	Ø15-LCØC	Polished Chrome	24	$22

Features:
- Bell Showerhead
- Easy To Clean Spray Nozzles
- Variable Air Infused Technology
- Showerhead 1.5 gpm @ 80 psi

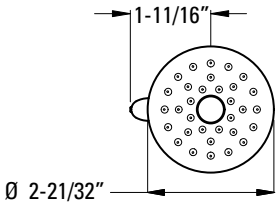

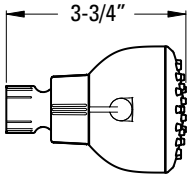

CEC Compliant | Cal Green Compliant | Meets EPA WaterSense℠ Standards | NSF Lead-Free Certified | ADA Compliant | UltraSeal™ | SecurePfit™

SHOWROOM PREFERRED

Rhen™
Slide Bar/Hand Shower Kit

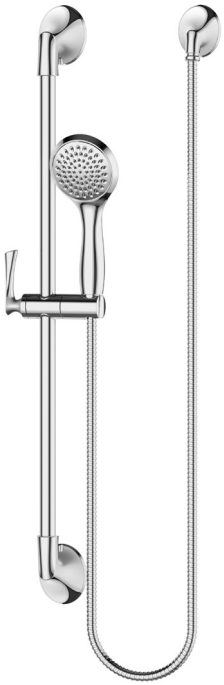

Model	Finish	Case Qty	List Price
LG16-3RHC	Polished Chrome	3	$325
LG16-3RHK	Brushed Nickel	3	$430
LG16-3RHB	Matte Black	3	$502
LG16-3RHBG	Brushed Gold	3	$524

Available Fall 2018

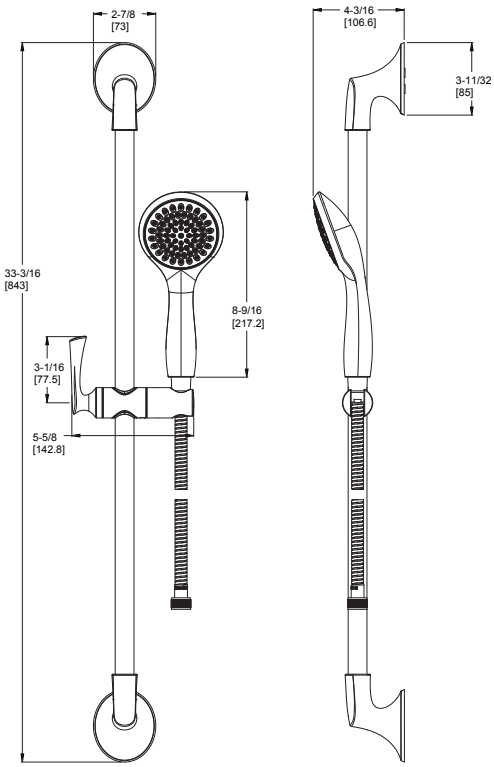

Technical Info

Features:
- Complete Slide Bar Package With Hand Shower, Hose, Drop Elbow, and Slide Bar
- Self Cleaning Hand Held Showerhead
- 60" Metal Hose with Matching Finish
- Back Flow Prevention
- Works with Rhen Diverter Trim and Valve
- Not to be Used as a Grab Bar
- Hand Shower 1.8 gpm @ 60 psi

Showers

CEC Compliant | Cal Green Compliant | Meets EPA WaterSense℠ Standards | NSF Lead-Free Certified | ADA Compliant | UltraSeal™ | SecurePfit™

SHOWROOM PREFERRED

Kenzo™
Slide Bar/Hand Shower Kit

Model	Finish	Case Qty	List Price
LG16-3DFC	Polished Chrome	3	$319
LG16-3DFK	Brushed Nickel	3	$425
LG16-3DFB	Matte Black	3	$495

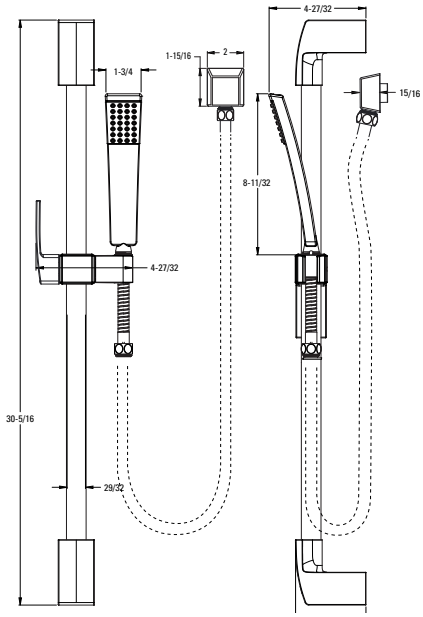

Technical Info

Features:
- Complete Slide Bar Package with Hand Shower, Hose, Drop Elbow, and Slide Bar
- Wall Mount Bracket and Drop Elbow
- Easy To Clean Spray Nozzles
- 60" Metal Hose with Matching Finish
- Back Flow Prevention
- Works with Kenzo Diverter Trim and Valve
- Not to be Used as a Grab Bar
- Hand Shower 1.8 gpm @ 80 psi

SHOWROOM PREFERRED

Arterra™
Slide Bar/Hand Shower Kit

LG16-3DEC	Polished Chrome	3	$306
LG16-3DEK	Brushed Nickel	3	$409
LG16-3DED	Polished Nickel	3	$409
LG16-3DEY	Tuscan Bronze	3	$482

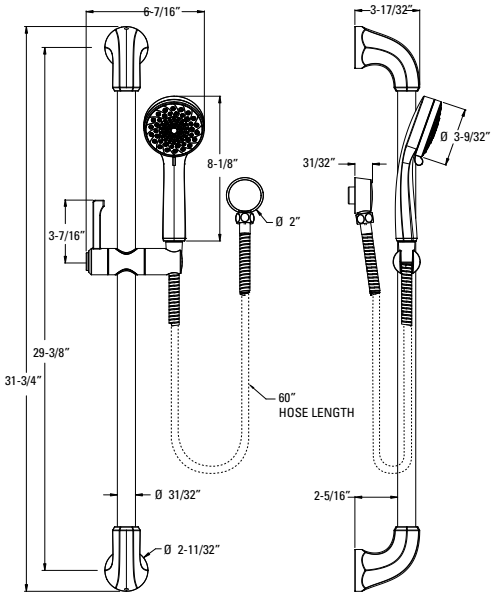

Features:
- Complete Slide Bar Package with Hand Shower, Hose, Drop Elbow, and Slide Bar
- 3 Function Hand Shower
- Functions:
  - Penetrating Massage
  - Rain Spray
  - Invigorating Spray
- Easy To Clean Spray Nozzles
- 60" Metal Hose with Matching Finish
- All Metal Slide Bar
- Metal Hose with Matching Finish
- Back Flow Prevention
- Works with Arterra Diverter Trim and Valve
- Not to be Used as a Grab Bar
- Hand Shower 1.8 gpm @ 80 psi

CEC Compliant | Cal Green Compliant | Meets EPA WaterSense℠ Standards | NSF Lead-Free Certified | ADA Compliant | UltraSeal™ | SecurePfit™

SHOWROOM PREFERRED

Slide Bar Package

Model	Finish	Case Qty	List Price
LG16-3ØØC	Polished Chrome	6	$206
LG16-3ØØK	Brushed Nickel	6	$351
LG16-3ØØY	Tuscan Bronze	6	$445
LG16-3ØØU	Rustic Bronze	6	$517

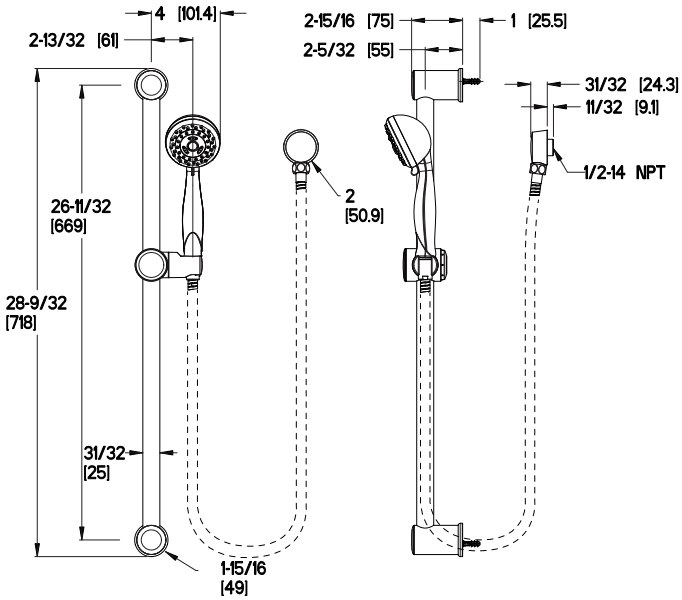

Technical Info

Features:
- Complete Slide Bar Package with Hand Shower, Hose, Drop Elbow, and Slide Bar
- Metal Slide Bar
- Matching Finish Metal Hose
- Easy To Clean Spray Nozzles
- 60" Metal Hose with Matching Finish
- Functions: Penetrating Massage, Rain Spray and Invigorating Spray
- Push Mechanism for Height Adjustment
- Not to be Used as a Grab Bar
- Hand Shower 1.8 gpm @ 80 psi

SHOWROOM PREFERRED

Kenzo™ Hand Shower Kit

LG16-1DFC	Polished Chrome	3	$186
LG16-1DFK	Brushed Nickel	3	$298
LG16-1DFB	Matte Black	3	$304

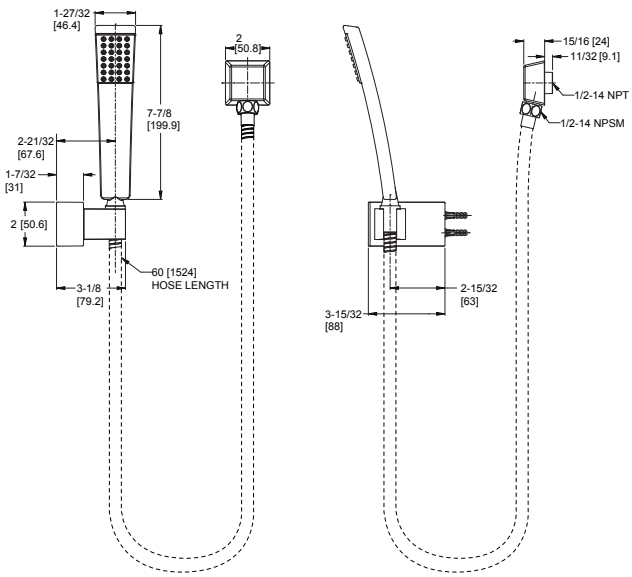

Features:
- Hand Shower, Wall Mount Bracket and Drop Elbow
- Easy To Clean Spray Nozzles
- 60" Metal Hose with Matching Finish
- Metal Hose with Matching Finish
- Back Flow Prevention
- Hand Shower 1.8 gpm @ 80 psi

Showers

CEC Compliant | Cal Green Compliant | Meets EPA WaterSense℠ Standards | NSF Lead-Free Certified | ADA Compliant | UltraSeal™ | SecurePfit™

SHOWROOM PREFERRED

Wall Mount Package

LG16-2ØØC	Polished Chrome	3	$144
LG16-2ØØK	Brushed Nickel	3	$258
LG16-2ØØY	Tuscan Bronze	3	$300
LG16-2ØØU	Rustic Bronze	3	$382

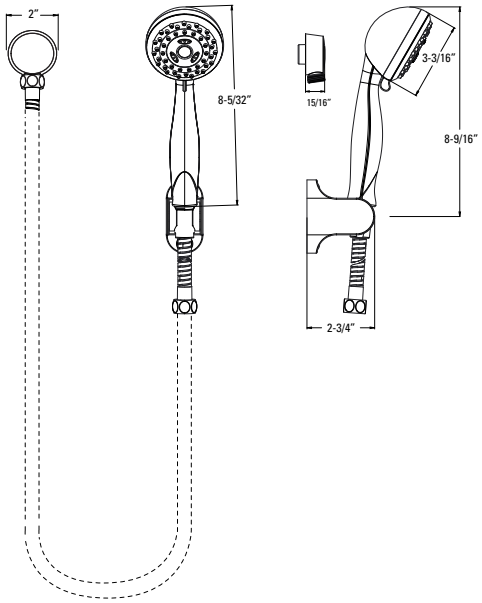

Features:
- Three-Function Hand Shower with Dual Check Valves
- Functions:
  - Penetrating Massage
  - Rain Spray
  - Invigorating Spray
- Matching Finish Metal Hose
- Easy To Clean Spray Nozzles
- 60" Metal Hose with Matching Finish
- Hand Shower, Hose, Wall Mount Bracket, and Drop Elbow
- Order 941-Ø55Ø for 1.5 gpm Separately
- Hand Shower 1.8 gpm @ 80 psi

Showers

SHOWROOM PREFERRED

Hand Shower Package

LG16-4ØØC	Polished Chrome	4	$103
LG16-4ØØK	Brushed Nickel	4	$155
LG16-4ØØY	Tuscan Bronze	4	$258
LG16-4ØØU	Rustic Bronze	4	$272

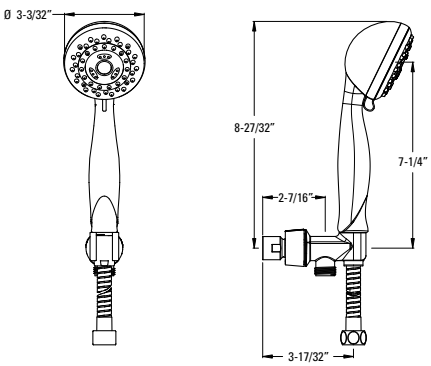

Features:
- Three-Function Hand Shower
- Functions:
  - Penetrating Massage
  - Rain Spray
  - Invigorating Spray
- Easy To Clean Spray Nozzles
- Metal Hose and Shower Arm Mount
- Dual Check Valve for Back Flow Prevention
- Hand Shower 1.8 gpm @ 80 psi

CEC Compliant | Cal Green Compliant | Meets EPA WaterSense℠ Standards | NSF Lead-Free Certified | ADA Compliant | UltraSeal™ | SecurePfit™

SHOWROOM PREFERRED

Universal Hand Shower

Model	Finish	Case Qty	List Price
LG16-19ØC	Polished Chrome	6	$50
LG16-19ØK	Brushed Nickel	6	$68
LG16-19ØY	Tuscan Bronze	6	$90
LG16-19ØU	Rustic Bronze	6	$100

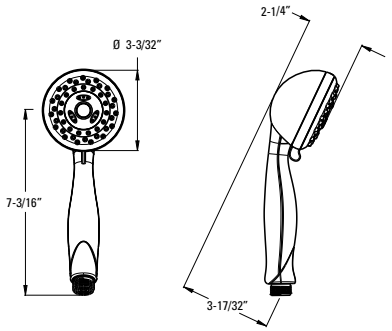

Technical Info

Features:
- Three-Function Hand Shower
- Functions:
  - Penetrating Massage
  - Rain Spray
  - Invigorating Spray
- Easy To Clean Spray Nozzles
- Dual Check Valve for Back Flow Prevention
- Order 941-Ø55Ø 1.5 gpm Separately
- Hand Shower 1.8 gpm @ 80 psi

Avalon™ Hand Shower Package

LG16-CBØC	Polished Chrome	4	$84
LG16-CBØK	Brushed Nickel	4	$117
LG16-CBØY	Tuscan Bronze	4	$137

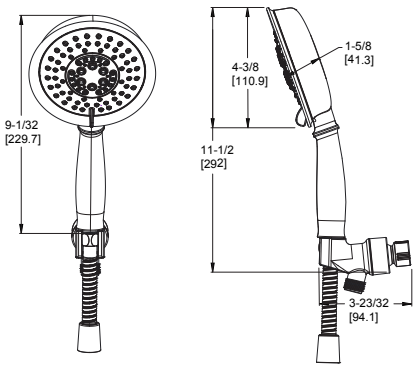

Features:
- Three-Function Hand Shower with Dual Check Valves
- Functions:
  - Penetrating Massage
  - Rain Spray
  - Invigorating Spray
- Easy To Clean Spray Nozzles
- 60" Metal Hose with Matching Finish
- Mylar Hose and Shower Arm Mount
- Order 941-Ø55Ø 1.5 gpm Separately
- Hand Shower 1.8 gpm @ 80 psi

SHOWROOM PREFERRED

6" Ceiling Shower Arm

Ø15-Ø6CC	Polished Chrome	3	$46
Ø15-Ø6CK	Brushed Nickel	3	$68
Ø15-Ø6CU	Rustic Bronze	3	$101

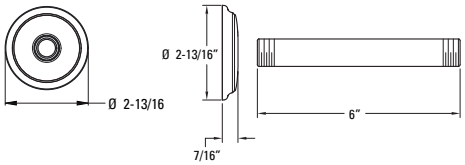

Features:
- Ceiling Mount Shower Arm and Flange
- Matching Finish
- Brass Shower Arm
- 1/2" NPT Male Connections

SHOWROOM PREFERRED

12" Ceiling Shower Arm

Ø15-12CC	Polished Chrome	3	$56
Ø15-12CK	Brushed Nickel	3	$79
Ø15-12CY	Tuscan Bronze	3	$101
Ø15-12CU	Rustic Bronze	3	$112

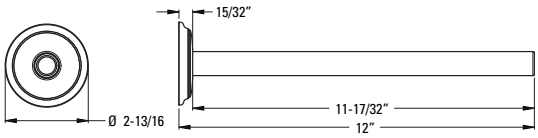

Features:
- Ceiling Mount Shower Arm and Flange
- Matching Finish
- Brass Shower Arm
- 1/2" NPT Male Connections

Ashfield™ Arcing Shower Arm

973-5Ø5A	Polished Chrome	1	$128
973-5Ø5J	Brushed Nickel	1	$143
973-5Ø5Y	Tuscan Bronze	1	$122
973-5Ø5U	Rustic Bronze	1	$169

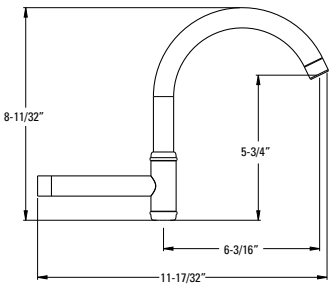

Features:
- Brass Shower Arm
- 1/2" NPT Male Connections

Marielle™ Standard Shower Arm

973-ØØ9A	Polished Chrome	1	$31
973-ØØ9J	Brushed Nickel	1	$41
973-ØØ9D	Polished Nickel	1	$41
973-ØØ9Y	Tuscan Bronze	1	$44

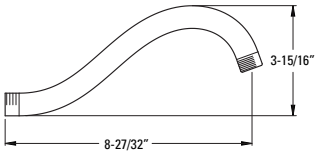

Features:
- Brass Shower Arm
- 1/2" NPT Male Connections

Marielle™ Extended Length Shower Arm

Model	Finish	Case Qty	List Price
973-Ø19A	Polished Chrome	1	$45
973-Ø19J	Brushed Nickel	1	$45
973-Ø19D	Polished Nickel	1	$45
973-Ø19Y	Tuscan Bronze	1	$62

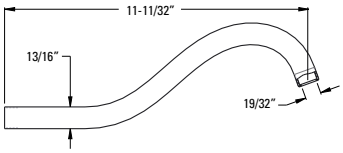

Technical Info

Features:
- 11 11/32' Length
- Brass Shower Arm
- 1/2" NPT Male Connections

S-Curve Shower Arm

Model	Finish	Case Qty	List Price
973-Ø33A	Polished Chrome	1	$82
973-Ø33J	Brushed Nickel	1	$90
973-Ø33Y	Tuscan Bronze	1	$104

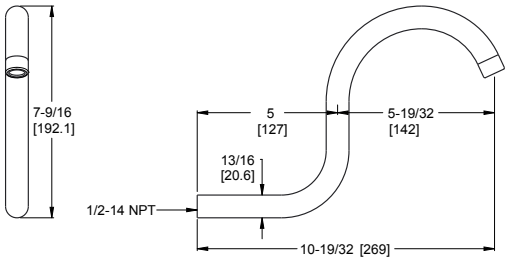

Features:
- Brass Shower Arm
- 1/2" NPT Male Connections

Straight Shower Arm

Model	Finish	Case Qty	List Price
973-1Ø3A	Polished Chrome	1	$66
973-1Ø3J	Brushed Nickel	1	$80
973-1Ø3D	Polished Nickel	1	$86
973-1Ø3Y	Tuscan Bronze	1	$100
973-1Ø3BG	Brushed Gold	1	$115

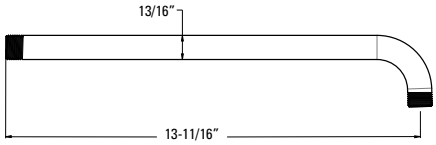

Features:
- 13 11/16" Length
- Brass Shower Arm
- 1/2" NPT Male Connections

Curved Shower Arm

Model	Finish	Case Qty	List Price
973-Ø3ØA	Polished Chrome	1	$14
973-Ø3ØJ	Brushed Nickel	1	$15
973-Ø3ØD	Polished Nickel	1	$26
973-Ø3ØB	Matte Black	1	$15
973-Ø3ØY	Tuscan Bronze	1	$31
973-Ø3ØU	Rustic Bronze	1	$29
973-Ø3ØBG	Brushed Gold	1	$24

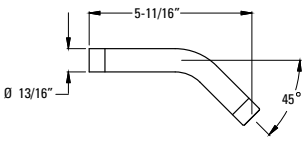

Features:
- 5 11/16' Length
- Brass Shower Arm
- 1/2" NPT Male Connections

Rhen™ Shower Arm Flange

96Ø-343A	Polished Chrome	1	$14
96Ø-343J	Brushed Nickel	1	$18
96Ø-343B	Matte Black	1	$16
96Ø-343BG	Brushed Gold	1	$20

Available Fall 2018

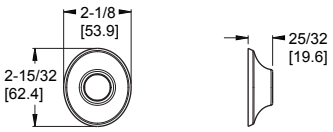

Features:
- All Metal
- Matches Kenzo Style & Finishes

Kenzo™ Shower Arm Flange

96Ø-Ø97A	Polished Chrome	1	$14
96Ø-Ø97J	Brushed Nickel	1	$18
96Ø-Ø97B	Matte Black	1	$16

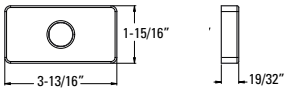

Features:
- All Metal
- Matches Kenzo Style & Finishes

Ashfield™ Shower Arm Flange

94Ø-525A	Polished Chrome	1	$11
94Ø-525J	Brushed Nickel	1	$13
94Ø-525Y	Tuscan Bronze	1	$17
94Ø-525U	Rustic Bronze	1	$16

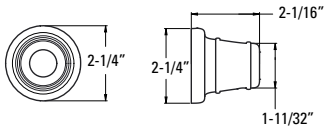

Features:
- All Metal
- Matches Style & Finishes

Arterra™ Shower Arm Flange

96Ø-274A	Polished Chrome	1	$11
96Ø-274J	Brushed Nickel	1	$13
96Ø-274D	Polished Nickel	1	$13
96Ø-274Y	Tuscan Bronze	1	$15

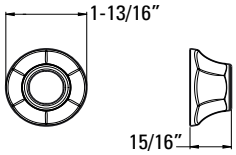

Features:
- All Metal
- Matches Arterra Style & Finishes

Marielle® & Avalon™ Shower Arm Flange

96Ø-Ø39A	Polished Chrome	1	$7
96Ø-Ø39J	Brushed Nickel	1	$9
96Ø-Ø39D	Polished Nickel	1	$9
96Ø-Ø39Y	Tuscan Bronze	1	$8

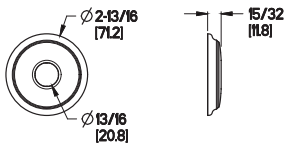

Features:
- All Metal
- Matches Marielle and Avalon Style & Finishes

	Model	Finish	Case Qty	List Price	Technical Info
Contempra® Shower Arm Flange	96Ø-258A	Polished Chrome	1	$8	**Features:** • All Metal • Matches Contempra Style & Finishes
	96Ø-258J	Brushed Nickel	1	$12	
	96Ø-258B	Matte Black	1	$14	
	96Ø-258BG	Brushed Gold	1	$16	

*MB Coming Fall 2018

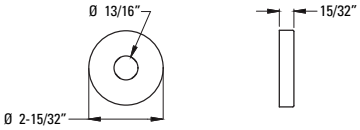

Deckard™ Shower Arm Flange	96Ø-331A	Polished Chrome	1	$6	**Features:** • All Metal • Matches Kenzo Style & Finishes
	96Ø-331J	Brushed Nickel	1	$7	
	96Ø-331B	Matte Black	1	$8	

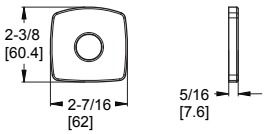

Arkitek™ Shower Arm Flange	96Ø-282A	Polished Chrome	1	$11	**Features:** • All Metal • Matches Style & Finishes
	96Ø-282J	Brushed Nickel	1	$15	

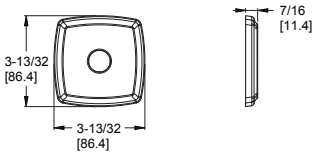

Pfirst Modern™ Shower Arm Flange	96Ø-323A	Polished Chrome	1	$3	**Features:** • All Metal • Matches Arterra Style & Finishes
	96Ø-323J	Brushed Nickel	1	$5	

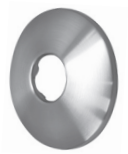

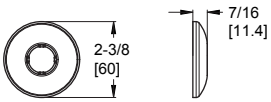

Standard Shower Arm Flange	96Ø-Ø63A	Polished Chrome	1	$3	**Features:** • All Metal
	96Ø-Ø63J	Brushed Nickel	1	$6	
	96Ø-Ø63Y	Tuscan Bronze	1	$8	

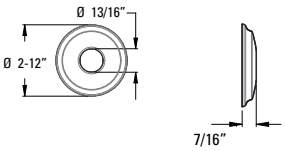

SHOWROOM PREFERRED

Metal Hose

Model	Finish	Case Qty	List Price
Ø16-18ØC	Polished Chrome	6	$40
Ø16-18ØK	Brushed Nickel	6	$95
Ø16-18OD	Polished Nickel	6	$95
Ø16-18ØB	Matte Black	6	$137
Ø16-18ØY	Tuscan Bronze	6	$128
Ø16-18ØBG	Brushed Gold	6	$72

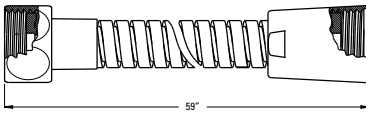

Technical Info

Features:
- Anti-Twist Metal Hose
- Matching Finish Metal Hose

SHOWROOM PREFERRED

Rhen™ Oval Drop Elbow

96Ø-344A	Polished Chrome	1	$34
96Ø-344J	Brushed Nickel	1	$52
96Ø-344B	Matte Black	1	$73
96Ø-344BG	Brushed Gold	1	$61

Available Fall 2018

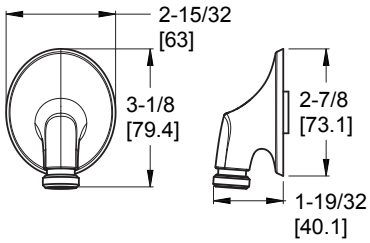

Features:
- 1/2" IP Connection
- Matching Finish

SHOWROOM PREFERRED

Circle Drop Elbow

Ø16-17ØC	Polished Chrome	8	$34
Ø16-17ØK	Brushed Nickel	8	$52
Ø16-17ØD	Polished Nickel	8	$50
Ø16-17ØB	Matte Black	8	$73
Ø16-17ØY	Tuscan Bronze	8	$66

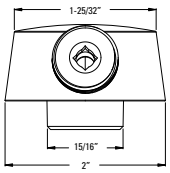

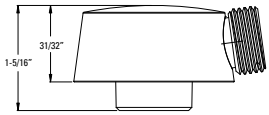

Features:
- IP Connection
- Matching Finish

SHOWROOM PREFERRED

Square Drop Elbow

Model	Finish	Case Qty	List Price
Ø16-17FC	Polished Chrome	8	$32
Ø16-17FK	Brushed Nickel	8	$50
Ø16-17FD	Polished Nickel	8	$50
Ø16-17FB	Matte Black	8	$70
Ø16-17FY	Tuscan Bronze	8	$63
Ø16-17FBG	Brushed Gold	8	$58

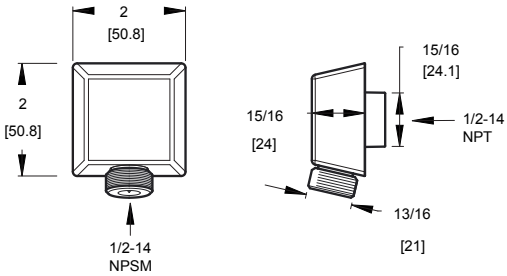

Technical Info

Features:
- 1/2" IP Connection
- Matching Finish

Wall Mount

Model	Finish	Case Qty	List Price
Ø16-15ØC	Polished Chrome	8	$35
Ø16-15ØK	Brushed Nickel	8	$57
Ø16-15ØY	Tuscan Bronze	8	$75

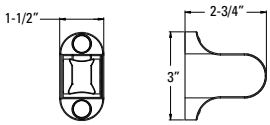

Features:
- Adjustable Wall Mount
- Matching Finish

SHOWROOM PREFERRED

Rhen™
Diverter Trim

Model	Finish	Case Qty	List Price
Ø16-1RHC	Polished Chrome	3	$105
Ø16-RH1K	Brushed Nickel	3	$145
Ø16-RH1B	Matte Black	3	$162
Ø16-1RHBG	Brushed Gold	3	$175

Available Fall 2018

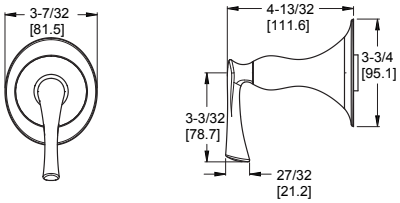

Technical Info

Features:
- SecurePfit™
- Metal Lever Handle and Matching Flange
- Can Be Used with Ø15-2WDX for Cal Green Compliant Applications

Must Order Ø15-4WDX or Ø15-2WDX Rough In Valve Separately

SHOWROOM PREFERRED

Kenzo™
Diverter Trim

Ø16-DFØC	Polished Chrome	3	$102
Ø16-DFØK	Brushed Nickel	3	$141
Ø16-DFØB	Matte Black	3	$144

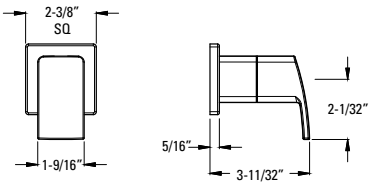

Features:
- SecurePfit™
- Metal Lever Handle and Matching Flange
- Can Be Used with Ø15-2WDX for Cal Green Compliant Applications

Must Order Ø15-4WDX or Ø15-2WDX Rough In Valve Separately

SHOWROOM PREFERRED

Ashfield™
Diverter Trim

Ø16-YPØC	Polished Chrome	3	$87
Ø16-YPØK	Brushed Nickel	3	$126
Ø16-YPØY	Tuscan Bronze	3	$186
Ø16-YPØU	Rustic Bronze	3	$193

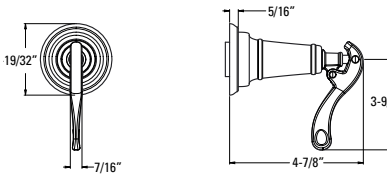

Features:
- SecurePfit™
- Metal Lever Handle and Matching Flange
- Can Be Used with Ø15-2WDX for Cal Green Compliant Applications

Must Order Ø15-4WDX or Ø15-2WDX Rough In Valve Separately

SHOWROOM PREFERRED

Arterra™
Diverter Trim

Ø16-DE1C	Polished Chrome	3	$106
Ø16-DE1K	Brushed Nickel	3	$125
Ø16-DE1D	Polished Nickel	3	$125
Ø16-DE1Y	Tuscan Bronze	3	$145

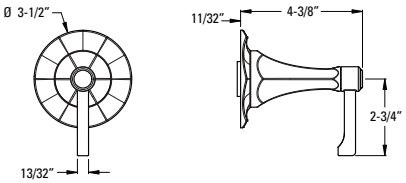

Features:
- SecurePfit™
- Metal Lever Handle and Matching Flange
- Can Be Used with Ø15-2WDX for Cal Green Compliant Applications

Must Order Ø15-4WDX or Ø15-2WDX Rough In Valve Separately

CEC Compliant | Cal Green Compliant | Meets EPA WaterSense℠ Standards | NSF Lead-Free Certified | ADA Compliant | UltraSeal™ | SecurePfit™

SHOWROOM PREFERRED

Marielle®
Diverter Trim

Model	Finish	Case Qty	List Price
Ø16-MBØC	Polished Chrome	3	$86
Ø16-MBØK	Brushed Nickel	3	$121
Ø16-MBØD	Polished Nickel	3	$121
Ø16-MBØY	Tuscan Bronze	3	$180

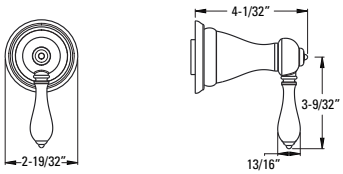

Technical Info

Features:
- SecurePfit™
- Metal Lever Handle and Matching Flange
- Can Be Used with Ø15-2WDX for Cal Green Compliant Applications

Must Order Ø15-4WDX or Ø15-2WDX Rough In Valve Separately

SHOWROOM PREFERRED

Contempra®
Diverter Trim

Ø16-NC1C	Polished Chrome	3	$81
Ø16-NC1K	Brushed Nickel	3	$106
Ø16-NC1B	Matte Black	3	$122
Ø16-NC1BG	Brushed Gold	3	$147

Matte Black Coming Fall 2018

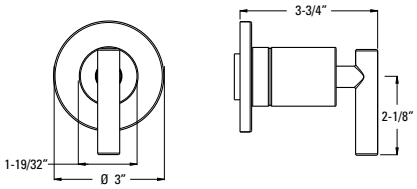

Features:
- SecurePfit™
- Metal Lever Handle and Matching Flange
- Can Be Used with Ø15-2WDX for Cal Green Compliant Applications

Must Order Ø15-4WDX or Ø15-2WDX Rough In Valve Separately

Deckard™
Diverter Trim

Ø16-DAØC	Polished Chrome	3	$73
Ø16-DAØK	Brushed Nickel	3	$88
Ø16-DAØB	Matte Black	3	$125

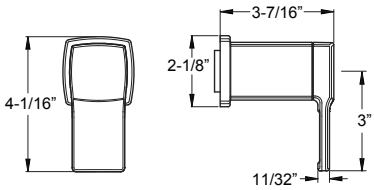

Features:
- SecurePfit™
- Metal Lever Handle and Matching Flange
- Can Be Used with Ø15-2WDX for Cal Green Compliant Applications

Must Order Ø15-4WDX or Ø15-2WDX Rough In Valve Separately

Northcott™
Diverter Trim

Ø16-MGØC	Polished Chrome	3	$73
Ø16-MGØK	Brushed Nickel	3	$88
Ø16-MGØY	Tuscan Bronze	3	$125

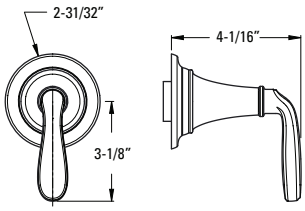

Features:
- SecurePfit™
- Metal Lever Handle and Matching Flange
- Can Be Used with Ø15-2WDX for Cal Green Compliant Applications

Must Order Ø15-4WDX or Ø15-2WDX Rough In Valve Separately

CEC Compliant | Cal Green Compliant | Meets EPA WaterSense℠ Standards | NSF Lead-Free Certified | ADA Compliant | UltraSeal™ | SecurePfit™

Bronson™
Diverter Trim

Model	Finish	Case Qty	List Price
Ø16-BSØC	Polished Chrome	3	$73
Ø16-BSØK	Brushed Nickel	3	$88
Ø16-BSØY	Tuscan Bronze	3	$125

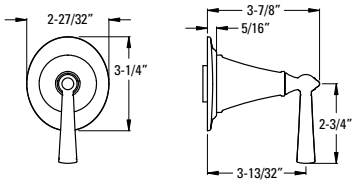

Technical Info

Features:
- SecurePfit™
- Metal Lever Handle and Matching Flange
- Can Be Used with Ø15-2WDX for Cal Green Compliant Applications

Must Order Ø15-4WDX or Ø15-2WDX Rough In Valve Separately

Saxton™
Diverter Trim

Ø16-GLØC	Polished Chrome	3	$56
Ø16-GLØK	Brushed Nickel	3	$78
Ø16-GLØY	Tuscan Bronze	3	$104

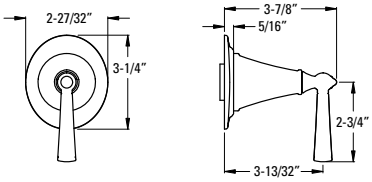

Features:
- SecurePfit™
- Metal Lever Handle and Matching Flange
- Can Be Used with Ø15-2WDX for Cal Green Compliant Applications

Must Order Ø15-4WDX or Ø15-2WDX Rough In Valve Separately

Avalon™
Diverter Trim

Ø16-CB1C	Polished Chrome	3	$62
Ø16-CB1K	Brushed Nickel	3	$86
Ø16-CB1Y	Tuscan Bronze	3	$115

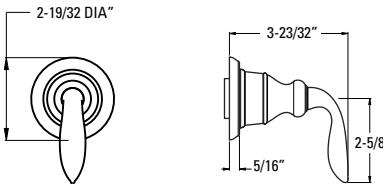

Features:
- SecurePfit™
- Metal Lever Handle and Matching Flange
- Can Be Used with Ø15-2WDX for Cal Green Compliant Applications

Must Order Ø15-4WDX or Ø15-2WDX Rough In Valve Separately

Serrano™
Diverter Trim

Ø16-SRØC	Polished Chrome	3	$58
Ø16-SRØK	Brushed Nickel	3	$80
Ø16-SRØY	Tuscan Bronze	3	$107

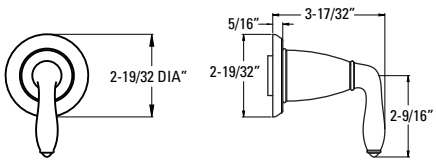

Features:
- SecurePfit™
- Metal Lever Handle and Matching Flange
- Can Be Used with Ø15-2WDX for Cal Green Compliant Applications

Must Order O15-4WDX or Ø15-2WDX Rough In Valve Separately

CEC Compliant | Cal Green Compliant | Meets EPA WaterSense℠ Standards | NSF Lead-Free Certified | ADA Compliant | UltraSeal™ | SecurePfit™

Rhen™ Tub Spout

Model	Finish	Case Qty	List Price
92Ø-2Ø9A	Polished Chrome	1	$81
92Ø-2Ø9J	Brushed Nickel	1	$92
92Ø-2Ø9B	Matte Black	1	$97
92Ø-2Ø9BG	Brushed Gold	1	$112

Available Fall 2018

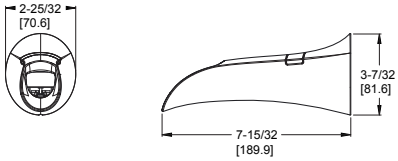

Technical Info

Features:
- All Metal
- IP & Integrated Diverted Spout
- Integrated Diverter Pop Up

Kenzo™ Tub Spout

92Ø-623A	Polished Chrome	1	$81
92Ø-623J	Brushed Nickel	1	$92
92Ø-623B	Matte Black	1	$97

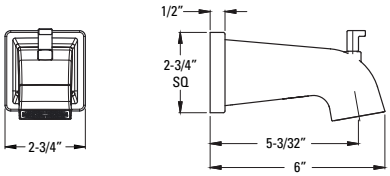

Features:
- All Metal
- IP & Quick Connect Diverted Spout

Ashfield™ Tub Spout

92Ø-524A	Polished Chrome	1	$56
92Ø-524J	Brushed Nickel	1	$70
92Ø-524Y	Tuscan Bronze	1	$75
92Ø-524U	Rustic Bronze	1	$ 7 1

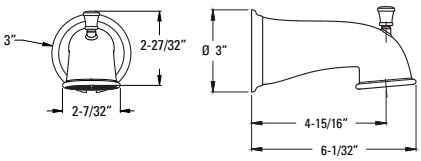

Features:
- All Metal
- IP Threaded Diverted Spout

Arterra™ Tub Spout

92Ø-146A	Polished Chrome	1	$118
92Ø-146J	Brushed Nickel	1	$135
92Ø-146D	Polished Nickel	1	$135
92Ø-146Y	Tuscan Bronze	1	$144

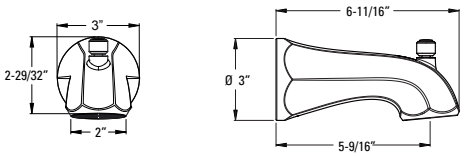

Features:
- All Metal
- IP & Quick Connect Diverted Spout

Marielle® Tub Spout

92Ø-Ø21A	Polished Chrome	1	$84
92Ø-Ø21J	Brushed Nickel	1	$96
92Ø-Ø21D	Polished Nickel	1	$96
92Ø-Ø21Y	Tuscan Bronze	1	$105

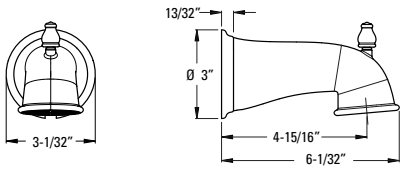

Features:
- All Metal
- IP Threaded Diverted Spout

Contempra® Tub Spout

Model	Finish	Case Qty	List Price
92Ø-136A	Polished Chrome	1	$69
92Ø-136J	Brushed Nickel	1	$86
92Ø-136B	Matte Black	1	$76
92Ø-136BG	Brushed Gold	1	$81

*MB Coming Fall 2018

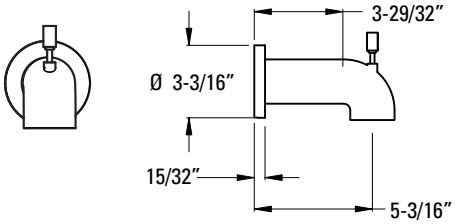

Features:
- All Metal
- IP Threaded Diverted Spout

Deckard™ Tub Spout

92Ø-2Ø8A	Polished Chrome	1	$70
92Ø-2Ø8J	Brushed Nickel	1	$92
92Ø-2Ø8B	Tuscan Bronze	1	$85

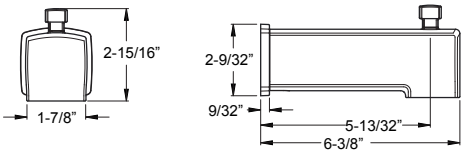

Features:
- All Metal
- IP & Quick Connect Diverted Spout

Northcott™ Tub Spout

92Ø-176A	Polished Chrome	1	$117
92Ø-176J	Brushed Nickel	1	$132
92Ø-176Y	Tuscan Bronze	1	$141

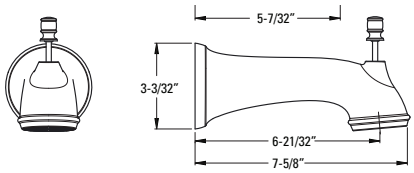

Features:
- All Metal
- IP & Quick Connect Diverted Spout

Bronson® Tub Spout

92Ø-Ø66A	Polished Chrome	1	$65
92Ø-Ø66J	Brushed Nickel	1	$80
92Ø-Ø66Y	Tuscan Bronze	1	$93

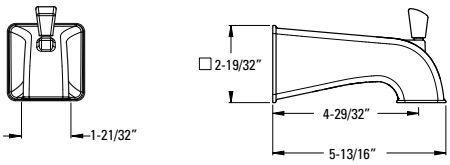

Features:
- All Metal
- IP & Quick Connect Diverted Spout

Avalon™ Tub Spout

Model	Finish	Case Qty	List Price
92Ø-523A	Polished Chrome	1	$69
92Ø-523J	Brushed Nickel	1	$86
92Ø-523Y	Tuscan Bronze	1	$81

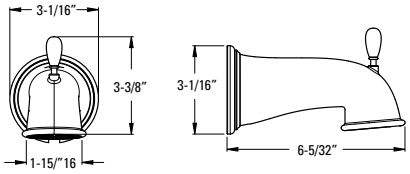

Technical Info

Features:
- All Metal
- IP & Quick Connect Diverted Spout

Weller™ Tub Spout

92Ø-186A	Polished Chrome	1	$62
92Ø-186J	Brushed Nickel	1	$80
92Ø-186Y	Tuscan Bronze	1	$91

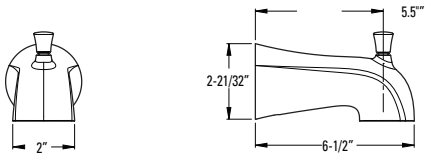

Features:
- All Metal
- IP & Quick Connect Diverted Spout

Standard Tub Spout

Ø15-15ØA	Polished Chrome	3	$24

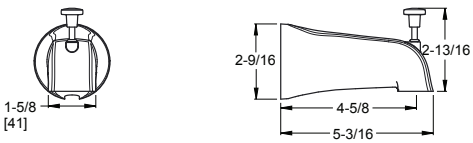

Features:
- All Metal
- Quick Connect Diverted Spout

Standard Tub Spout

Ø15-25ØA	Polished Chrome	3	$35
Ø15-25ØK	Brushed Nickel	3	$68

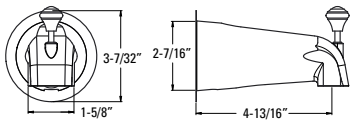

Features:
- All Metal
- IP Threaded Diverted Spout

Showers

Non-Diverted Tub Spout

Model	Finish	Case Qty	List Price
92Ø-911A	Polished Chrome	1	$95
92Ø-911J	Brushed Nickel	1	$82
92Ø-911Y	Tuscan Bronze	1	$104
92Ø-911U	Rustic Bronze	1	$97

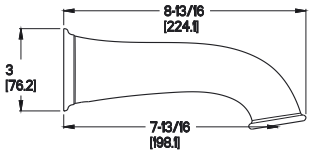

Technical Info

Features:
- All Metal
- Quick Connect Non-Diverted Spout

Diverter Valve and Trim Kit

Ø15-38BC	Polished Chrome	4	$99
Ø15-38BK	Brushed Nickel	4	$209

Features:
- Complete Valve and Trim
- Lever Handle, Sleeve and Flange
- 4-Port, 2-Way Diverter
- 1/2" IP Female Threaded Inlets and Outlets
- Does Not Support Shared Functionality
- Supports Showerhead and/or Hand Shower

SHOWROOM PREFERRED

Roman Tub Hand Held Shower Kit

LG15-4Ø7C	Polished Chrome	4	$294
LG15-4Ø7K	Brushed Nickel	4	$373
LG15-4Ø7Y	Tuscan Bronze	4	$453
LG15-4Ø7U	Rustic Bronze	4	$437

Hand Shower 1.8 gpm @ 80 psi

Features:
- Complete Valve, Trim and Hand Shower
- 1/2" 2-Way Connection: IP or Direct Sweat
- Flexible Supply Needed for IP Connection

Diverter Cartridge

974-8ØØØ	N/A	1	$105

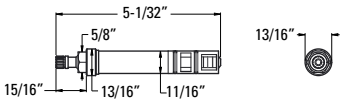

Features:
- Converts Push-Pull Diverter to Twist-Turn
- For Use with Ø15-38B* Diverter Only

Chain & Stopper Type Waste & Overflow

Ø17-Ø1ØØ	Polished Chrome	1	$73

Features:
- Chain & Stopper
- 1 3/8" 22 Gauge

CEC Compliant | Cal Green Compliant | Meets EPA WaterSense℠ Standards | NSF Lead-Free Certified | ADA Compliant | UltraSeal™ | SecurePfit™

	Model	Finish	Case Qty	List Price
Turnstop Type Waste & Overflow	Ø18-31ØC	Polished Chrome	3	$131
	Ø18-31ØK	Brushed Nickel	3	$153
	Ø18-31ØY	Tuscan Bronze	3	$174

Technical Info

Features:
- Turnstop
- 1 1/2" 20 Gauge

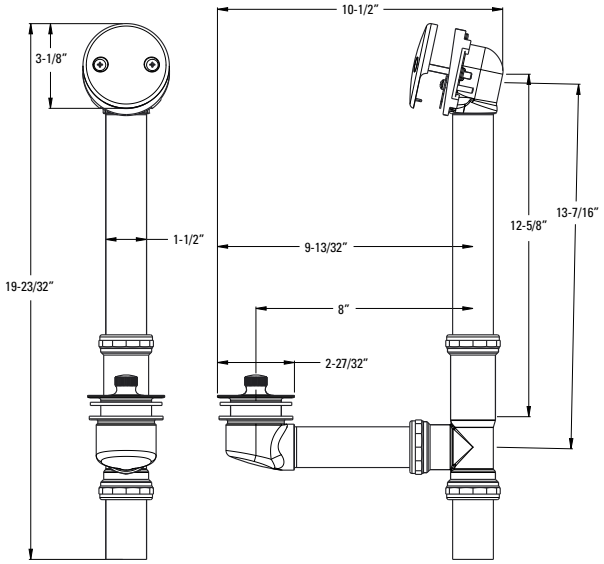

Trip Lever Type Waste & Overflow	Ø19-Ø2ØØ	Polished Chrome	12	$85

Features:
- Trip Lever
- 1 1/2" 20 Gauge

Trip Lever Type Waste & Overflow	Ø19-11ØØ	Polished Chrome	12	$93

Features:
- Trip Lever
- 1 1/2" 17 Gauge with Brass Nuts

CEC Compliant | Cal Green Compliant | Meets EPA WaterSense℠ Standards | NSF Lead-Free Certified | ADA Compliant | UltraSeal™ | SecurePfit™

	Model	Finish	Case Qty	List Price	Technical Info
Trip Lever Type Waste & Overflow	Ø19-112Ø	Polished Chrome	1	$95	**Features:** • Trip Lever • 1 1/2" 17 Gauge with Brass Nuts • Cast Iron Tub Applications

Extension Kit For Deep Tubs & Spas	Ø19-17ØK	N/A	1	$21	**Features:** • Extension kit for 19 Series Waste and Overflow

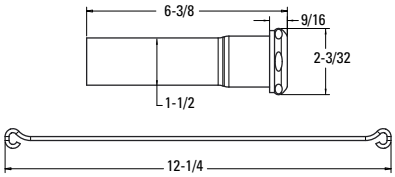

Trip Lever Type Waste & Overflow	Ø19-21ØØ	Polished Chrome	12	$57	**Features:** • Strainer • 1 1/2" 20 Gauge • Metal Face Plate • Accepts Schedule 40 Solvent Weld Tailpiece

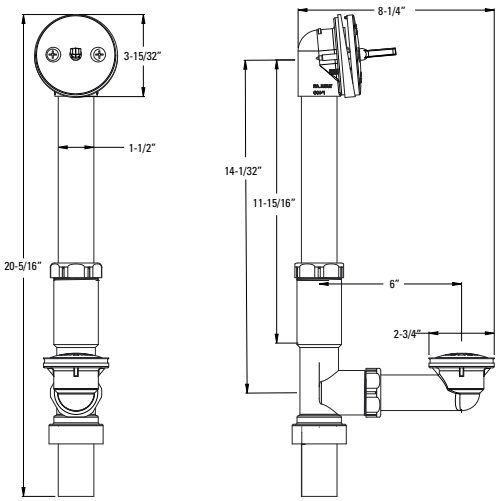

19 Series Extension Kit	Ø19-AKØØ	N/A	1	$20	**Features:** • ABS Extension Kit for 19-21Ø* Waste and Overflow

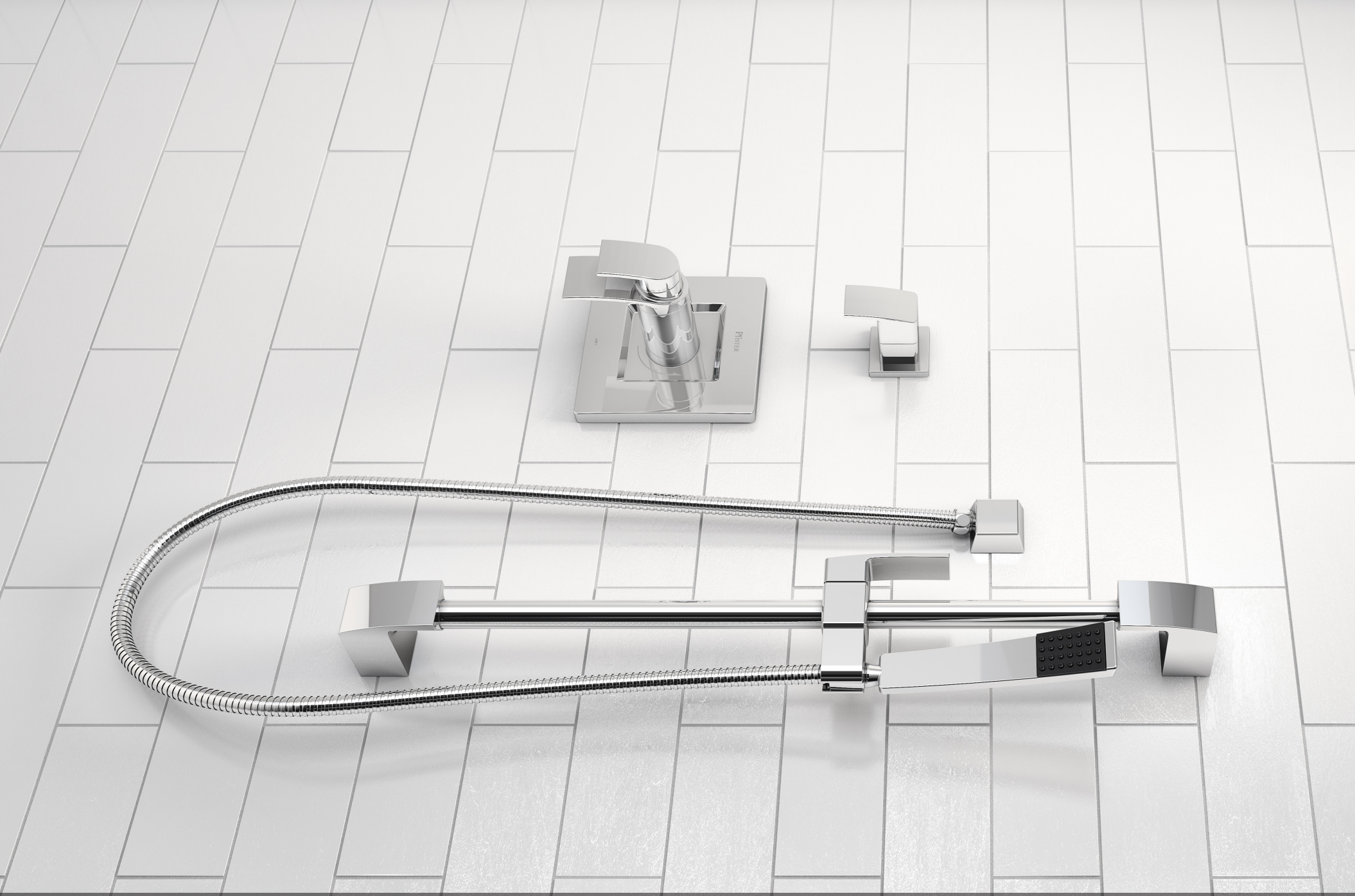

1/2” THERMOSTATIC

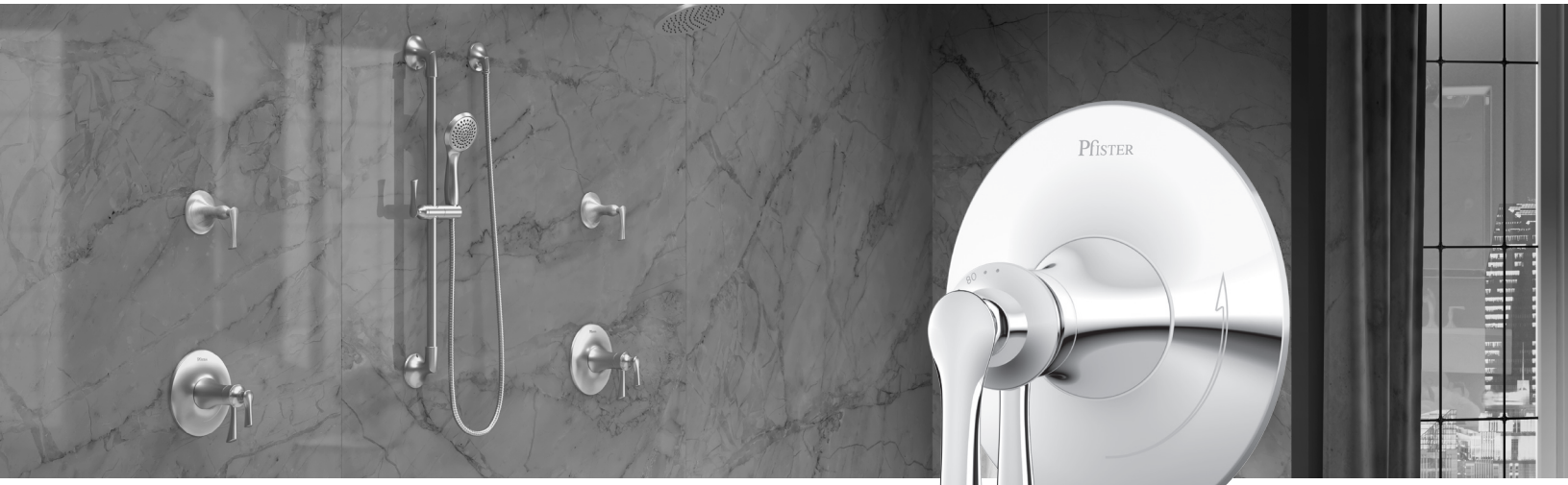

RHEN

Temperature consistency and pressure control at your fingertips.

Achieve precise control in water temperature and pressure without a messy upgrade project. Pfister is introducing ½" pressure balance shower trims that fall within our most popular bathroom styles. Thermostatic trims enable you to adjust your water pressure while maintaining the perfect temperature. With a simple cartridge exchange you can easily upgrade your pressure balance shower to a thermostatic shower without changing your in-wall shower valve.

KENZO

CONTEMPRA

Frequently Asked Questions

How can I distinguish between the pressure balancing cartridge & thermostatic cartridge?
Besides the geometric differences (the thermostatic is much larger in size both diametrically as well as laterally), the thermostatic cartridge has a TYPE T marking on the top of the bonnet to facilitate inspection even with the finished wall in place.

Can customers order the valve body without the cartridge already installed?
Yes, the VB8 skus are valve-only castings with a test plug included. This allows the customers to rough-in the casting and determine the cartridge and trim type at a later date.

Does the thermostatic cartridge support a back-to-back installation?
Yes, if the inlet lines were switched during the rough-in, simply flip the cartridge 180 degrees when inserting it into the valve body.

What type of test plug is provided with the VB8 casting skus?
A full test plug is provided with the VB8 casting which allows plumbers to quickly test the lines for leaks.

Is it necessary to plumb the outlet through the tub port and plug the shower port on the valve body?
No, it is not necessary to plumb the shower head & body sprays through the tub port of the valve body. However, it is recommended in order to achieve the maximum flow attainable and provide the finest shower experience for the user.

How many outlets (showerheads, body sprays, etc) can the TX9 thermostatic cartridge support?
The TX9 cartridge delivers 7gpm @ 60psi and can support a showerhead and up to 2 body sprays. For more shower outlets, additional valves will be required upon rough-in.

How can the same product that delivers 7gpm @ 60 psi also be considered a green product?
The thermostatic valve is regulated by fluctuations in temperature, not pressure. Thus, the thermostatic cartridge can deliver outstanding performance at lower than normal (<2.0gpm) pressure and flow rates.

SHOWROOM PREFERRED

How to order a 1/2” Thermostatic Shower System

Rough-In
Choose the desired rough-in valve

+

Thermostatic Cartridge
TX9-ØØØ1

+

Trim
Select trim

=

1/2" Thermostatic Shower Trim

Available Products

Thermostatic Trim Kits

Chrome
LG89-8TUC

Chrome
LG89-7TUC

1/2" Thermostatic Valve Only Trim

Rhen
Chrome
R89-2RHC

Kenzo
Chrome
R89-2DFC

Contempra
Chrome
R89-2NCC

1/2" Thermostatic Shower System

1/2" Thermostatic Series Tub & Shower Trim

Model	Finish	Case Qty	List Price
LG89-8TUC	Polished Chrome	3	$285
LG89-8TUK	Brushed Nickel	3	$337
LG89-8TUY	Tuscan Bronze	3	$398

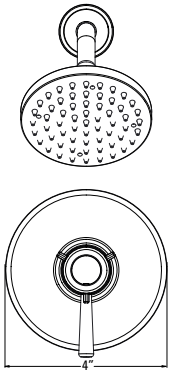

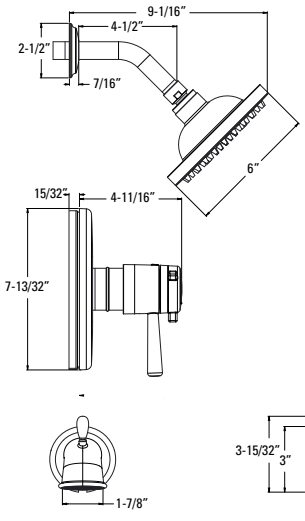

Technical Info

Features:
- Metal Lever Handle(s)
- Hot/Cold Indicator
- Handle Adjusts Volume
- Dial Adjusts Temperature
- Decorative Raincan Showerhead
- Easy To Clean Spray Nozzles
- IP Threaded Metal Diverter Tub Spout
- Quick Trim Wall Flange
- Showerhead 1.8 gpm @ 80 psi

Must Order 1/2" Thermostatic Rough In Valve Separately. See Valve Section.

1/2" Thermostatic Series Shower Trim

LG89-7TUC	Polished Chrome	3	$203
LG89-7TUK	Brushed Nickel	3	$285
LG89-7TUY	Tuscan Bronze	3	$373

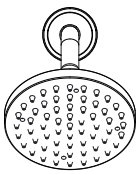

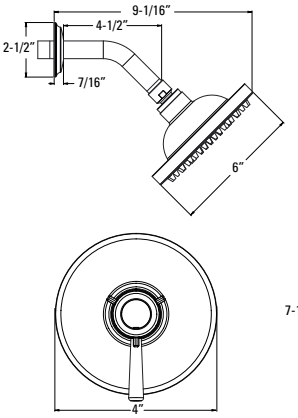

Features:
- Metal Lever Handle(s)
- Hot/Cold Indicator
- Handle Adjusts Volume
- Dial Adjusts Temperature
- Decorative Raincan Showerhead
- Easy To Clean Spray Nozzles
- Quick Trim Wall Flange
- Showerhead 1.8 gpm @ 80 psi

Must Order 1/2" Thermostatic Rough In Valve Separately. See Valve Section.

1/2" Thermostatic Valve Only Trim

R89-1TUC	Polished Chrome	3	$171
R89-1TUK	Brushed Nickel	3	$206
R89-1TUY	Tuscan Bronze	3	$223

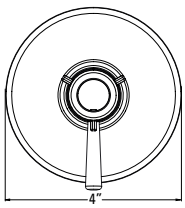

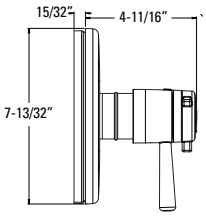

Features:
- Metal Lever Handle(s)
- Hot/Cold Indicator
- Handle Adjusts Volume
- Dial Adjusts Temperature
- Quick Trim Wall Flange

Must Order 1/2" Thermostatic Rough In Valve Separately. See Valve Section.

CEC Compliant | Cal Green Compliant | Meets EPA WaterSense℠ Standards | NSF Lead-Free Certified | ADA Compliant | UltraSeal™ | SecurePfit™

Rhen™
1/2" Thermostatic Valve
Only Trim

Model	Finish	Case Qty	List Price
R89-2RHC	Polished Chrome	3	$285
R89-2RHK	Brushed Nickel	3	$340
R89-2RHB	Matte Black	3	$365
R89-2RHBG	Brushed Gold	3	$389

Available Spring 2018

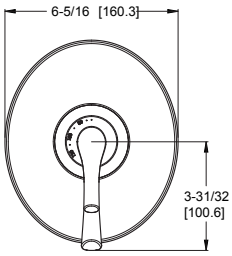

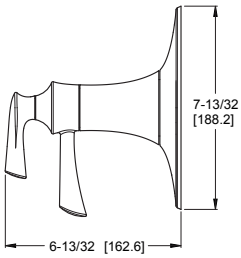

Technical Info

Features:
- SecurePfit™
- Metal Lever Handle
- Front Handle Controls Temperature
- Back Handle Controls Volume

Must Order 1/2" Thermostatic Rough In Valve Separately. See Valve Section.

Kenzo™
1/2" Thermostatic Valve
Only Trim

R89-2DFC	Polished Chrome	3	$266
R89-2DFK	Brushed Nickel	3	$356
R89-2DFB	Matte Black	3	$370

Available Spring 2018

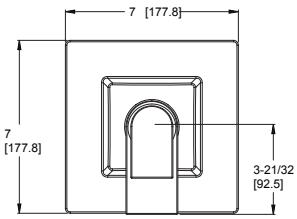

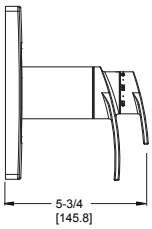

Features:
- SecurePfit™
- Metal Lever Handle
- Front Handle Controls Temperature
- Back Handle Controls Volume

Must Order 1/2" Thermostatic Rough In Valve Separately. See Valve Section.

Contempra®
1/2" Thermostatic Valve
Only Trim

R89-2NCC	Polished Chrome	3	$218
R89-2NCK	Brushed Nickel	3	$270
R89-2NCB	Matte Black	3	$281
R89-2NCBG	Brushed Gold	3	$301

Available Spring 2018

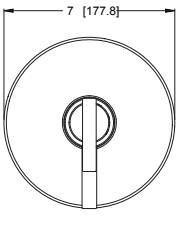

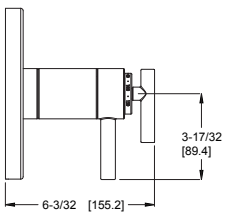

Features:
- SecurePfit™
- Metal Lever Handle
- Front Handle Controls Temperature
- Back Handle Controls Volume

Must Order 1/2" Thermostatic Rough In Valve Separately. See Valve Section.

CEC Compliant | Cal Green Compliant | Meets EPA WaterSense℠ Standards | NSF Lead-Free Certified | ADA Compliant | UltraSeal™ | SecurePfit™

1/2" Thermostatic Shower System

Rhen™
Diverter Trim Only

Model	Finish	Case Qty	List Price
Ø16-RH1C	Polished Chrome	3	$105
Ø16-RH1K	Brushed Nickel	3	$145
Ø16-RH1B	Matte Black	3	$162
Ø16-RH1BG	Brushed Gold	3	$175

Available Spring 2018

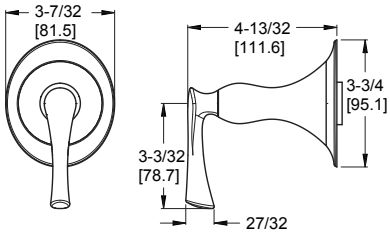

Technical Info

Features:
- Metal Lever Handle and Matching Flange
- Can Be Used with Ø15-2WDX for Cal Green Compliant Applications

Must Order Ø15-4WDX or Ø15-2WDX Rough In Valve Separately. See Valve Section.

Kenzo™
Diverter Trim Only

Model	Finish	Case Qty	List Price
Ø16-DFØC	Polished Chrome	3	$102
Ø16-DFØK	Brushed Nickel	3	$141
Ø16-DFØB	Matte Black	3	$144

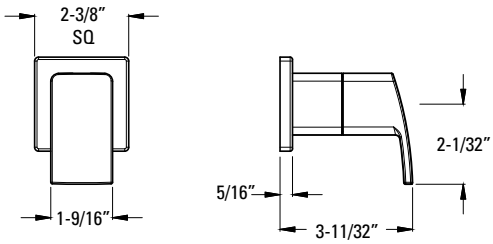

Features:
- SecurePfit™
- Metal Lever Handle and Matching Flange
- Can Be Used with Ø15-2WDX for Cal Green Compliant Applications

Must Order Ø15-4WDX or Ø15-2WDX Rough In Valve Separately. See Valve Section.

Contempra®
Diverter Trim Only

Model	Finish	Case Qty	List Price
Ø16-NC1C	Polished Chrome	3	$81
Ø16-NC1K	Brushed Nickel	3	$106
Ø16-NC1B	Matte Black	3	$122
Ø16-NC1BG	Brushed Gold	3	$147

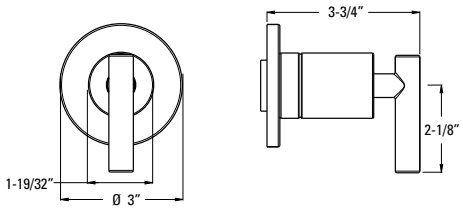

Features:
- Secure Pfit™
- Metal Lever Handle and Matching Flange
- Can Be Used with Ø15-2WDX for Cal Green Compliant Applications

Must Order Ø15-4WDX or Ø15-2WDX Rough In Valve Separately. See Valve Section.

Rhen™
Slide Bar/Hand Shower Kit

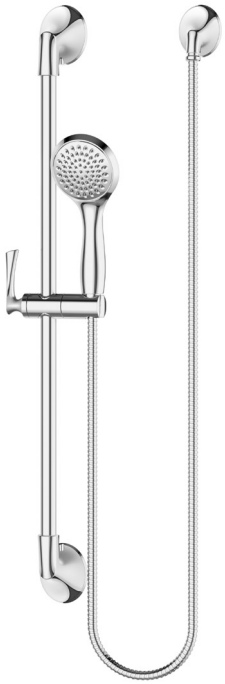

Model	Finish	Case Qty	List Price
LG16-3RHC	Polished Chrome	3	$325
LG16-3RHK	Brushed Nickel	3	$430
LG16-3RHB	Matte Black	3	$502
LG16-3RHBG	Brushed Gold	3	$524

Available Fall 2018

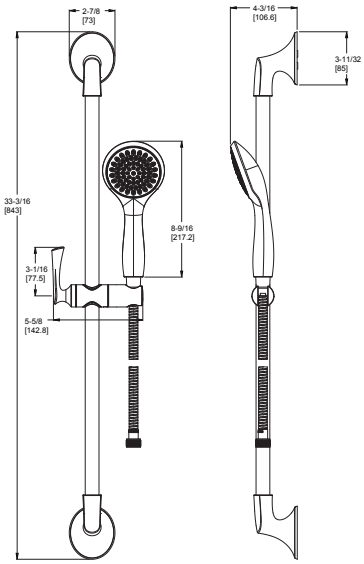

Technical Info

Features:
- Complete Slide Bar Package with Hand Shower, Hose, Drop Elbow, and Slide Bar
- Self Cleaning Handheld Showerhead
- 60" Metal Hose with Matching Finish
- Back Flow Prevention
- Works with Rhen Diverter Trim and Valve
- Not to be Used as a Grab Bar
- Hand Shower 1.8 gpm @ 60 psi

Kenzo™
Slide Bar/ Hand Shower Kit

LG16-3DFC	Polished Chrome	3	$331
LG16-3DFK	Brushed Nickel	3	$440
LG16-3DFB	Matte Black	3	$513

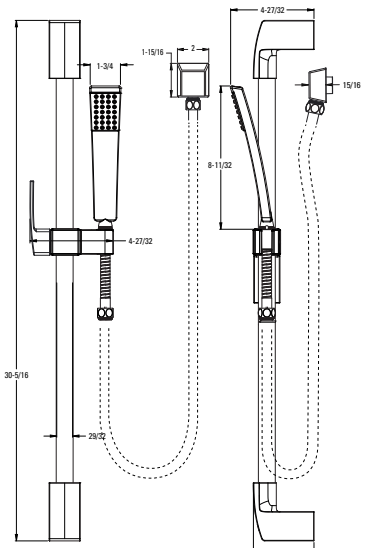

Features:
- Complete Slide Bar Package with Hand Shower, Hose, Drop Elbow, and Slide Bar
- All Metal Slide Bar
- Wall Mount Bracket and Drop Elbow
- Easy To Clean Spray Nozzles
- 60" Metal Hose with Matching Finish
- Back Flow Prevention
- Works with Kenzo Diverter Trim and Valve
- Not to be Used as a Grab Bar
- Hand Shower 1.8 gpm @ 80 psi

CEC Compliant | Cal Green Compliant | Meets EPA WaterSense℠ Standards | NSF Lead-Free Certified | ADA Compliant | UltraSeal™ | SecurePfit™

Common Installation

Showerhead & Hand Shower

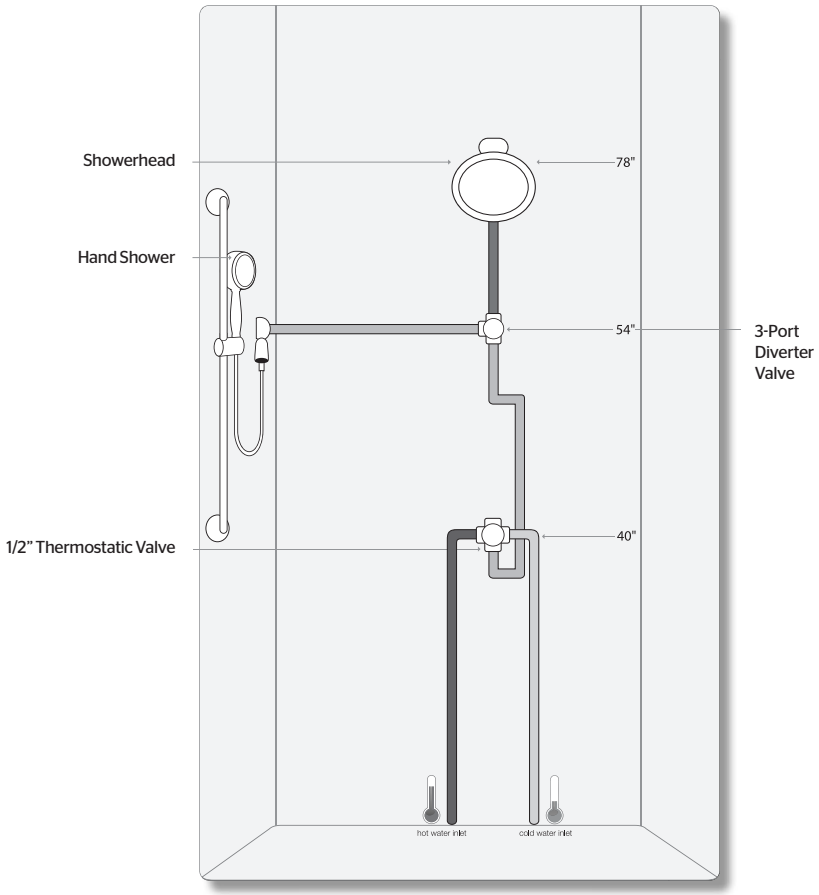

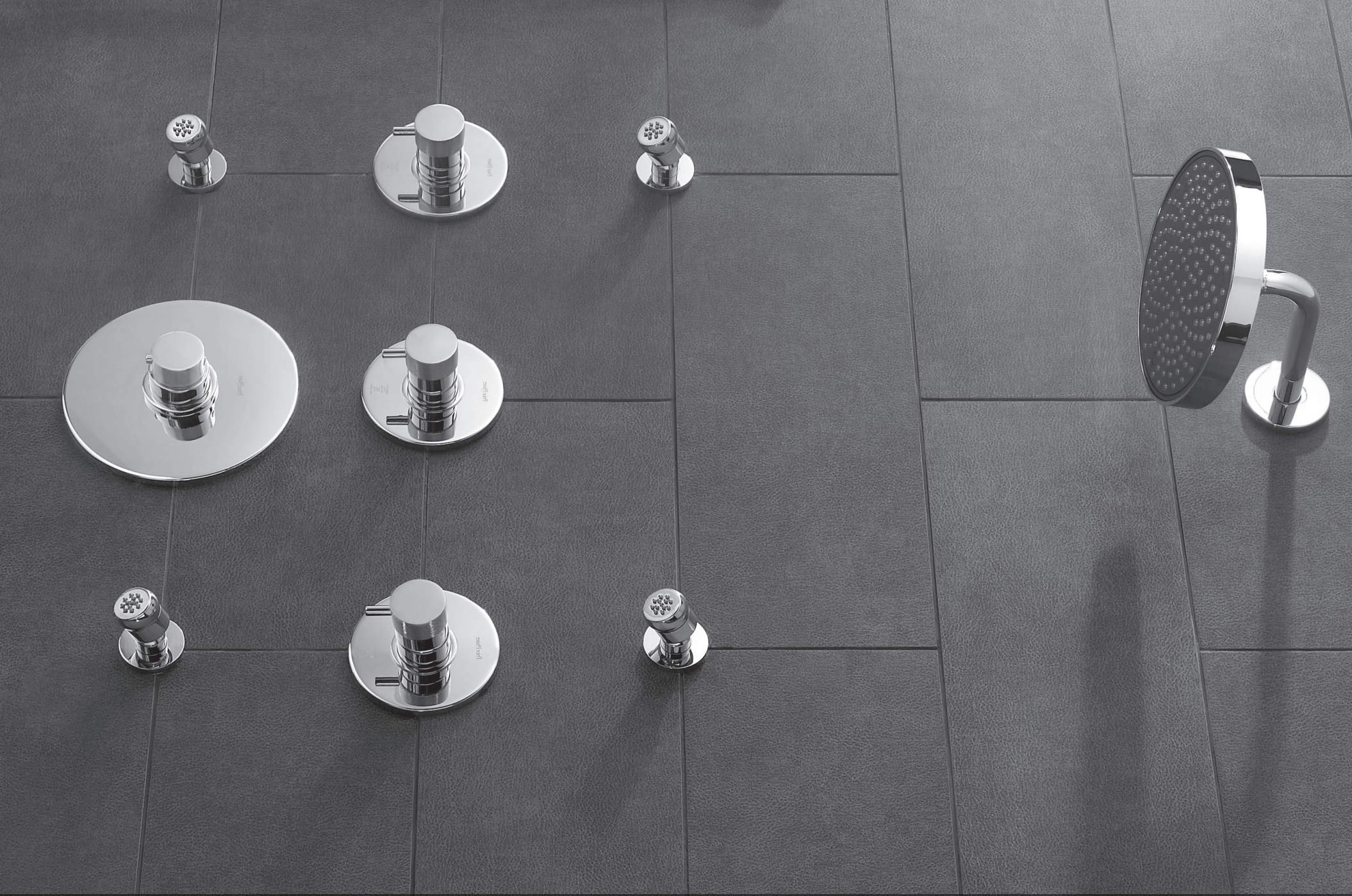

3/4” THERMOSTATIC

Available Products

3/4" Trim Kit (with Thermostatic Cartridge)

Polished Chrome
R89-9THC

Brushed Nickel
R89-9THK

Trim for 3-Port Diverter

Polished Chrome
R79-6ØØC

Brushed Nickel
R79-6ØØK

Showerhead and Arm

Polished Chrome
LG15-TH1C

Brushed Nickel
LG15-TH1K

Trim Kit for Volume Valve

Polished Chrome
R79-9VUC

Brushed Nickel
R79-9VUK

Body Spray

Polished Chrome
LG15-HFØC

Brushed Nickel
LG15-HFØK

Hand Shower Slide Bar Package

Polished Chrome, Trim
LG16-3ØØC

Brushed Nickel, Trim
LG16-3ØØK

Frequently Asked Questions

Do I need to remove the thermostatic cartridge when roughing in the 3/4" valve?
No, the rough-in valve ships with a plug for testing, but the actual cartridge ships with the trim components so no cartridge removal is necessary during rough-in

If I want to use 3/4" thermostatic valve, do I always need to use volume control?
Yes – our 3/4" thermostatic valve is temperature only so you always need to use 1 volume control valve to control flow rate and on/off function

How many functions/operations can the 3-port diverter run?
Total of 6 positions are available – 3 one-function and 3 two-function combination settings

Do I need to use a volume control valve with a 3-port diverter/thermostatic valve combination?
Yes. In addition to your thermostatic and diverter valves, you will need 1 volume control valve

Should I cap the tub or the shower port in a shower-system configuration?
Always cap the tub spout when using the 3/4" valve in a vertical spa configuration

How should I plumb body sprays to ensure proper pressure balancing?
A pressure balancing loop must always be used with body sprays to allow for equal supply of water to each spray

How should I connect body sprays to water supply?
Thread body sprays onto 1/2" male NPT pipe which is plumbed in a loop system

Should I use 3/4" or 1/2" tubing/pipe for water supply rough-in?
We recommend using 3/4" tubing/pipe between thermostatic and flow valves, with 1/2" everywhere else – However, if 3/4" is available to plumb entire system, it is preferred, but 1/2" will not diminish performance

SHOWROOM PREFERRED

How to order a 3/4" Thermostatic OT8 Series Shower System

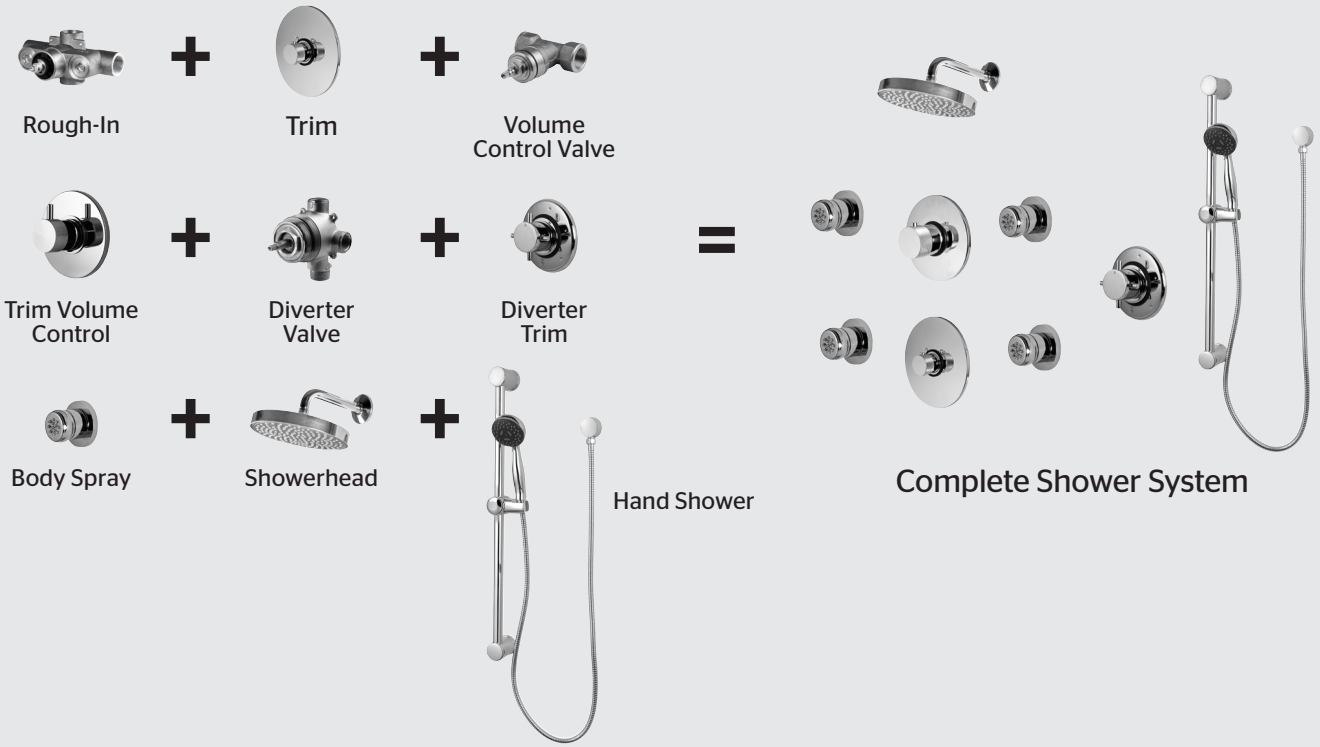

	Model	Finish		List Price
Universal 3/4" Thermostatic Valve Only Trim	R89-9THC	Polished Chrome	1	$192
	R89-9THK	Brushed Nickel	1	$213

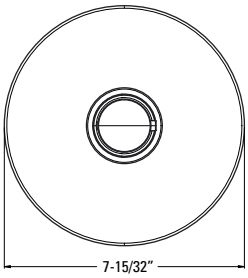

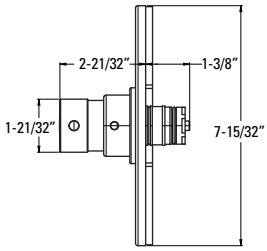

Technical Info

Features:
- Single-Function Thermostatic Cartridge
- Metal Handle
- Wall Flange
- Handle Adjusts Temperature Only
- Must Order ØT8-41ØA Rough-In Valve Body Separately
- Must Order Volume Control Valve (Ø14-3ØØA) & Trim (R78-9VU*)
- 2" Extension Kit Available, See Extension Kits Section

Thermostatic

3/4" Thermostatic Shower System

	Model	Finish	Case Qty	List Price
Universal Ø14 Series Volume Control Valve Trim	R78-9VUC	Polished Chrome	1	103
	R78-9VUK	Brushed Nickel	1	$144

Technical Info

Features:
- Metal Handle
- Wall Flange
- Handle Adjusts Volume Only
- Must Order Rough In Valve (Ø14-3ØØA) Separately
- 2" Extension Kit Available, See Extension Kits Section

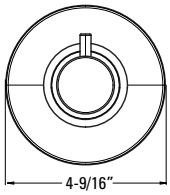

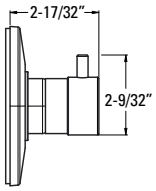

Universal Ø16 Series Diverter Trim	R79-6ØØC	Polished Chrome	1	$134
	R79-6ØØK	Brushed Nickel	1	$186

Features:
- Metal Handle
- Wall Flange
- Must Order Rough In Valve (Ø16-6ØØA) Separately
- 2" Extension Kit Available, See Extension Kits Section

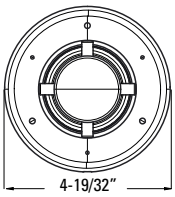

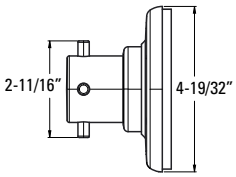

SHOWROOM PREFERRED

Universal Shower Body Spray

Model	Finish	Case Qty	List Price
LG15-HFØC	Polished Chrome	10	$92
LG15-HFØK	Brushed Nickel	10	$112

Technical Info

Features:
- 1 Body Spray per Package
- 1/2" Pipe Fitting
- Body Spray 1.8 gpm @ 80 psi

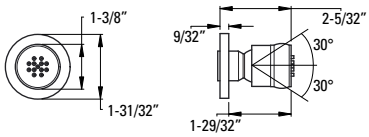

Universal Raincan Showerhead

LG15-TH1C	Polished Chrome	4	$121
LG15-TH1K	Brushed Nickel	4	$180

Features:
- Raincan Showerhead
- Shower Arm
- Metal Wall Flange
- Easy To Clean Spray Nozzles
- Showerhead 1.8 @ 80 psi

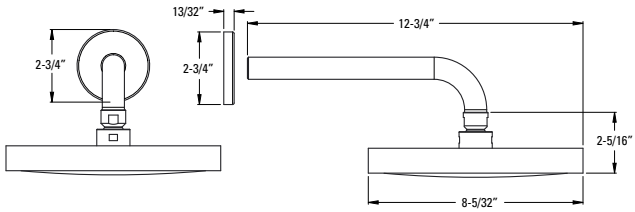

Slide Bar Package

LG16-3ØØC	Polished Chrome	1	$206
LG16-3ØØK	Brushed Nickel	1	$351

Features:
- 3-Function Hand Shower with Dual Check Valves
- Functions: Penetrating Massage, Rain Spray and Invigorating Spray
- Hand Shower, Hose, Slide Bar and Drop Elbow
- Metal Slide Bar
- 60" Matching Finish Metal Hose
- Push Mechanism for Height Adjustment
- Not to be Used as a Grab Bar
- Hand Shower 1.8 @ 80 psi

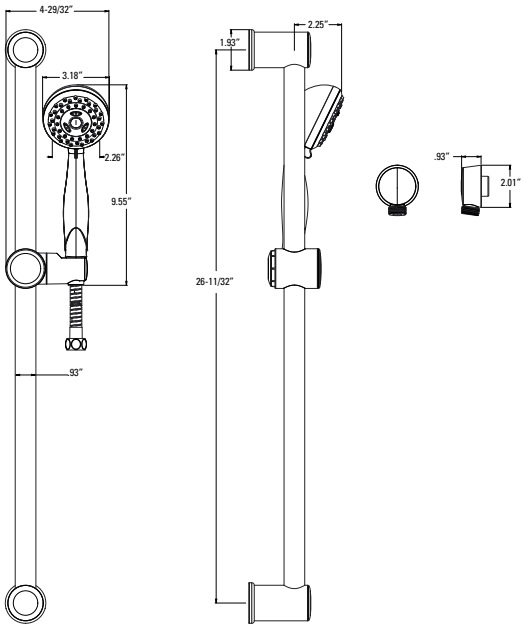

Thermostatic

Common Installation Types

Showerhead & Hand Shower

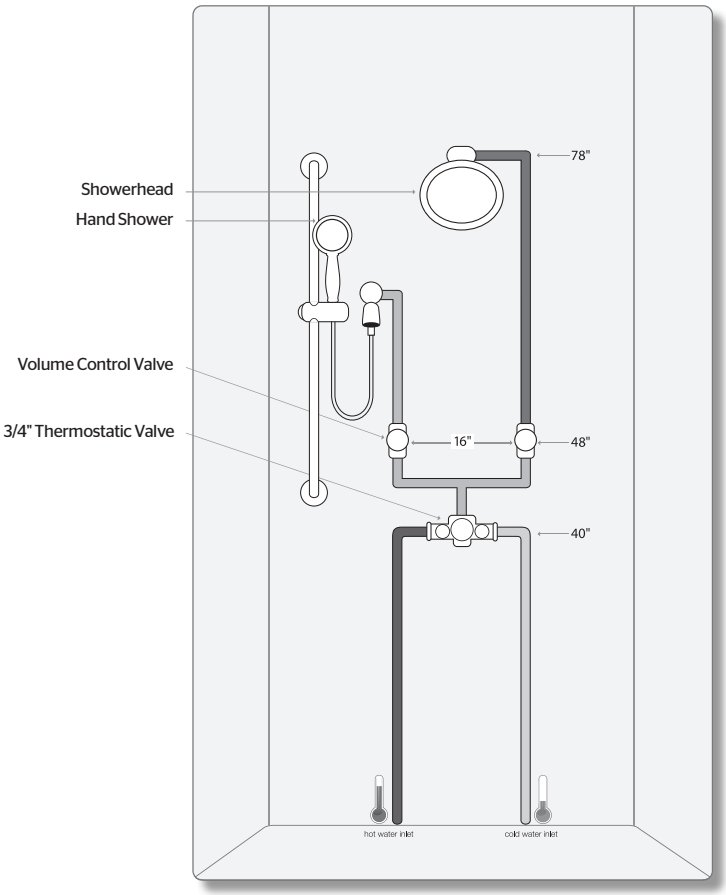

Showerhead, Hand Shower & Body Spray

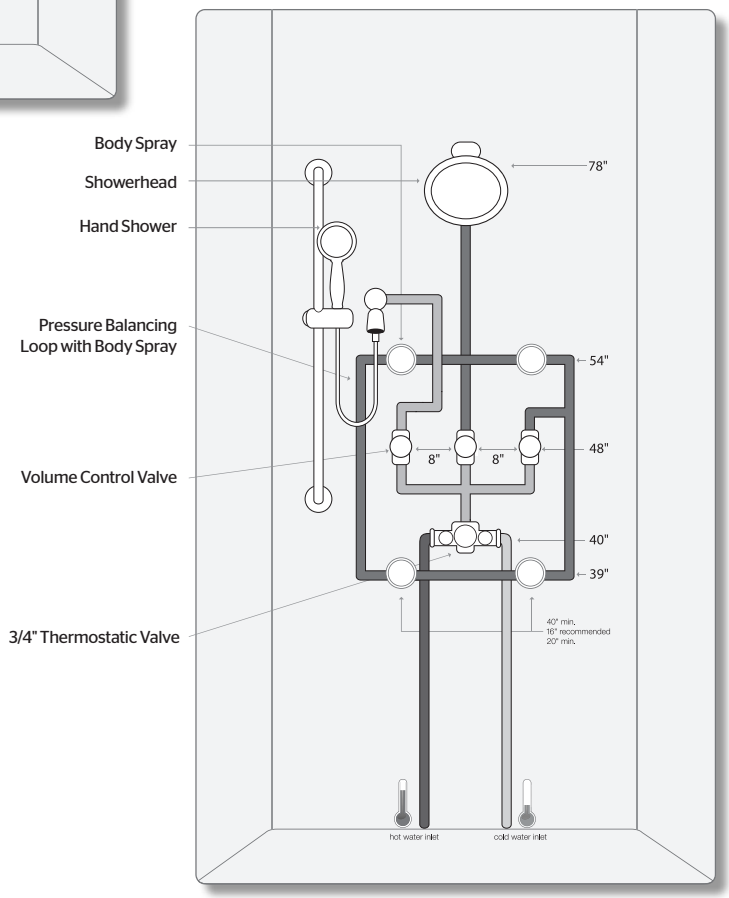

SHOWROOM PREFERRED

Ceiling Mount Showerhead, Wall Mount Showerhead & Wall Mount Hand Shower

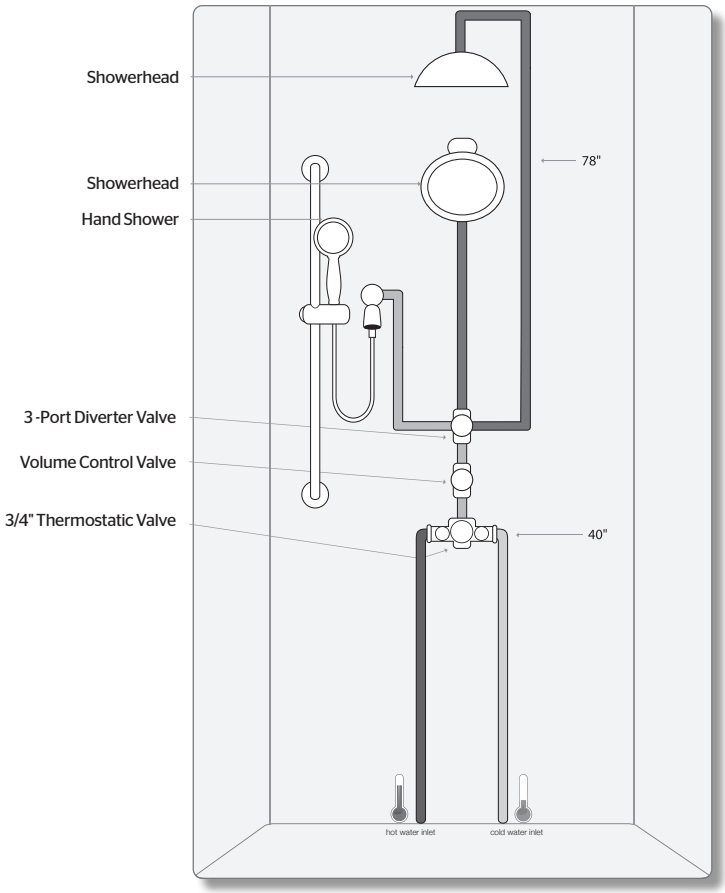

Wall Mount Showerhead, Hand Shower & Body Spray

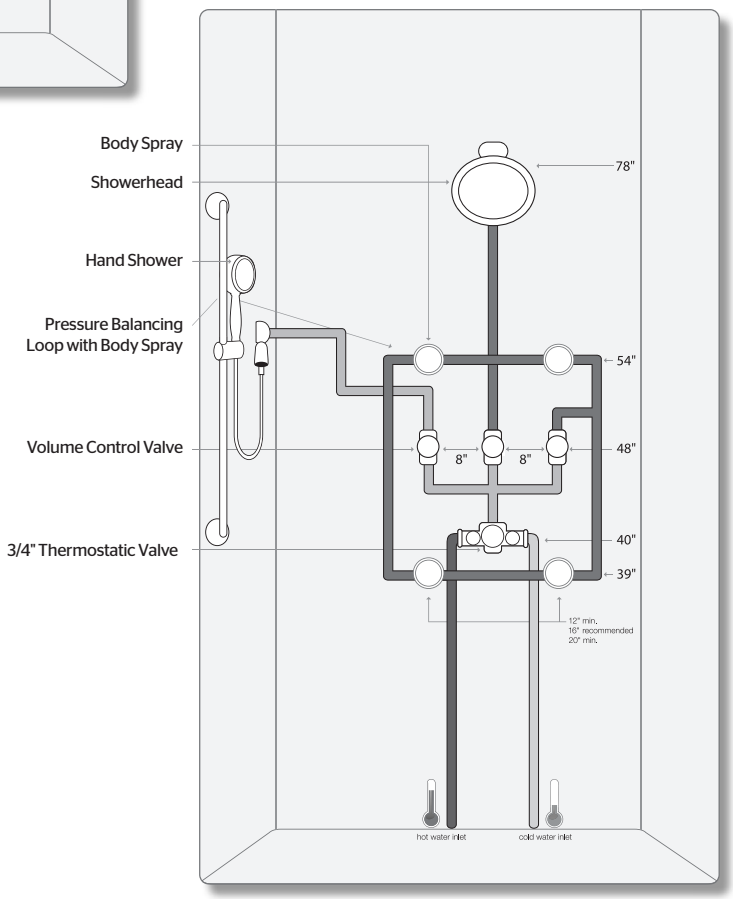

Showerhead, Wall Mount Hand Shower & Body Spray

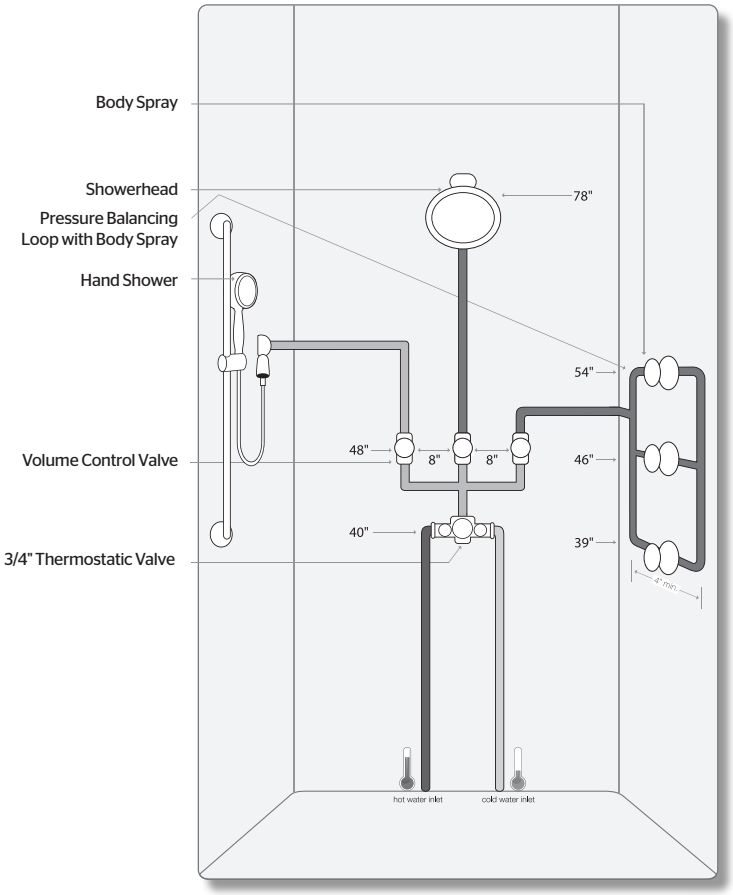

Showerhead, Body Sprays (2 Walls) & Hand Shower

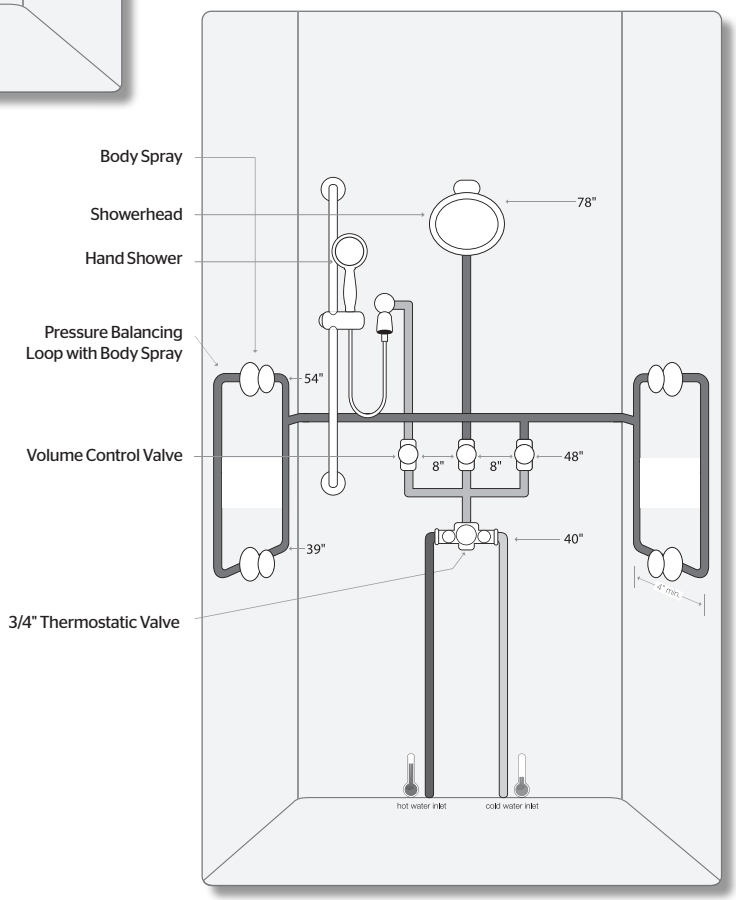

BATH ACCESSORIES

Rhen™ - Accessories

18" Towel Bar

Model	Finish	Case Qty	List Price
BTB-RH1C	Polished Chrome	3	$107
BTB-RH1K	Brushed Nickel	3	$117
BTB-RH1B	Matte Black	3	$127
BTB-RH1BG	Brushed Gold	3	$137

Available Fall 2018

Technical Info

Holes: • 2-Hole

Features:
- Premium Metal Construction
- Superior Mounting Posts
- Concealed Screw Installation
- Mounting Hardware Included

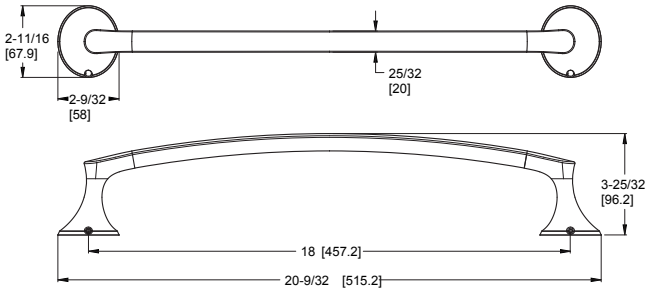

24" Double Towel Bar

Model	Finish	Case Qty	List Price
BTB-RH2C	Polished Chrome	3	$155
BTB-RH2K	Brushed Nickel	3	$165
BTB-RH2B	Matte Black	3	$175
BTB-RH2BG	Brushed Gold	3	$185

Available Fall 2018

Holes: • 2-Hole

Features:
- Premium Metal Construction
- Superior Mounting Posts
- Concealed Screw Installation
- Mounting Hardware Included

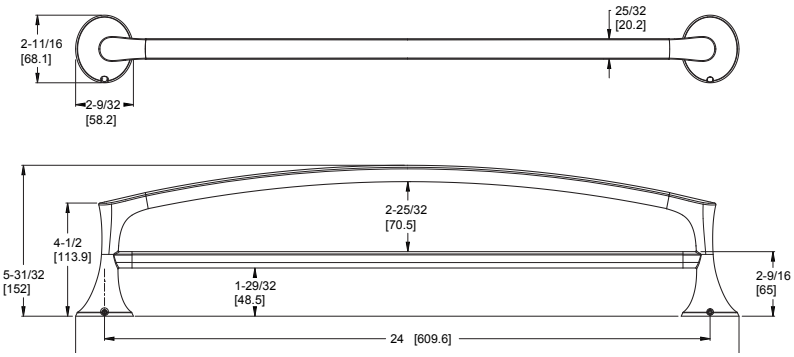

Towel Ring

Model	Finish	Case Qty	List Price
BRB-RHØC	Polished Chrome	3	$82
BRB-RHØK	Brushed Nickel	3	$92
BRB-RHØB	Matte Black	3	$102
BRB-RHØBG	Brushed Gold	3	$112

Available Fall 2018

Holes: • 2-Hole

Features:
- Premium Metal Construction
- Superior Mounting Posts
- Concealed Screw Installation
- Mounting Hardware Included

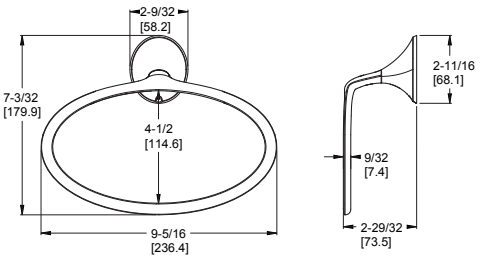

Paper Holder

Model	Finish	Case Qty	List Price
BPH-RHØC	Polished Chrome	3	$80
BPH-RHØK	Brushed Nickel	3	$95
BPH-RHØB	Matte Black	3	$105
BPH-RHØBG	Brushed Gold	3	$115

Available Fall 2018

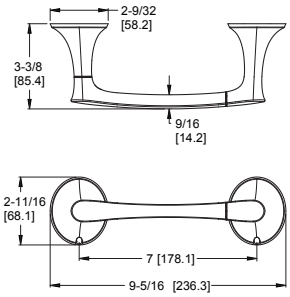

Technical Info

Holes: • 1-Hole

Features:
- Premium Metal Construction
- Pivot Swing Paper Mount
- Concealed Screw Installation
- Mounting Hardware Included

Robe Hook

BRH-RHØC	Polished Chrome	3	$55
BRH-RHØK	Brushed Nickel	3	$65
BRH-RHØB	Matte Black	3	$75
BRH-RHØBG	Brushed Gold	3	$85

Available Fall 2018

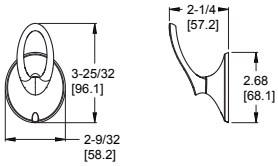

Holes: • 1-Hole

Features:
- Premium Metal Construction
- Superior Mounting Posts
- Concealed Screw Installation
- Mounting Hardware Included

Kenzo™ - Accessories

18" Towel Bar

Model	Finish	Case Qty	List Price
BTB-DF1C	Polished Chrome	3	$100
BTB-DF1K	Brushed Nickel	3	$153
BTB-DF1B	Matte Black	3	$156

Technical Info

Holes: • 2-Hole

Features:
- Premium Metal Construction
- Superior Mounting Posts
- Concealed Screw Installation
- Mounting Hardware Included

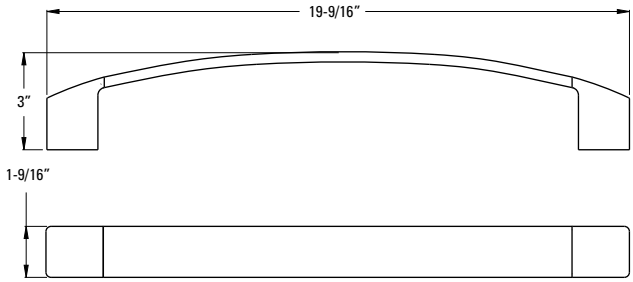

24" Towel Bar

Model	Finish	Case Qty	List Price
BTB-DF2C	Polished Chrome	3	$123
BTB-DF2K	Brushed Nickel	3	$176
BTB-DF2B	Matte Black	3	$181

Holes: • 2-Hole

Features:
- Premium Metal Construction
- Superior Mounting Posts
- Concealed Screw Installation
- Mounting Hardware Included

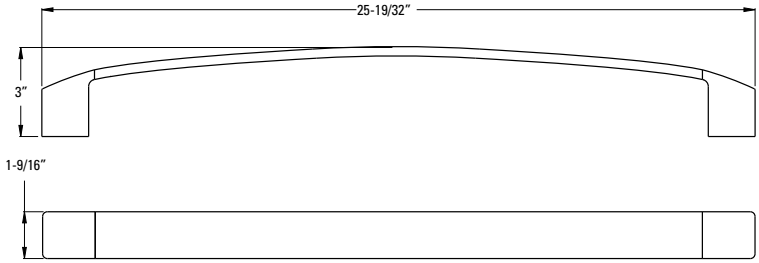

Hand Towel Ring

Model	Finish	Case Qty	List Price
BRB-DF1C	Polished Chrome	3	$95
BRB-DF1K	Brushed Nickel	3	$134
BRB-DF1B	Matte Black	3	$136

Holes: • 2-Hole

Features:
- Premium Metal Construction
- Superior Mounting Posts
- Concealed Screw Installation
- Mounting Hardware Included

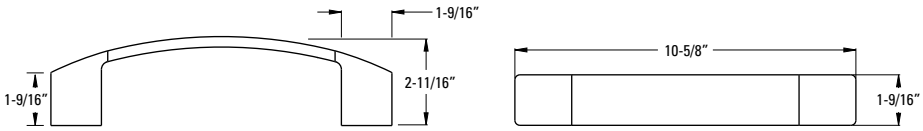

SHOWROOM PREFERRED

Paper Holder

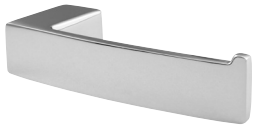

Model	Finish	Case Qty	List Price
BPH-DF1C	Polished Chrome	3	$77
BPH-DF1K	Brushed Nickel	3	$111
BPH-DF1B	Matte Black	3	$112

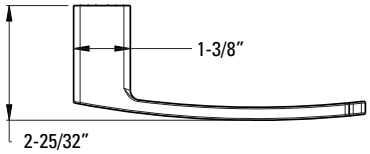

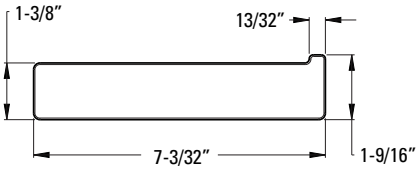

Technical Info

Holes: • 1-Hole

Features:
- Premium Metal Construction
- Superior Mounting Posts
- Concealed Screw Installation
- Mounting Hardware Included

Robe Hook

Model	Finish	Case Qty	List Price
BRH-DF1C	Polished Chrome	3	$59
BRH-DF1K	Brushed Nickel	3	$86
BRH-DF1B	Matte Black	3	$87

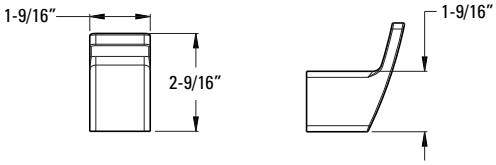

Technical Info

Holes: • 1-Hole

Features:
- Premium Metal Construction
- Superior Mounting Posts
- Concealed Screw Installation
- Mounting Hardware Included

Ashfield™ - Accessories

24" Towel Bar

Model	Finish	Case Qty	List Price
BTB-YP2C	Polished Chrome	4	$67
BTB-YP2K	Brushed Nickel	4	$103
BTB-YP2Y	Tuscan Bronze	4	$107
BTB-YP2U	Rustic Bronze	4	$107

Technical Info

Holes: • 2-Hole

Features:
- Premium Metal Construction
- Superior Mounting Posts
- Concealed Screw Installation
- Mounting Hardware Included

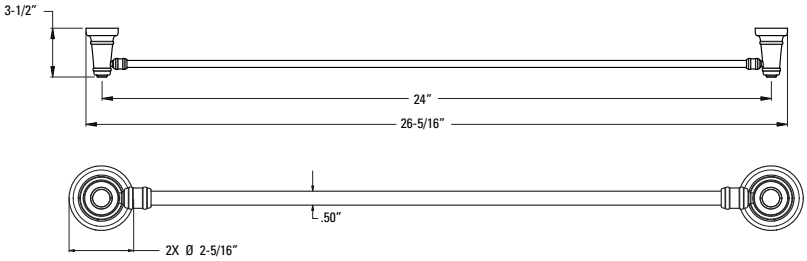

24" Double Towel Bar

BTB-YP5C	Polished Chrome	4	$124
BTB-YP5K	Brushed Nickel	4	$190
BTB-YP5Y	Tuscan Bronze	4	$210
BTB-YP5U	Rustic Bronze	4	$190

Holes: • 2-Hole

Features:
- Premium Metal Construction
- Superior Mounting Posts
- Concealed Screw Installation
- Mounting Hardware Included

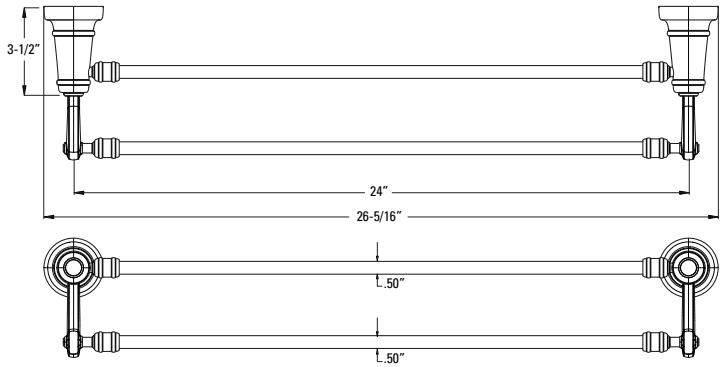

Towel Hook

BRB-YPØC	Polished Chrome	4	$49
BRB-YPØK	Brushed Nickel	4	$73
BRB-YPØY	Tuscan Bronze	4	$78
BRB-YPØU	Rustic Bronze	4	$78

Holes: • 1-Hole

Features:
- Premium Metal Construction
- Superior Mounting Posts
- Concealed Screw Installation
- Mounting Hardware Included

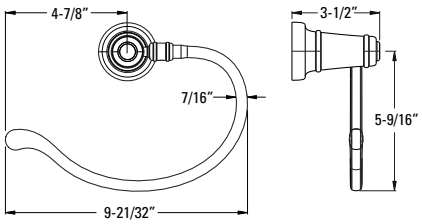

Paper Holder

Model	Finish	Case Qty	List Price
BPH-YP1C	Polished Chrome	4	$53
BPH-YP1K	Brushed Nickel	4	$79
BPH-YP1Y	Tuscan Bronze	4	$80
BPH-YP1U	Rustic Bronze	4	$97

Technical Info

Holes: • 1-Hole

Features:
- Premium Metal Construction
- Superior Mounting Posts
- Concealed Screw Installation
- Mounting Hardware Included

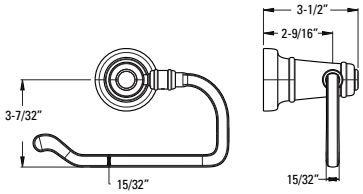

Robe Hook

BRH-YPØC	Polished Chrome	4	$31
BRH-YPØK	Brushed Nickel	4	$44
BRH-YPØY	Tuscan Bronze	4	$50
BRH-YPØU	Rustic Bronze	4	$46

Holes: • 1-Hole

Features:
- Premium Metal Construction
- Superior Mounting Posts
- Concealed Screw Installation
- Mounting Hardware Included

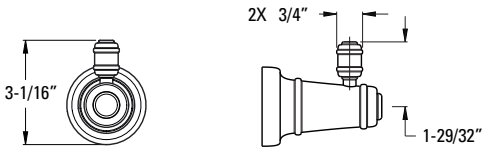

Arterra™ - Accessories

18" Towel Bar

Model	Finish	Case Qty	List Price
BTB-DE1C	Polished Chrome	3	$85
BTB-DE1K	Brushed Nickel	3	$96
BTB-DE1D	Polished Nickel	3	$96
BTB-DE1Y	Tuscan Bronze	3	$109

Technical Info

Holes: • 2-Hole

Features:
- Premium Metal Construction
- Superior Mounting Posts
- Concealed Screw Installation
- Mounting Hardware Included

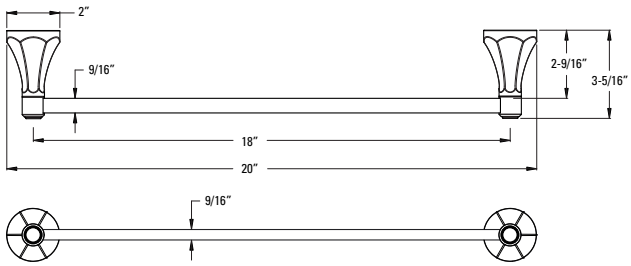

24" Towel Bar

Model	Finish	Case Qty	List Price
BTB-DE2C	Polished Chrome	3	$99
BTB-DE2K	Brushed Nickel	3	$109
BTB-DE2D	Polished Nickel	3	$109
BTB-DE2Y	Tuscan Bronze	3	$125

Holes: • 2-Hole

Features:
- Premium Metal Construction
- Superior Mounting Posts
- Concealed Screw Installation
- Mounting Hardware Included

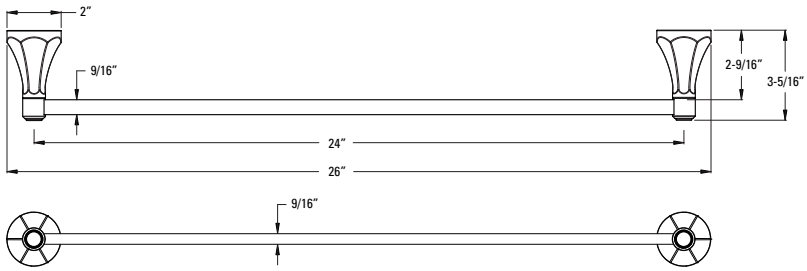

Towel Hook

Model	Finish	Case Qty	List Price
BRB-DEØC	Polished Chrome	3	$65
BRB-DEØK	Brushed Nickel	3	$80
BRB-DEØD	Polished Nickel	3	$80
BRB-DEØY	Tuscan Bronze	3	$91

Holes: • 1-Hole

Features:
- Premium Metal Construction
- Superior Mounting Posts
- Concealed Screw Installation
- Mounting Hardware Included

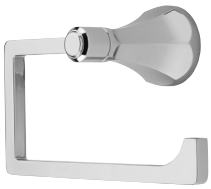

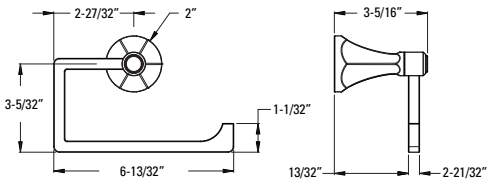

SHOWROOM PREFERRED

Paper Holder

Model	Finish	Case Qty	List Price
BPH-DEØC	Polished Chrome	3	$65
BPH-DEØK	Brushed Nickel	3	$80
BPH-DEØD	Polished Nickel	3	$80
BPH-DEØY	Tuscan Bronze	3	$93

Technical Info

Holes: • 2-Hole

Features:
- Swivel Mount Paper Holder
- Premium Metal Construction
- Superior Mounting Posts
- Concealed Screw Installation
- Mounting Hardware Included

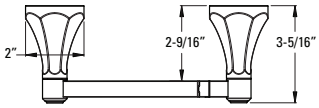

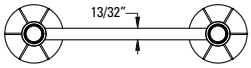

Robe Hook

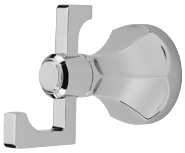

Model	Finish	Case Qty	List Price
BRH-DEØC	Polished Chrome	3	$34
BRH-DEØK	Brushed Nickel	3	$38
BRH-DEØD	Polished Nickel	3	$38
BRH-DEØY	Tuscan Bronze	3	$44

Holes: • 1-Hole

Features:
- Premium Metal Construction
- Superior Mounting Posts
- Concealed Screw Installation
- Mounting Hardware Included

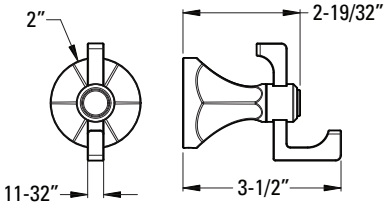

18" Towel Bar

Model	Finish	Case Qty	List Price
BTB-MB1C	Polished Chrome	3	$63
BTB-MB1K	Brushed Nickel	3	$74
BTB-MB1D	Polished Nickel	3	$74
BTB-MB1Y	Tuscan Bronze	3	$87

Technical Info

Holes: • 2-Hole

Features:
- Premium Metal Construction
- Standard Mounting Posts
- Concealed Screw Installation
- Mounting Hardware Included

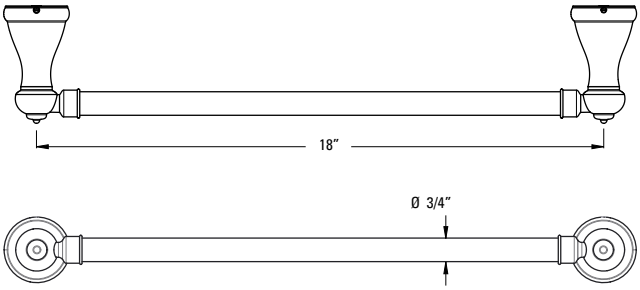

24" Towel Bar

BTB-MB2C	Polished Chrome	3	$86
BTB-MB2K	Brushed Nickel	3	$98
BTB-MB2D	Polished Nickel	3	$98
BTB-MB2Y	Tuscan Bronze	3	$111

Holes: • 2-Hole

Features:
- Premium Metal Construction
- Standard Mounting Posts
- Concealed Screw Installation
- Mounting Hardware Included

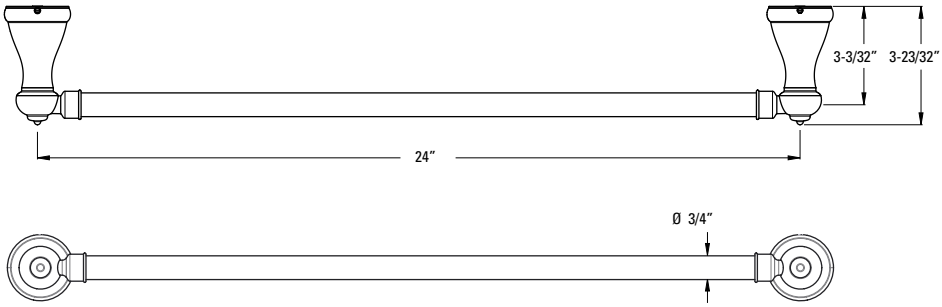

Towel Ring

BRB-MB1C	Polished Chrome	3	$45
BRB-MB1K	Brushed Nickel	3	$55
BRB-MB1D	Polished Nickel	3	$55
BRB-MB1Y	Tuscan Bronze	3	$68

Holes: • 1-Hole

Features:
- Premium Metal Construction
- Standard Mounting Posts
- Concealed Screw Installation
- Mounting Hardware Included

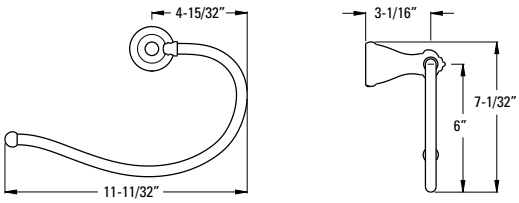

SHOWROOM PREFERRED

Paper Holder

Model	Finish	Case Qty	List Price
BPH-MB1C	Polished Chrome	3	$52
BPH-MB1K	Brushed Nickel	3	$64
BPH-MB1D	Polished Nickel	3	$64
BPH-MB1Y	Tuscan Bronze	3	$70

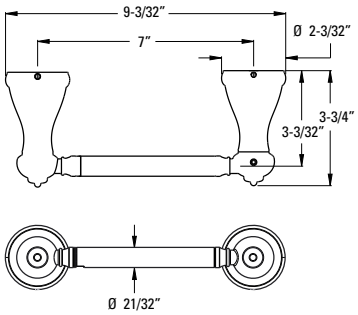

Technical Info

Holes: • 2-Hole

Features:
- Swivel Mount Paper Holder
- Premium Metal Construction
- Standard Mounting Posts
- Concealed Screw Installation
- Mounting Hardware Included

Robe Hook

BRH-MB1C	Polished Chrome	3	$27
BRH-MB1K	Brushed Nickel	3	$39
BRH-MB1D	Polished Nickel	3	$39
BRH-MB1Y	Tuscan Bronze	3	$51

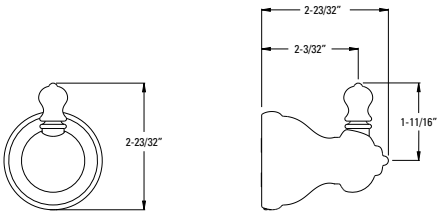

Holes: • 1-Hole

Features:
- Premium Metal Construction
- Standard Mounting Posts
- Concealed Screw Installation
- Mounting Hardware Included

18" Towel Bar

Model	Finish	Case Qty	List Price
BTB-NC1C	Polished Chrome	3	$54
BTB-NC1K	Brushed Nickel	3	$76
BTB-NC1B	Matte Black	3	$81
BTB-NC1BG	Brushed Gold	3	$99

Matte Black Available Fall 2018

Technical Info

Holes: • 2-Hole

Features:
- Premium Metal Construction
- Standard Mounting Bracket
- Concealed Screw Installation
- Mounting Hardware Included

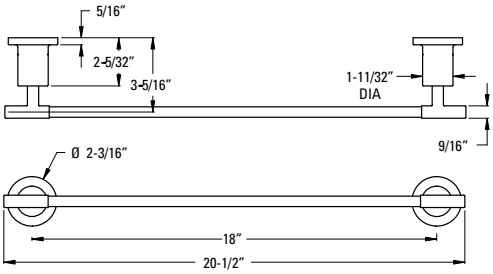

24" Towel Bar

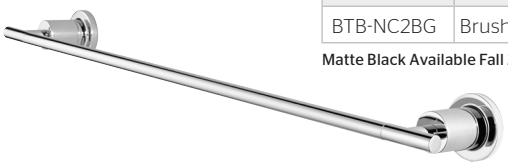

Model	Finish	Case Qty	List Price
BTB-NC2C	Polished Chrome	3	$59
BTB-NC2K	Brushed Nickel	3	$81
BTB-NC2B	Matte Black	3	90
BTB-NC2BG	Brushed Gold	3	$108

Matte Black Available Fall 2018

Holes: • 2-Hole

Features:
- Premium Metal Construction
- Standard Mounting Bracket
- Concealed Screw Installation
- Mounting Hardware Included

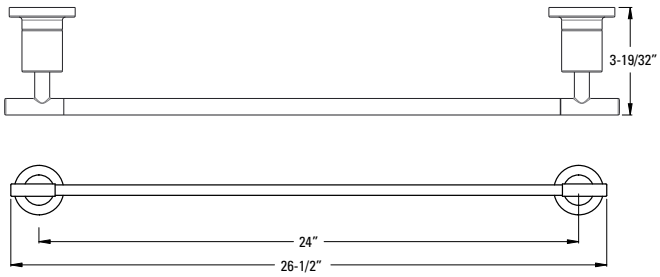

Towel Ring

Model	Finish	Case Qty	List Price
BRB-NC1C	Polished Chrome	3	$44
BRB-NC1K	Brushed Nickel	3	$54
BRB-NC1B	Matte Black	3	$66
BRB-NC1BG	Brushed Gold	3	$79

Matte Black Available Fall 2018

Holes: • 1-Hole

Features:
- Premium Metal Construction
- Standard Mounting Bracket
- Concealed Screw Installation
- Mounting Hardware Included

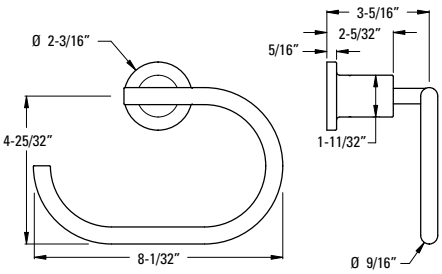

SHOWROOM PREFERRED

Paper Holder

Model	Finish	Case Qty	List Price
BPH-NC1C	Polished Chrome	3	$44
BPH-NC1K	Brushed Nickel	3	$59
BPH-NC1B	Matte Black	3	$66
BPH-NC1BG	Brushed Gold	3	$79

Matte Black Available Fall 2018

Technical Info

Holes: • 2-Hole

Features:
- Swivel Mount Paper Holder
- Premium Metal Construction
- Standard Mounting Bracket
- Concealed Screw Installation
- Mounting Hardware Included

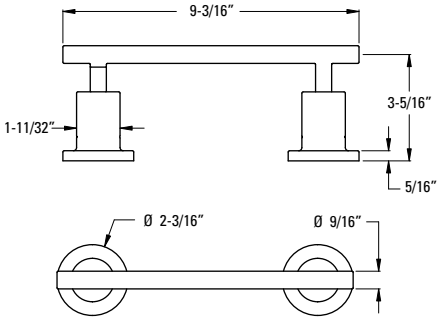

Robe Hook

BRH-NC1C	Polished Chrome	3	$33
BRH-NC1K	Brushed Nickel	3	$44
BRH-NC1B	Matte Black	3	$49
BRH-NC1BG	Brushed Gold	3	$58

Matte Black Available Fall 2018

Holes: • 1-Hole

Features:
- Premium Metal Construction
- Standard Mounting Bracket
- Concealed Screw Installation
- Mounting Hardware Included

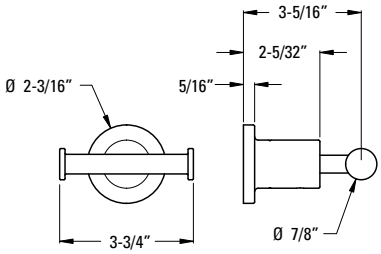

18" Towel Bar

Model	Finish	Case Qty	List Price
BTB-DA1C	Polished Chrome	3	$52
BTB-DA1K	Brushed Nickel	3	$57
BTB-DA1B	Matte Black	3	$63

Technical Info

Holes: • 2-Hole

Features:
- All Metal Construction
- Standard Mounting Brackets
- Concealed Screw Installation
- Mounting Hardware Included

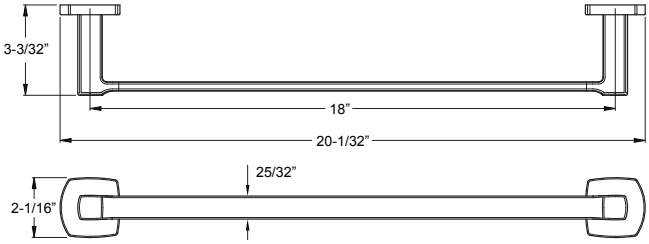

24" Towel Bar

BTB-DA2C	Polished Chrome	3	$54
BTB-DA2K	Brushed Nickel	3	$59
BTB-DA2B	Matte Black	3	$66

Holes: • 2-Hole

Features:
- All Metal Construction
- Standard Mounting Brackets
- Concealed Screw Installation
- Mounting Hardware Included

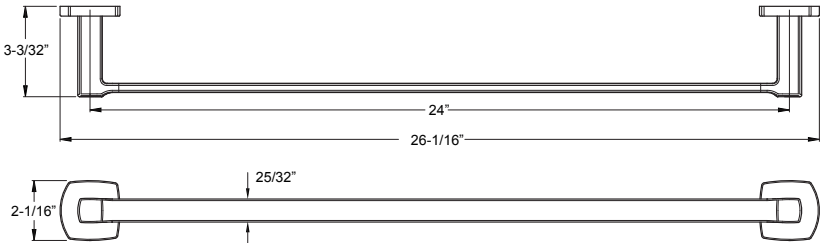

Towel Ring

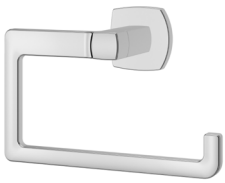

BRB-DA1C	Polished Chrome	3	$37
BRB-DA1K	Brushed Nickel	3	$40
BRB-DA1B	Matte Black	3	$44

Holes: • 1-Hole

Features:
- All Metal Construction
- Standard Mounting Brackets
- Concealed Screw Installation
- Mounting Hardware Included

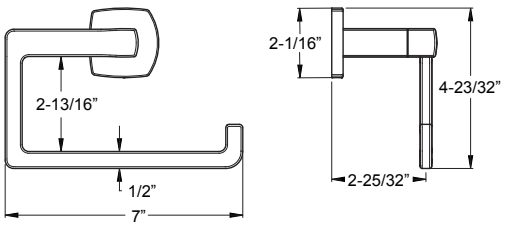

Paper Holder

Model	Finish	Case Qty	List Price
BPH-DA1C	Polished Chrome	3	$45
BPH-DA1K	Brushed Nickel	3	$50
BPH-DA1B	Matte Black	3	$54

Technical Info

Holes: • 2-Hole

Features:
- All Metal Construction
- Standard Mounting Brackets
- Concealed Screw Installation
- Mounting Hardware Included

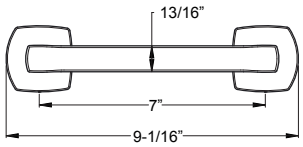

Robe Hook

BRH-DA1C	Polished Chrome	3	$28
BRH-DA1K	Brushed Nickel	3	$32
BRH-DA1B	Matte Black	3	$35

Holes: • 1-Hole

Features:
- All Metal Construction
- Standard Mounting Brackets
- Concealed Screw Installation
- Mounting Hardware Included

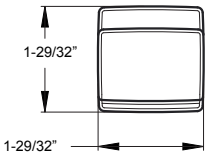

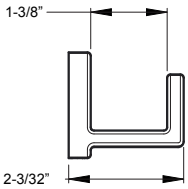

18" Towel Bar

Model	Finish	Case Qty	List Price
BTB-MG1C	Polished Chrome	3	$50
BTB-MG1K	Brushed Nickel	3	$55
BTB-MG1Y	Tuscan Bronze	3	$61

Technical Info

Holes: • 2-Hole

Features:
- All Metal Construction
- Standard Mounting Bracket
- Concealed Screw Installation
- Mounting Hardware Included

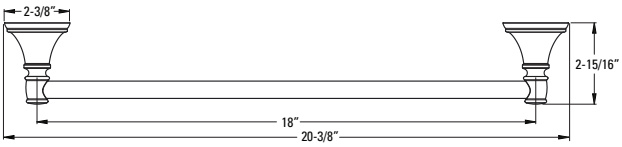

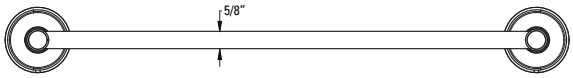

24" Towel Bar

BTB-MG2C	Polished Chrome	3	$52
BTB-MG2K	Brushed Nickel	3	$57
BTB-MG2Y	Tuscan Bronze	3	$63

Holes: • 2-Hole

Features:
- All Metal Construction
- Standard Mounting Bracket
- Concealed Screw Installation
- Mounting Hardware Included

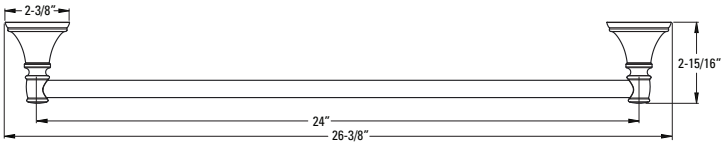

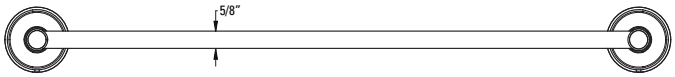

Towel Ring

BRB-MG1C	Polished Chrome	3	$36
BRB-MG1K	Brushed Nickel	3	$39
BRB-MG1Y	Tuscan Bronze	3	$43

Holes: • 1-Hole

Features:
- All Metal Construction
- Standard Mounting Bracket
- Concealed Screw Installation
- Mounting Hardware Included

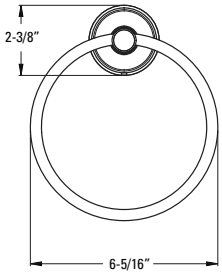

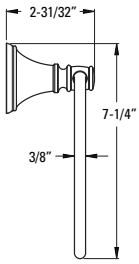

Paper Holder

Model	Finish	Case Qty	List Price
BPH-MG1C	Polished Chrome	3	$43
BPH-MG1K	Brushed Nickel	3	$48
BPH-MG1Y	Tuscan Bronze	3	$52

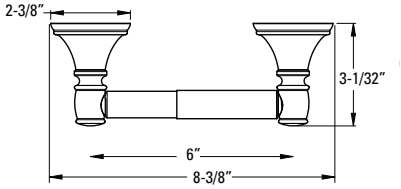

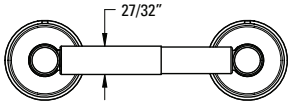

Technical Info

Holes: • 2-Hole

Features:
- All Metal Construction
- Standard Mounting Bracket
- Concealed Screw Installation
- Mounting Hardware Included

Robe Hook

Model	Finish	Case Qty	List Price
BRH-MG1C	Polished Chrome	3	$28
BRH-MG1K	Brushed Nickel	3	$32
BRH-MG1Y	Tuscan Bronze	3	$37

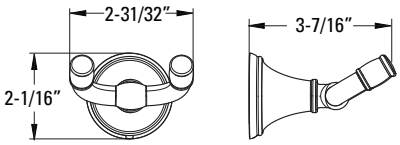

Holes: • 1-Hole

Features:
- All Metal Construction
- Standard Mounting Bracket
- Concealed Screw Installation
- Mounting Hardware Included

18" Towel Bar

Model	Finish	Case Qty	List Price
BTB-GL1C	Polished Chrome	3	$54
BTB-GL1K	Brushed Nickel	3	$65
BTB-GL1Y	Tuscan Bronze	3	$75

Technical Info

Holes: • 2-Hole

Features:
- All Metal Construction
- Standard Mounting Bracket
- Concealed Screw Installation
- Mounting Hardware Included

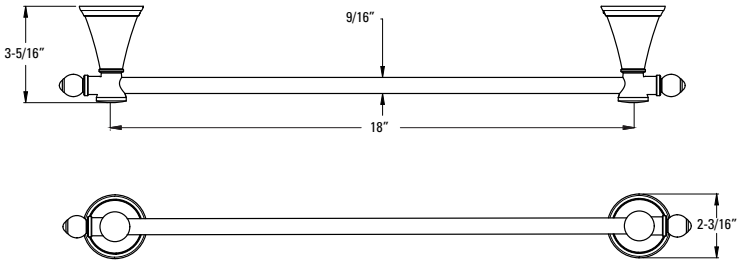

24" Towel Bar

BTB-GL2C	Polished Chrome	3	$59
BTB-GL2K	Brushed Nickel	3	$70
BTB-GL2Y	Tuscan Bronze	3	$80

Holes: • 2-Hole

Features:
- All Metal Construction
- Standard Mounting Bracket
- Concealed Screw Installation
- Mounting Hardware Included

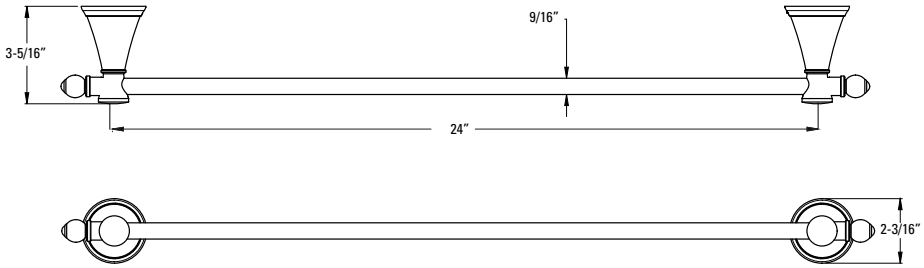

Towel Ring

BRB-GL1C	Polished Chrome	3	$38
BRB-GL1K	Brushed Nickel	3	$49
BRB-GL1Y	Tuscan Bronze	3	$59

Holes: • 1-Hole

Features:
- All Metal Construction
- Standard Mounting Bracket
- Concealed Screw Installation
- Mounting Hardware Included

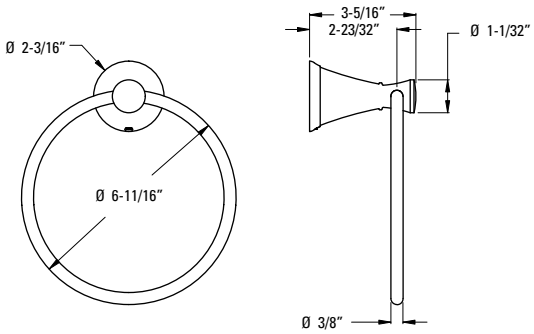

Paper Holder

Model	Finish	Case Qty	List Price
BPH-GL1C	Polished Chrome	3	$38
BPH-GL1K	Brushed Nickel	3	$49
BPH-GL1Y	Tuscan Bronze	3	$59

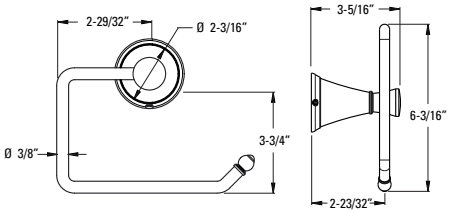

Technical Info

Holes: • 1-Hole

Features:
- All Metal Construction
- Standard Mounting Bracket
- Concealed Screw Installation
- Mounting Hardware Included

Robe Hook

BRH-GL1C	Polished Chrome	3	$22
BRH-GL1K	Brushed Nickel	3	$33
BRH-GL1Y	Tuscan Bronze	3	$44

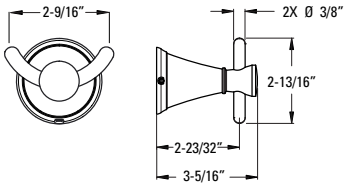

Holes: • 1-Hole

Features:
- All Metal Construction
- Standard Mounting Bracket
- Concealed Screw Installation
- Mounting Hardware Included

24" Towel Bar

Model	Finish	Case Qty	List Price
BTB-CB2C	Polished Chrome	4	$51
BTB-CB2K	Brushed Nickel	4	$76
BTB-CB2Y	Tuscan Bronze	4	$76

Technical Info

Holes: • 2-Hole

Features:
- All Metal Construction
- Superior Mounting Posts
- Concealed Screw Installation
- Mounting Hardware Included

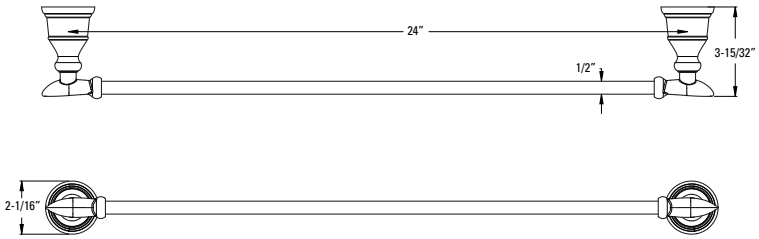

Towel Hook

BRB-CBØC	Polished Chrome	4	$36
BRB-CBØK	Brushed Nickel	4	$54
BRB-CBØY	Tuscan Bronze	4	$54

Holes: • 1-Hole

Features:
- All Metal Construction
- Superior Mounting Posts
- Concealed Screw Installation
- Mounting Hardware Included

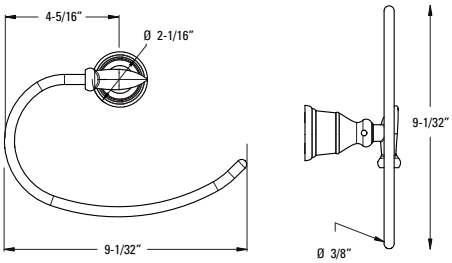

Paper Holder

BPH-CB1C	Polished Chrome	4	$38
BPH-CB1K	Brushed Nickel	4	$58
BPH-CB1Y	Tuscan Bronze	4	$58

Holes: • 1-Hole

Features:
- All Metal Construction
- Superior Mounting Posts
- Concealed Screw Installation
- Mounting Hardware Included

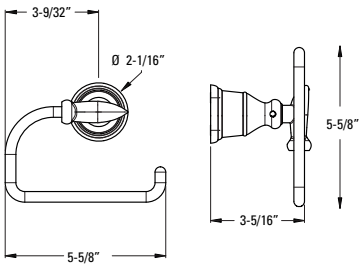

Robe Hook

Model	Finish	Case Qty	List Price
BRH-CBØC	Polished Chrome	4	$24
BRH-CBØK	Brushed Nickel	4	$33
BRH-CBØY	Tuscan Bronze	4	$33

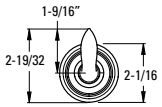

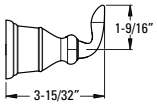

Technical Info

Holes: • 1-Hole

Features:
- All Metal Construction
- Superior Mounting Posts
- Concealed Screw Installation
- Mounting Hardware Included

24" Towel Bar

Model	Finish	Case Qty	List Price
BTB-R2CC	Polished Chrome	6	$31
BTB-R2KK	Brushed Nickel	6	$43
BTB-R2YY	Tuscan Bronze	6	$43

Technical Info

Holes: • 2-Hole

Features:
- All Metal Construction
- Standard Mounting Bracket
- Concealed Screw Installation
- Mounting Hardware Included

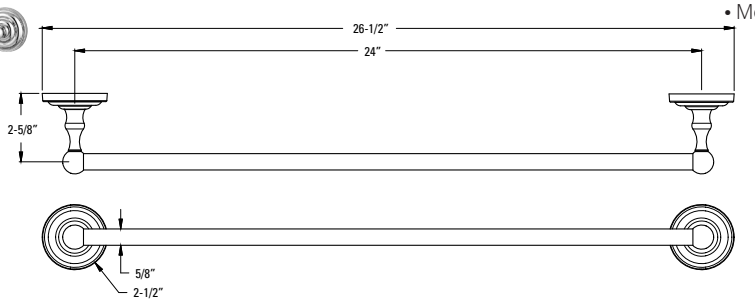

Towel Ring

Model	Finish	Case Qty	List Price
BRB-RØCC	Polished Chrome	6	$18
BRB-RØKK	Brushed Nickel	6	$25
BRB-RØYY	Tuscan Bronze	6	$25

Holes: • 1-Hole

Features:
- All Metal Construction
- Standard Mounting Bracket
- Concealed Screw Installation
- Mounting Hardware Included

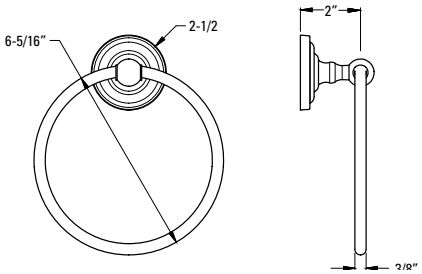

Paper Holder

Model	Finish	Case Qty	List Price
BPH-RØCC	Polished Chrome	6	$20
BPH-RØKK	Brushed Nickel	6	$27
BPH-RØYY	Tuscan Bronze	6	$27

Holes: • 2-Hole

Features:
- All Metal Construction
- Standard Mounting Bracket
- Concealed Screw Installation
- Mounting Hardware Included

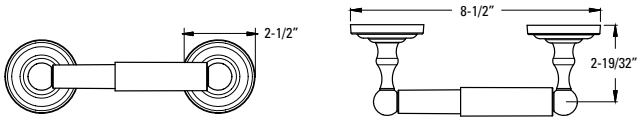

Robe Hook

Model	Finish	Case Qty	List Price
BRH-RØCC	Polished Chrome	6	$11
BRH-RØKK	Brushed Nickel	6	$12
BRH-RØYY	Tuscan Bronze	6	$12

Holes: • 1-Hole

Features:
- All Metal Construction
- Standard Mounting Bracket
- Concealed Screw Installation
- Mounting Hardware Included

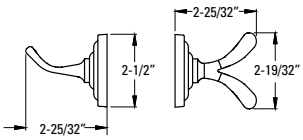

PFIRST SERIES & JOB PACKS

Pfirst Series 264
Job Pack 279

Pull-Down / Pull-Out Kitchen Faucet

Single Handle Pull-Down Kitchen Faucet

Model	Finish	Case Qty	List Price
G529-PF1C	Polished Chrome	3	$187
G529-PF1S	Stainless Steel	3	$207
G529-PF1Y	Tuscan Bronze	3	$228

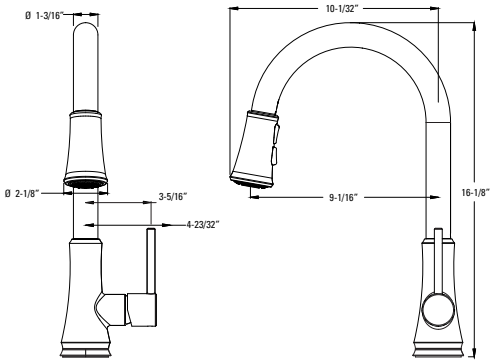

Technical Info

Holes: • 1 or 3-Hole 8" Installation

Features:
- Ceramic Disc Valve
- High Arc Swivel Spout
- Metal Lever Handle
- Three-Function Sprayhead: Stream, Spray, and Pause
- Single Post Mounting Ring and 3-Hole Deckplate
- Forward Only Handle Operation
- 1.8 gpm @ 60 psi

Single Handle Pull-Out Kitchen Faucet

G133-1ØCC	Polished Chrome	3	$135
G133-1ØWW	White	3	$135
G133-1ØSS	Stainless Steel	3	$156
G133-1ØYY	Tuscan Bronze	3	$182

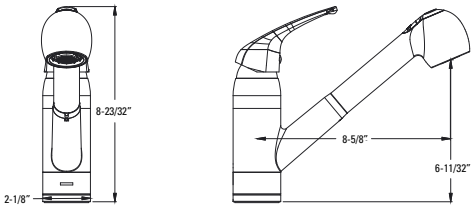

Holes: • 1 or 3-Hole 8" Installation

Features:
- Ceramic Disc Valve
- Metal Lever Handle
- Swivel Spout
- Two-Function Sprayhead: Stream and Spray
- Single Post Mounting Ring and 3-Hole Deckplate
- 38" Pull-Out Hose
- Order 941-372Ø for 1.5 gpm Aerator
- 1.8 gpm @ 60 psi

Single Control Kitchen Faucet

Single Handle Kitchen Faucet

Model	Finish	Case Qty	List Price
G134-5ØØØ	Polished Chrome	3	$104
G134-5ØØS	Stainless Steel	3	$171

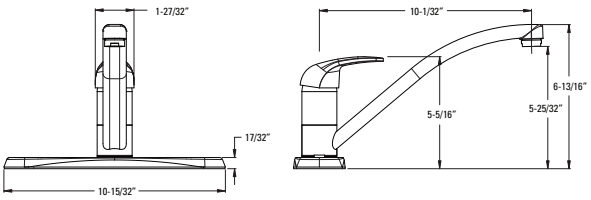

Technical Info

Holes: • 3-Hole 8" Installation

Features:
- Ceramic Disc Valve
- Metal Lever Handle
- Swivel Spout
- 1.8 gpm @ 60 psi

Single Handle Kitchen Faucet with Spray

G134-6ØØØ	Polished Chrome	3	$118
G134-6ØØS	Stainless Steel	3	$183

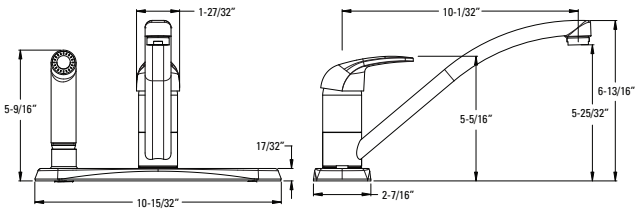

Holes: • 3-Hole 8" Installation

Features:
- Ceramic Disc Valve
- Metal Lever Handle
- Swivel Spout
- Matching Finish Sidespray
- 1.8 gpm @ 60 psi

CEC Compliant | Cal Green Compliant | NSF Lead-Free Certified | ADA Compliant | Accudock™

Single Handle Kitchen Faucet with Spray

Model	Finish	Case Qty	List Price
G134-7ØØØ	Polished Chrome	3	$128
G134-7ØØS	Stainless Steel	3	$183

Technical Info

Holes: • 4-Hole 8" Installation

Features:
- Ceramic Disc Valve
- Metal Lever Handle
- Swivel Spout
- Matching Finish Sidespray
- 1.8 gpm @ 60 psi

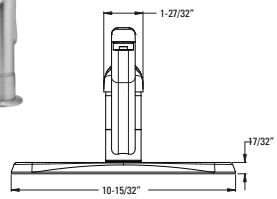

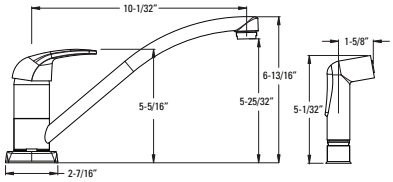

Single Handle Kitchen Faucet

G134-1444	Polished Chrome	3	$61
G134-144S	Stainless Steel	3	$86

Holes: • 3-Hole 8" Installation

Features:
- Stainless Steel Ball Valve
- Metal Lever Handle
- Swivel Spout
- 1.8 gpm @ 60 psi

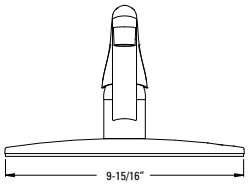

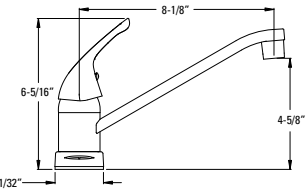

Single Handle Kitchen Faucet with Spray

G134-3444	Polished Chrome	3	$67

Holes: • 3-Hole 8" Installation

Features:
- Stainless Steel Ball Valve
- Metal Lever Handle
- Swivel Spout
- Matching Finish Sidespray
- 1.8 gpm @ 60 psi

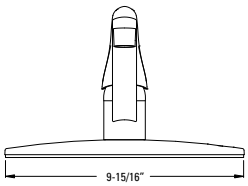

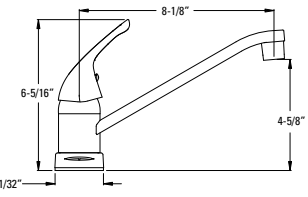

Single Handle Kitchen Faucet with Spray

G134-4444	Polished Chrome	3	$67
G134-444S	Stainless Steel	3	$96

Holes: • 4-Hole 8" Installation

Features:
- Stainless Steel Ball Valve
- Metal Lever Handle
- Swivel Spout
- Matching Finish Sidespray
- 1.8 gpm @ 60 psi

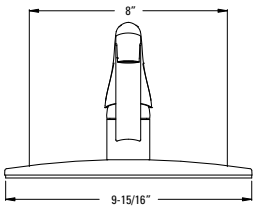

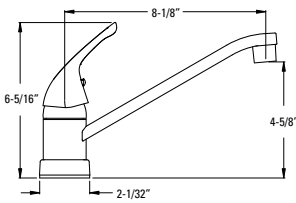

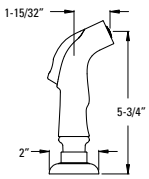

CEC Compliant | Cal Green Compliant | NSF Lead-Free Certified | ADA Compliant | Accudock™

Two-Handle Kitchen Faucet

	Model	Finish	Case Qty	List Price
Two-Handle Kitchen Faucet	G135-7ØØØ	Polished Chrome	3	$79
	G135-7ØØS	Stainless Steel	3	$88

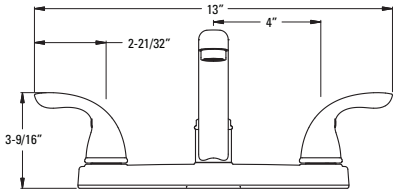

Technical Info

Holes: • 3-Hole 8" Installation

Features:
- Ceramic Disc Valves
- Metal Lever Handles
- Swivel Spout
- 1.8 gpm @ 60 psi

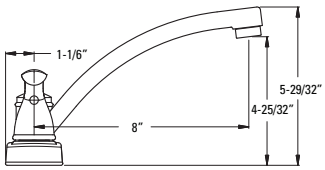

Two-Handle Kitchen Faucet with Spray	G135-8ØØØ	Polished Chrome	3	$91
	G135-8ØØS	Stainless Steel	3	$100

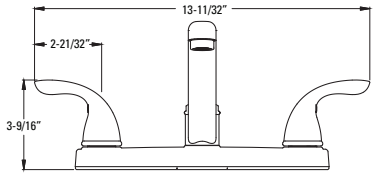

Holes: • 4-Hole 8" Installation

Features:
- Ceramic Disc Valves
- Metal Lever Handles
- Swivel Spout
- Matching Finish Sidespray
- 1.8 gpm @ 60 psi

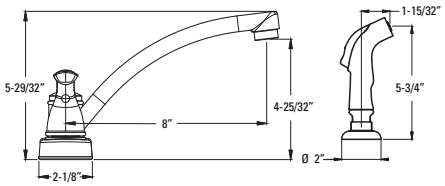

Two-Handle Kitchen Faucet	G135-1ØØØ	Polished Chrome	3	$50

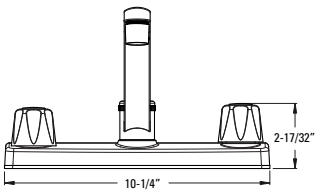

Holes: • 3-Hole 8" Installation

Features:
- Washerless Cartridges
- Swivel Spout
- 1.8 gpm @ 60 psi

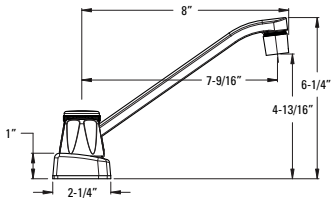

Two-Handle Kitchen Faucet with Spray	G135-4ØØØ	Polished Chrome	3	$61

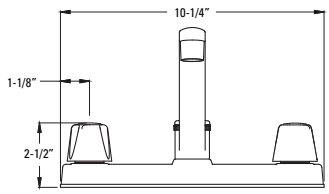

Holes: • 4-Hole 8" Installation

Features:
- Washerless Cartridges
- Swivel Spout
- White Sidespray
- 1.8 gpm @ 60 psi

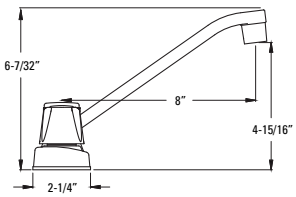

CEC Compliant | Cal Green Compliant | NSF Lead-Free Certified | ADA Compliant | Accudock™

	Model	Finish	Case Qty	List Price
Two-Handle Kitchen Faucet	G135-11ØØ	Polished Chrome	3	$50

Technical Info

Holes: • 3-Hole 8" Installation

Features:
- Washerless Cartridges
- Acrylic Handles
- Swivel Spout
- 1.8 gpm @ 60 psi

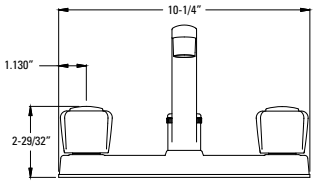

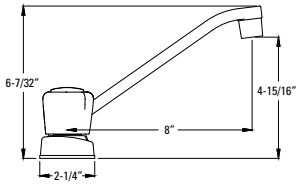

Two-Handle Kitchen Faucet with Spray	G135-41ØØ	Polished Chrome	3	$61

Holes: • 4-Hole 8" Installation

Features:
- Washerless Cartridges
- Acrylic Handles
- Swivel Spout
- White Sidespray
- 1.8 gpm @ 60 psi

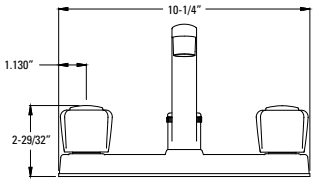

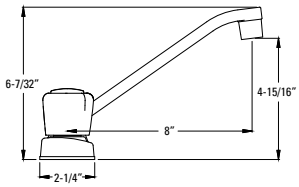

Two-Handle Kitchen Faucet	G135-2ØØØ	Polished Chrome	3	$53

Holes: • 3-Hole 8" Installation

Features:
- Washerless Cartridges
- Blade Handles
- Swivel Spout
- 1.8 gpm @ 60 psi

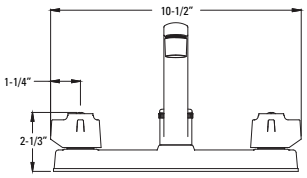

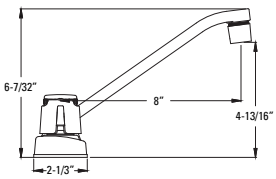

Two-Handle Kitchen Faucet with Spray	G135-5ØØØ	Polished Chrome	3	$64

Holes: • 4-Hole 8" Installation

Features:
- Washerless Cartridges
- Blade Handles
- Swivel Spout
- White Sidespray
- 1.8 gpm @ 60 psi

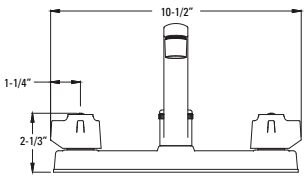

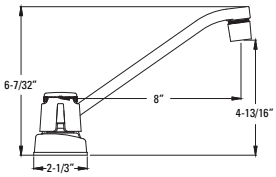

CEC Compliant | Cal Green Compliant | NSF Lead-Free Certified | ADA Compliant | Accudock™

Two-Handle Kitchen Faucet

	Model	Finish	Case Qty	List Price
Two-Handle High Arc Kitchen Faucet	G136-2ØØØ	Polished Chrome	3	$91
	G136-2ØØS	Stainless Steel	3	$109

Technical Info

Holes: • 3-Hole 8" Installation

Features:
- Ceramic Disc Valves
- Metal Lever Handles
- High Arc Swivel Spout
- 1.8 gpm @ 60 psi

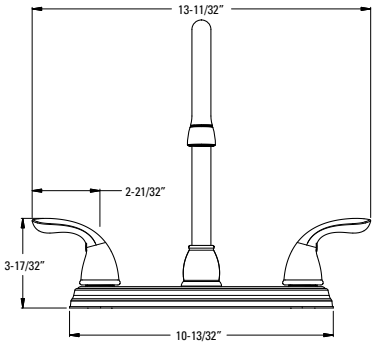

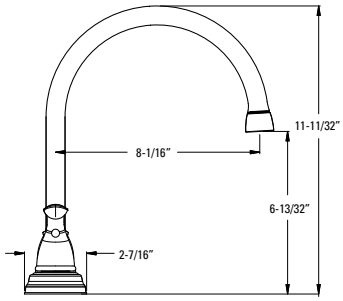

	Model	Finish	Case Qty	List Price
Two-Handle High Arc Kitchen Faucet with Spray	G136-5ØØØ	Polished Chrome	3	$102
	G136-5ØØS	Stainless Steel	3	$120
	G136-5ØØY	Tuscan Bronze	3	$145

Holes: • 4-Hole 8" Installation

Features:
- Ceramic Disc Valves
- Metal Lever Handles
- High Arc Swivel Spout
- Matching Finish Sidespray
- 1.8 gpm @ 60 psi

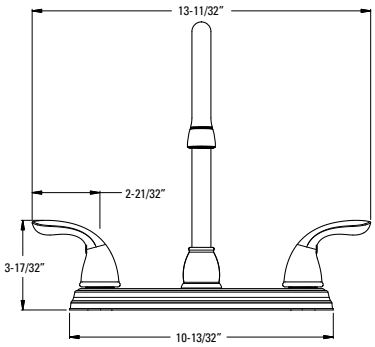

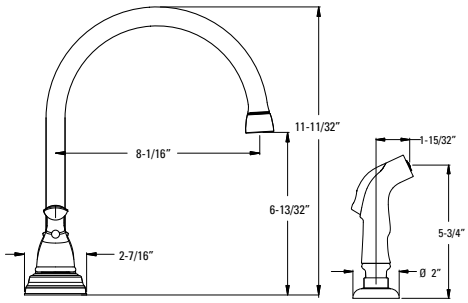

Wall Mount Kitchen Faucet

	Model	Finish	Case Qty	List Price
Wall Mount Kitchen Faucet	G127-1ØØØ	Polished Chrome	3	$87

Technical Info

Holes: • 2-Hole 6 3/4 - 9 1/8" Installation

Features:
- Compression Valves
- Metal Blade Handles
- 1.8 gpm @ 60 psi

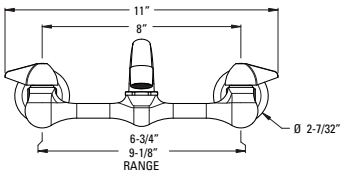

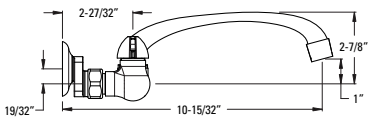

CEC Compliant | Cal Green Compliant | NSF Lead-Free Certified | ADA Compliant | Accudock™

Bar / Laundry Faucet

	Model	Finish	Case Qty	List Price
Bar/Ent. Faucet	G171-4ØØØ	Polished Chrome	3	$38

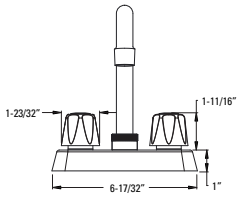

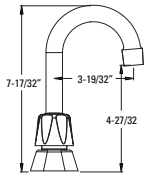

Technical Info

Holes: • 2-Hole 4" Installation

Features:
- Washerless Cartridges
- Metal Handles
- 1.8 gpm @ 60 psi

Utility/Laundry Faucet	171-1ØØØ	Polished Chrome	3	$50

Holes: • 2-Hole 4" Installation

Features:
- Washerless Cartridges
- Metal Handles
- 2.2 gpm @ 60 psi

Utility/Laundry Faucet	171-2ØØØ	Polished Chrome	3	$56

Holes: • 2-Hole 4" Installation

Features:
- Washerless Cartridges
- Metal Handles
- 3/4" Hose End
- 2.2 gpm @ 60 psi

Single Control Lavatory Faucets

Pfirst Modern	Model	Finish	Case Qty	List Price
Single Control Lavatory	LG142-Ø6ØØ	Polished Chrome	3	$124
	LG142-Ø6ØK	Brushed Nickel	3	$165

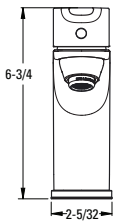

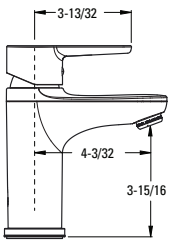

Technical Info

Holes: • 1 or 3-Hole 4" Installation

Features:
- Ceramic Disc Valve
- Metal Lever Handles
- High Temperature Limit Stop
- Optional Deck Plate. Order 961-217*
- Push & Seal Drain Included
- 941-621*& 972-Ø22* for Optional Metal Drain
- 1.2 gpm @ 60 psi

CEC Compliant | Cal Green Compliant | Meets EPA WaterSense℠ Standards | NSF Lead-Free Certified | ADA Compliant | UltraSeal™ | SecurePfit™

Single Control Lavatory Faucets

Single Control Lavatory

Model	Finish	Case Qty	List Price
LG142-8ØØØ	Polished Chrome	3	$97
LG142-8ØØK	Brushed Nickel	3	$122
LG142-8ØØY	Tuscan Bronze	3	$149

Technical Info

Holes: • 3-Hole 4" Installation

Features:
- Stainless Steel Ball Valve
- Metal Lever Handle
- All Metal Pop-Up
- 1.2 gpm @ 60 psi

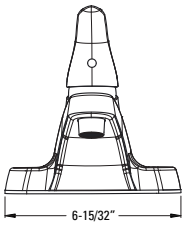

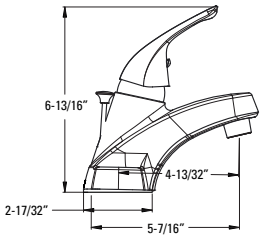

Single Control Lavatory

LG142-7ØØØ	Polished Chrome	3	$83

Holes: • 3-Hole 4" Installation

Features:
- Stainless Steel Ball Valve
- Metal Lever Handle
- 50/50 Pop-Up
- 1.2 gpm @ 60 psi

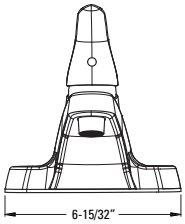

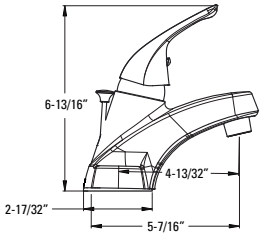

Single Control Lavatory

LG142-6ØØØ	Polished Chrome	3	$62
LG142-6ØØK	Brushed Nickel	3	$94

Holes: • 3-Hole 4" Installation

Features:
- Stainless Steel Ball Valve
- Metal Lever Handle
- All Metal Pop-Up
- 1.2 gpm @ 60 psi

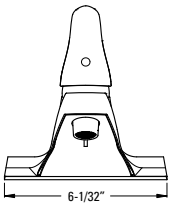

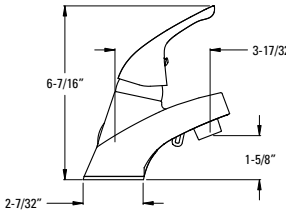

Single Control Lavatory

LG142-5ØØØ	Polished Chrome	3	$48

Holes: • 3-Hole 4" Installation

Features:
- Stainless Steel Ball Valve
- Metal Lever Handle
- Less Drain Assembly
- Cap for Pop-Up Rod Hole
- 1.2 gpm @ 60 psi

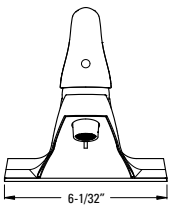

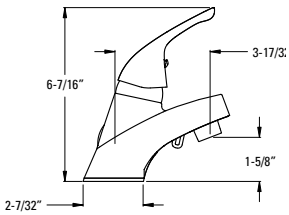

CEC Compliant | Cal Green Compliant | Meets EPA WaterSense℠ Standards | NSF Lead-Free Certified | ADA Compliant | UltraSeal™ | SecurePfit™

4" Centerset Lavatory

Model	Finish	Case Qty	List Price
LG148-7ØØØ	Polished Chrome	3	$109
LG148-7ØØK	Brushed Nickel	3	$128
LG148-7ØØY	Tuscan Bronze	3	$141

Technical Info

Holes: • 3-Hole 4" Installation

Features:
- Ceramic Disc Valves
- Metal Lever Handles
- High Arc Fixed Spout
- All Metal Pop-Up
- 1.2 gpm @ 60 psi

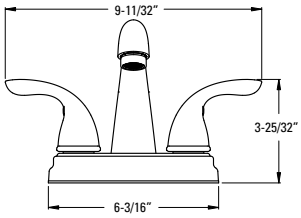

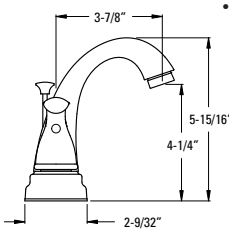

4" Centerset Lavatory

LG143-61ØØ	Polished Chrome	3	$84
LG143-61ØK	Brushed Nickel	3	$100
LG143-61ØY	Tuscan Bronze	3	$132

Holes: • 3-Hole 4" Installation

Features:
- Washerless Cartridges
- Metal Lever Handles
- All Metal Pop-Up
- 1.2 gpm @ 60 psi

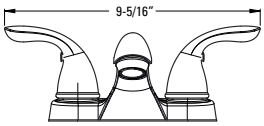

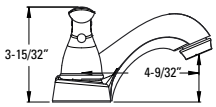

4" Centerset Lavatory

Model	Finish	Case Qty	List Price
LG143-51ØØ	Polished Chrome	3	$71

Technical Info

Holes: • 3-Hole 4" Installation

Features:
- Washerless Cartridges
- Metal Lever Handles
- Less Drain Assembly
- Cap for Pop-Up Rod Hole
- 1.2 gpm @ 60 psi

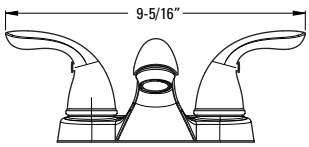

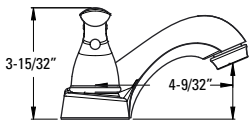

4" Centerset Lavatory

LG143-6ØØØ	Polished Chrome	3	$52

Holes: • 3-Hole 4" Installation

Features:
- Washerless Cartridge
- All Metal Pop-Up
- 1.2 gpm @ 60 psi

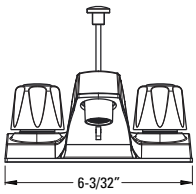

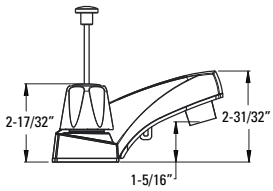

CEC Compliant | Cal Green Compliant | Meets EPA WaterSense℠ Standards | NSF Lead-Free Certified | ADA Compliant | UltraSeal™ | SecurePfit™

4" Centerset Lavatory Faucets

	Model	Finish	Case Qty	List Price
4" Centerset Lavatory	LG143-5ØØØ	Polished Chrome	3	$39

Technical Info

Holes: • 3-Hole 4" Installation

Features:
- Washerless Cartridges
- Less Drain Assembly
- Cap for Pop-Up Rod Hole
- 1.2 gpm @ 60 psi

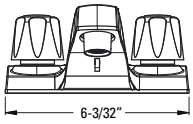

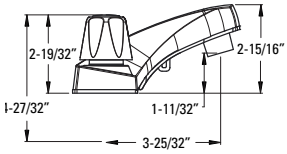

	Model	Finish	Case Qty	List Price
4" Centerset Lavatory	LG143-6ØØ2	Polished Chrome	3	$52

Holes: • 3-Hole 4" Installation

Features:
- Washerless Cartridges
- Acrylic Handles
- All Metal Pop-Up
- 1.2 gpm @ 60 psi

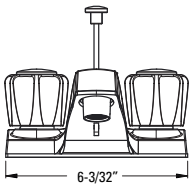

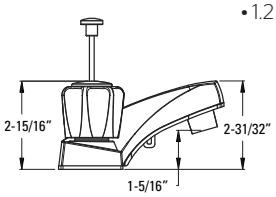

	Model	Finish	Case Qty	List Price
4" Centerset Lavatory	LG143-5ØØ2	Polished Chrome	3	$39

Holes: • 3-Hole 4" Installation

Features:
- Washerless Cartridges
- Acrylic Handles
- Less Drain Assembly
- Cap for Pop-Up Rod Hole
- 1.2 gpm @ 60 psi

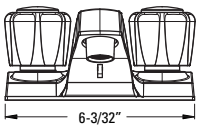

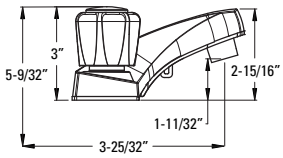

	Model	Finish	Case Qty	List Price
4" Centerset Lavatory	LG143-6ØØ5	Polished Chrome	3	$54

Holes: • 3-Hole 4" Installation

Features:
- Washerless Cartridges
- Small Blade Handles
- All Metal Pop-Up
- 1.2 gpm @ 60 psi

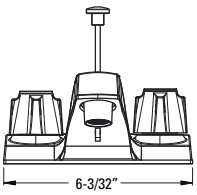

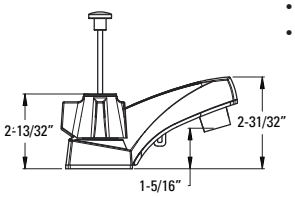

CEC Compliant | Cal Green Compliant | Meets EPA WaterSense℠ Standards | NSF Lead-Free Certified | ADA Compliant | UltraSeal™ | SecurePfit™

8" Widespread Lavatory

Model	Finish	Case Qty	List Price
LG149-61ØØ	Polished Chrome	3	$158
LG149-61ØK	Brushed Nickel	3	$196
LG149-61ØY	Tuscan Bronze	3	$235

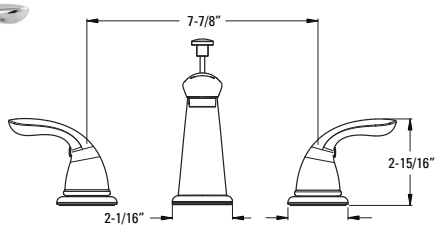

Technical Info

Holes: • 3-Hole 8"-15" Installation

Features:
- Ceramic Disc Valves
- Metal Lever Handles
- All Metal Pop-Up
- Quick Connect Hose Assembly
- 1.2 gpm @ 60 psi

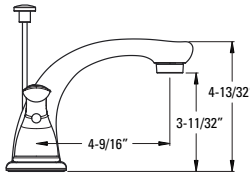

8" Widespread Lavatory

LG149-6ØØØ	Polished Chrome	3	$120

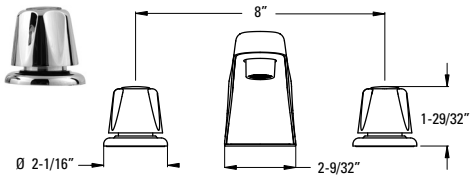

Holes: • 3-Hole 8"-15" Installation

Features:
- Ceramic Disc Valves
- All Metal Pop-Up
- Quick Connect Hose Assembly
- 1.2 gpm @ 60 psi

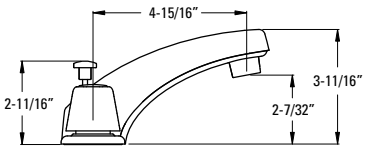

CEC Compliant | Cal Green Compliant | Meets EPA WaterSense℠ Standards | NSF Lead-Free Certified | ADA Compliant | UltraSeal™ | SecurePfit™

Tub Fillers

Roman Tub Trim

Model	Finish	Case Qty	List Price
1T6-51ØØ	Polished Chrome	3	$127
1T6-51ØK	Brushed Nickel	3	$167
1T6-51ØY	Tuscan Bronze	3	$199

Technical Info

Holes: • 3-Hole

Features: • Ceramic Disc Valves
• Metal Lever Handles

Must Order ØX6-Ø5ØR or ØX6-15ØR Rough In Valve Separately. See Valve Section.

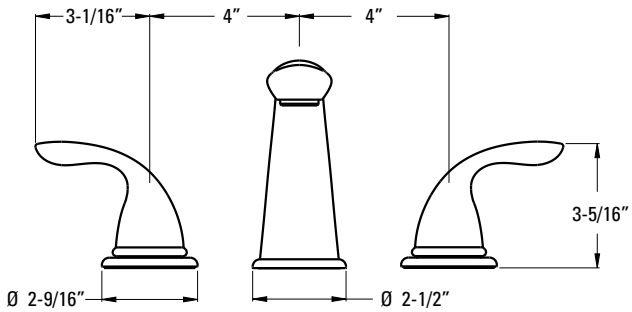

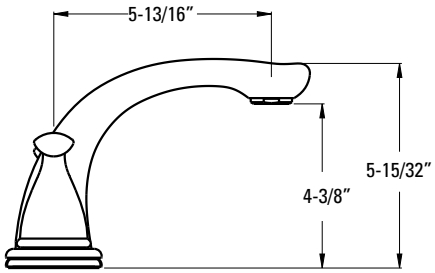

CEC Compliant | Cal Green Compliant | Meets EPA WaterSense℠ Standards | NSF Lead-Free Certified | ADA Compliant | UltraSeal™ | SecurePfit™

Pfirst Modern™
Pressure Balance Tub & Shower Trim

Model	Finish	Case Qty	List Price
R89-Ø7ØØ	Polished Chrome	3	$73
R89-Ø7ØK	Brushed Nickel	3	$99

Technical Info

Features:
- Quick Trim™ Wall Flange
- Metal Lever Handle(s)
- Hot/Cold Indicator
- 5" IP & Quick Connect Metal Diverted Tub Spout
- Must Order Showerhead Separately
- Optional 6.5" IP & Quick Connect Metal Tub Spout Order 92Ø-185*

Must Order Pressure Balance Rough in Valve Separately. See Valve Section.

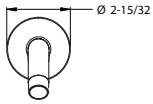

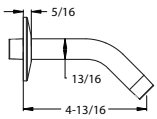

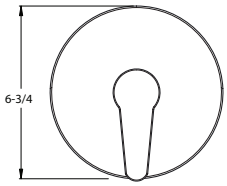

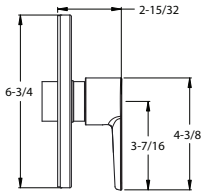

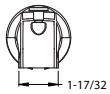

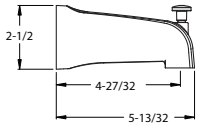

Pfirst Modern™
Pressure Balance Shower Trim

R89-Ø6ØØ	Polished Chrome	3	$50
R89-Ø6ØK	Brushed Nickel	3	$70

Features:
- Quick Trim™ Wall Flange
- Metal Lever Handle(s)
- Hot/Cold Indicator
- Must Order Showerhead Separately

Must Order Pressure Balance Rough in Valve Separately. See Valve Section.

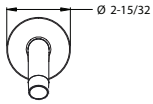

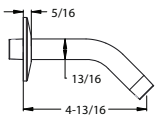

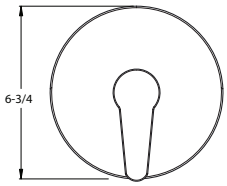

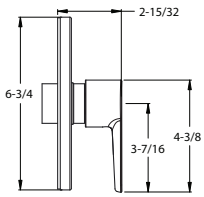

CEC Compliant | Cal Green Compliant | Meets EPA WaterSense℠ Standards | NSF Lead-Free Certified | ADA Compliant | UltraSeal™ | SecurePfit™

Pfirst Modern™
Pressure Balance Valve
Only Trim

Model	Finish	Case Qty	List Price
R89-Ø4ØØ	Polished Chrome	3	$41
R89-Ø4ØK	Brushed Nickel	3	$47

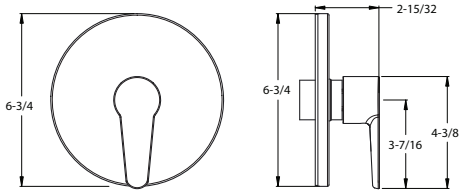

Technical Info

Features:
- Quick Trim™ Wall Flange
- Metal Lever Handle
- Hot/Cold Indicator

Must Order Pressure Balance Rough in Valve Separately. See Valve Section.

Pfirst Modern™
Job Pack Showerhead

J15-Ø6ØC	Polished Chrome	12	$15
J15-Ø6ØK	Brushed Nickel	12	$25

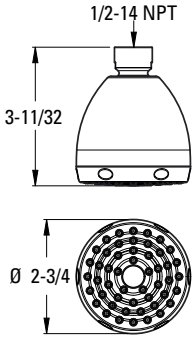

Features:
- Single Function
- JX = Job Pack Quantity Ships in Master Carton of 12
- Order 941-Ø55 for 1.5 gpm Showerhead Insert
- Showerhead 1.8 gpm @ 80 psi

Pfirst Modern™
Job Pack Showerhead

J15-Ø7ØC	Polished Chrome	12	$25
J15-Ø7ØK	Brushed Nickel	12	$36

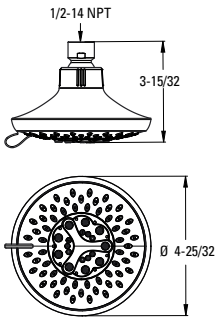

5

CEC Compliant | Cal Green Compliant | Meets EPA WaterSense℠ Standards | NSF Lead-Free Certified | ADA Compliant | UltraSeal™ | SecurePfit™

Pressure Balance Tub & Shower Trim

Model	Finish	Case Qty	List Price
LG89-Ø3ØØ	Polished Chrome	3	$45
LG89-Ø3ØK	Stainless Steel	3	$88
LG89-Ø3ØY	Tuscan Bronze	3	$138

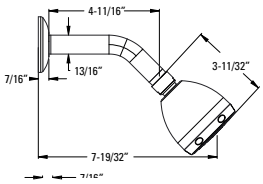

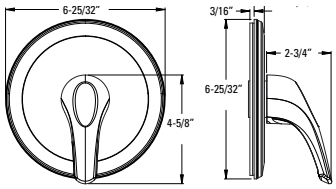

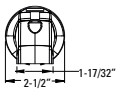

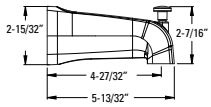

Features:
- Quick Trim™ Wall Flange
- Metal Lever Handle
- Hot/Cold Indicator
- Bell Showerhead
- Easy To Clean Spray Nozzles
- Quick Connect Diverter Tub Spout
- Order 941-Ø55Ø for 1.5 gpm Showerhead Insert
- Showerhead 1.8 gpm @ 80 psi

Must Order Pressure Balance Rough in Valve Separately. See Valve Section.

Pressure Balance Shower Trim

LG89-Ø2ØØ	Polished Chrome	3	$37
LG89-Ø2ØK	Stainless Steel	3	$77
LG89-Ø2ØY	Tuscan Bronze	3	$110

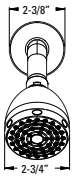

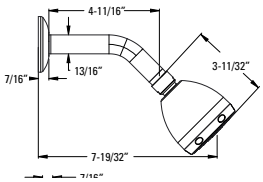

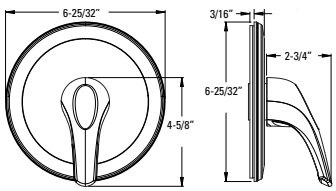

Features:
- Quick Trim™ Wall Flange
- Metal Lever Handle
- Hot/Cold Indicator
- Bell Showerhead
- Easy To Clean Spray Nozzles
- Order 941-Ø55Ø for 1.5 gpm Showerhead Insert
- Showerhead 1.8 gpm @ 80 psi

Must Order Pressure Balance Rough in Valve Separately. See Valve Section.

Pressure Balance Valve Only Trim

R89-Ø1ØØ	Polished Chrome	3	$37

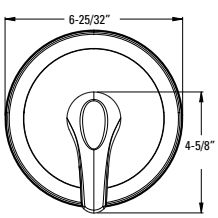

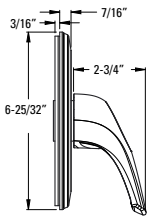

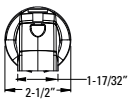

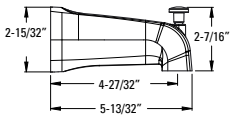

Features:
- Quick Trim™ Wall Flange
- Metal Lever Handle
- Hot/Cold Indicator
- Quick Connect Metal Non-Diverting Tub Spout

Must Order Pressure Balance Rough in Valve Separately. See Valve Section.

CEC Compliant | Cal Green Compliant | Meets EPA WaterSense℠ Standards | NSF Lead-Free Certified | ADA Compliant | UltraSeal™ | SecurePfit™

Pfirst Series® - Accessories

24" Towel Bar

Model	Finish	Case Qty	List Price
BTB-R2CC	Polished Chrome	6	$31
BTB-R2KK	Brushed Nickel	6	$43
BTB-R2YY	Tuscan Bronze	6	$43

Technical Info

Holes: • 2-Hole

Features:
- All Metal Construction
- Standard Mounting Bracket
- Concealed Screw Installation
- Mounting Hardware Included

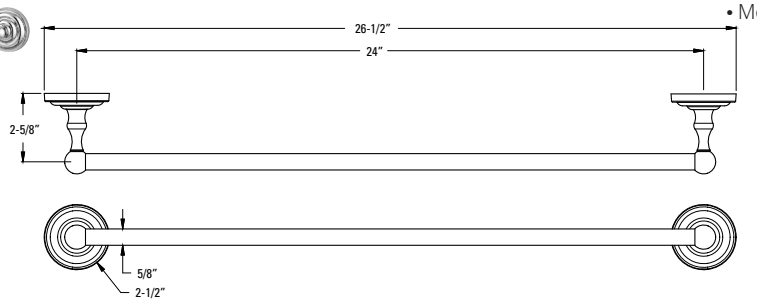

Towel Ring

BRB-RØCC	Polished Chrome	6	$18
BRB-RØKK	Brushed Nickel	6	$25
BRB-RØYY	Tuscan Bronze	6	$25

Holes: • 1-Hole

Features:
- All Metal Construction
- Standard Mounting Bracket
- Concealed Screw Installation
- Mounting Hardware Included

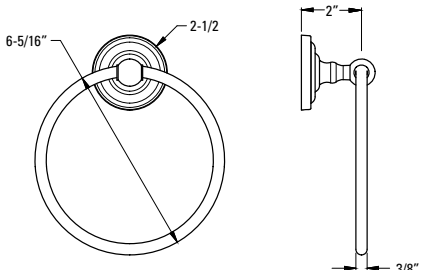

Paper Holder

BPH-RØCC	Polished Chrome	6	$20
BPH-RØKK	Brushed Nickel	6	$27
BPH-RØYY	Tuscan Bronze	6	$27

Holes: • 2-Hole

Features:
- All Metal Construction
- Standard Mounting Bracket
- Concealed Screw Installation
- Mounting Hardware Included

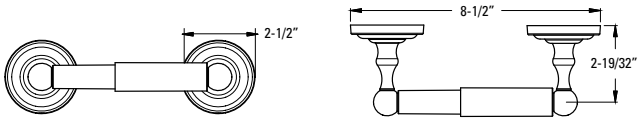

Robe Hook

BRH-RØCC	Polished Chrome	6	$11
BRH-RØKK	Brushed Nickel	6	$12
BRH-RØYY	Tuscan Bronze	6	$12

Holes: • 1-Hole

Features:
- All Metal Construction
- Standard Mounting Bracket
- Concealed Screw Installation
- Mounting Hardware Included

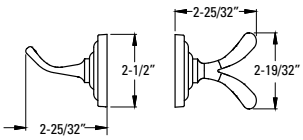

Job Pack Price Guide & Packaging

Tub & Shower · Roman Tub · Showerhead

ON-SITE INSTALLATION MADE EASY

Pfister Job Packs are designed and packaged with the new work contractor's needs in mind. Our faucets are packaged in quantities suited to multiple installations on the job site.

- Includes Roman Tub Valves, Shower Valves & Showerheads.
- Our packaging is secure. It comes in a master carton with separators and unit dividers that meet the needs, the installer, in new work situations.
- Best of all, you get great pricing along with the superior benefits of Pfister ceramic disc technology.
- Pfister extends the Pforever Warranty® to all Job Pack products.

CERAMIC DISC VALVING

Ceramic disc valves last eight times longer than the industry standard. They are the ultimate in durability and reliability.

Tests show that our ceramic disc valves operate flawlessly for more than 4 million cycles. That is the equivalent of 80 years of normal use, or 8 times the industry standard. Ceramic is the hardest material on earth next to diamonds, withstanding even the harshest of water conditions.

Why is this so important to you? Because the biggest reason for call-backs is leaks. Our ceramic disc valving is guaranteed to be leak-free for life. Homeowners love it because the self-lubricating ceramic discs provide easier operation.

PermaBalance™
Tub & Shower Rough Valve

Model	Description	Case Qty	List Price
JX8-31ØA	Job Pack	12	$82
JX8-34ØA	Job Pack w/Stops	12	$110

Retro-Fittable Cartridge Fits Into Existing Valve Bodies Metal Stem

Technical Info

Features:
- Rough-In Valve and Pressure Balance Cartridge
- Ceramic Disc Valve(s)
- 1/2" Universal Inlets to Accept 1/2" Copper, 1/2" Iron Pipe, PEX or CPVC Adapters
- Back-to-Back Compatible
- JX= Job Pack Quantity Ships in Master Carton of 12
- 34ØA= with Screwdriver Stops
- Extension Kits See Extension Kit Section
- 5.5 gpm @ 60 psi

PermaBalance™
Tub & Shower Rough
PEX Ready

JX8-31ØP	Job Pack	12	$82
JX8-34ØP	Job Pack w/Stops	12	$110

Retro-Fittable Cartridge Fits Into Existing Valve Bodies Metal Stem

This Valve Complies With ASTFM F1807 and CSA B137.5 and Is to Be Used with The SDR9 PEX Tubing Using the Crimp Ring System of Joining. It Cannot Be Used with Cold Expansion Fittings and Joining System.

Features:
- Rough-In Valve and Pressure Balance Cartridge
- Ceramic Disc Valve(s)
- 1/2" PEX Inlets and Universal Male Threaded Outlets
- Back-to-Back Compatible
- JX= Job Pack Quantity Ships In Master Carton of 12
- 34ØP= With Screwdriver Stops
- Extension Kits See Extension Kit Section
- 5.5 gpm @ 60 psi

Job Packs

PermaBalance™
Tub & Shower Rough

Model	Description	Case Qty	List Price
JX8-11ØA	Job Pack	12	$82
JX8-14ØA	Job Pack w/Stops	12	$99

Retro-Fittable Cartridge Fits Into Existing Valve Bodies Metal Stem

Technical Info

Features:
- Rough-In Valve and Pressure Balance Cartridge
- Ceramic Disc Valve(s)
- 1/2" Female IP Inlets and Outlets to Accept PEX or CPVC Fittings
- Back-to-Back Compatible
- JX= Job Pack Quantity Ships In Master Carton of 12
- 14ØA= with Screwdriver Stops
- Extension Kits See Extension Kit Section
- 5.5 gpm @ 60 psi

PermaBalance™
Tub & Shower Rough
PEX Ready Valve

JX8-41ØP	Job Pack	12	$82
JX8-44ØP	Job Pack w/Stops	12	$110

1/2" Cold Expansion PEX Inlets

Retro-Fittable Cartridge Fits Into Existing Valve Bodies Metal Stem

Features:
- Rough-In Valve and Pressure Balance Cartridge
- Ceramic Disc Valve(s)
- 1/2" PEX Inlets and Universal Male Threaded Outlets
- Back-to-Back Compatible
- JX= Job Pack Quantity Ships in Master Carton of 12
- 44ØP= With Screwdriver Stops
- Extension Kits See Extension Kit Section
- 5.5 gpm @ 60 psi

PermaBalance™
Tub & Shower Rough
PEX Ready

JV8-31ØP	Job Pack	12	$56

Lower Profile Casting Integrated Tie-Downs

This Valve Complies With ASTFM F1807 and Csa B137.5 and Is to Be Used with The SDR9 PEX Tubing Using the Crimp Ring System of Joining. It Cannot Be Used with Cold Expansion Fittings and Joining System.

Features:
- Valve Body Only
- Accepts 974-321Ø Pressure Balance Cartridge or TX9-ØØØ1 Thermostatic Cartridge
- 1/2" PEX Inlets and Universal Male Threaded Outlets
- Test Plug
- Back-to-Back Compatible
- JX= Job Pack Quantity Ships in Master Carton of 12
- 5.5 gpm @ 60 psi

PermaBalance™
Tub & Shower Rough
PEX Ready Valve

JV8-41ØP	Job Pack	12	$54
JV8-44ØP	Job Pack w/Stops	12	$84

1/2" Cold Expansion PEX Inlets

Features:
- Valve Body Only
- Accepts 974-321Ø Pressure Balance Cartridge or TX9-ØØØ1 Thermostatic Cartridge
- 1/2" PEX Inlets and Universal Male Threaded Outlets
- Test Plug
- Back-to-Back Compatible
- JX= Job Pack Quantity Ships in Master Carton of 12
- 5.5 gpm @ 60 psi

Universal
Roman Tub Valve Rough

Model	Description	Case Qty	List Price
JX6-Ø5ØR	Job Pack	12	$114

Technical Info

Holes: • 3-Hole 10" Installation

Dims: • 2 3/4" Max Deck Thickness

Features:
- Rough-In Valve Body & Cartridge
- Ceramic Disc Valve(s)
- 10" Fixed Valve Body
- Thin and Thick Deck Mounting Hardware
- Order 974-375 1" Extension Kit if Deck Thickness Exceeds 2 3/4", Requires 1 Kit Per Handle, Stackable to Reach Desired Height up to 4 1/2"
- Order 975-Ø15 Long Spout Shank if Deck Thickness Exceeds 2 3/4", Increases Max. Deck Thickness to 4 1/2"
- 1/2" Sweat Inlets
- JX= Job Pack Quantity Ships in Master Carton of 12
- 15 - 18 gpm @ 60 psi

Universal
Adjustable Roman Tub Valve Rough

JX6-15ØR	Job Pack	12	$103

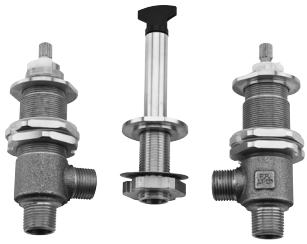

Holes: • 3-Hole Installation

Dims: • 2 3/4" Max Deck Thickness

Features:
- Rough-In Valve Body & Cartridge
- Ceramic Disc Valve(s)
- Adjustable Installation
- Thin and Thick Deck Mount Hardware
- Order 974-375 1" Extension Kit if Deck Thickness Exceeds 2 3/4", Requires 1 Kit Per Handle, Stackable to Reach Desired Height up to 4 1/2"
- Order 975-Ø15 Long Spout Shank if Deck Thickness Exceeds 2 3/4", Increases Max. Deck Thickness to 4 1/2"
- 1/2" Universal IP Male Threaded Inlets and 1/2" IPS Male Threaded Outlets
- JX= Job Pack Quantity Ships in Master Carton of 12
- 15 - 18 gpm @ 60 psi

Pfirst Modern™
Job Pack Showerhead

J15-Ø6ØC	Polished Chrome	12	$15
J15-Ø6ØK	Brushed Nickel	12	$25

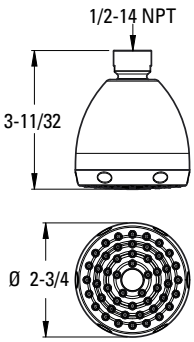

Features:
- Single Function
- JX = Job Pack Quantity Ships in Master Carton of 12
- Order 941-Ø55 for 1.5 gpm Showerhead Insert
- Showerhead 1.8 gpm @ 80 psi

Pfirst Modern™
Job Pack Showerhead

J15-Ø7ØC	Polished Chrome	12	$25
J15-Ø7ØK	Brushed Nickel	12	$36

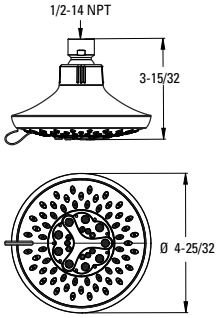

Features:
- Multi Function
- JX = Job Pack Quantity Ships in Master Carton of 12
- Showerhead 1.8 gpm @ 80 psi

CEC Compliant | Cal Green Compliant | Meets EPA WaterSense℠ Standards | NSF Lead-Free Certified | ADA Compliant | UltraSeal™ | SecurePfit™

VALVES

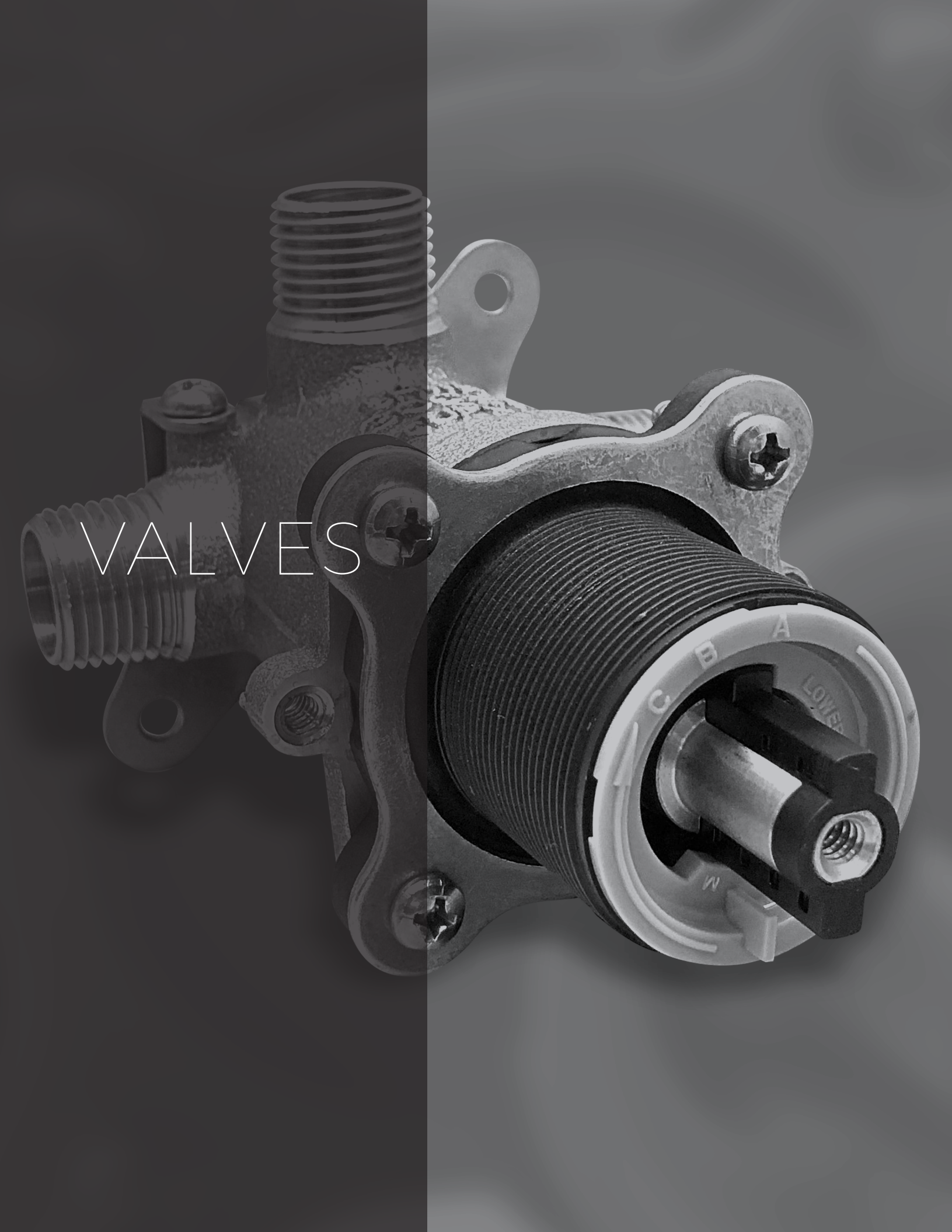

How to Order a Wall Mount Faucet

Rough-In
Choose the desired rough-in valve

+

Trim
Select trim

=

Complete Faucet

	Model	Description	Case Qty	List Price
Universal Wall Mount Valve Rough	LØW8-Ø1ØØ	N/A	10	$189

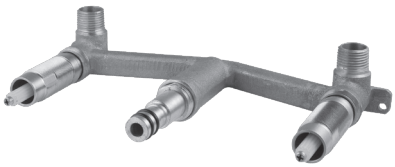

Technical Info

Holes:
- 3-Hole 8" Installation

Features:
- Ceramic Disc Valve
- 11/16" Installation Depth Adjustability
- 8" Fixed Body
- 1.2 gpm @ 60 psi

Must Order Trim Separately

How to Order a Pressure Balance Tub & Shower

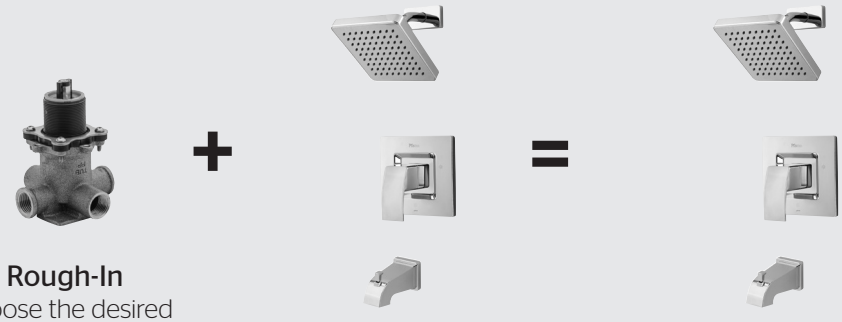

Rough-In
Choose the desired rough-in valve

Trim
Select trim

Complete Tub & Shower

PermaBalance™
Tub & Shower Rough Valve

Model	Description	Case Qty	List Price
ØX8-31ØA	N/A	4	$96
JX8-31ØA	Job Pack	12	$82
ØX8-34ØA	With Stops	4	$119
JX8-34ØA	Job Pack w/Stops	12	$110

Retrofittable Metal Stem Cartridge Fits Into Existing Valve Bodies

Technical Info

Features:
- Rough-In Valve and Pressure Balance Cartridge
- Ceramic Disc Valve
- 1/2" Universal Inlets to Accept 1/2" Copper, 1/2" Iron Pipe, PEX or CPVC Adapters
- Back-to-Back Compatible
- JX= Job Pack Quantity Ships in Master Carton of 12
- 34ØA= with Screwdriver Stops
- Extension Kits See Page 184
- 5.5 gpm @ 60 psi

PermaBalance™
Tub & Shower Rough

JX8-11ØA	Job Pack	12	$82
JX8-14ØA	Job Pack w/Stops	12	$99

Retrofittable Metal Stem Cartridge Fits Into Existing Valve Bodies

Features:
- Rough-In Valve and Pressure Balance Cartridge
- Ceramic Disc Valve
- 1/2" Female IP Inlets and Outlets to Accept PEX or CPVC Fittings
- Back-to-Back Compatible
- JX= Job Pack Quantity Ships In Master Carton of 12
- 14ØA= with Screwdriver Stops
- Extension Kits See Page 184
- 5.5 gpm @ 60 psi

PermaBalance™
Tub & Shower Rough PEX Ready

JX8-31ØP	Job Pack	12	$82
JX8-34ØP	Job Pack w/Stops	12	$110

Retrofittable Metal Stem Cartridge Fits Into Existing Valve Bodies

This Valve Complies With ASTFM F1807 and CSA B137.5 and Is to Be Used with The SDR9 PEX Tubing Using the Crimp Ring System of Joining. It Cannot Be Used with Cold Expansion Fittings and Joining System.

Features:
- Rough-In Valve and Pressure Balance Cartridge
- Ceramic Disc Valve
- 1/2" PEX Inlets and Universal Male Threaded Outlets
- Back-to-Back Compatible
- JX= Job Pack Quantity Ships In Master Carton of 12
- 34ØP= With Screwdriver Stops
- Extension Kits See Page 184
- 5.5 gpm @ 60 psi

PermaBalance™ Tub & Shower Rough PEX Ready Valve

Model	Description	Case Qty	List Price
JX8-41ØP	Job Pack	12	$82
JX8-44ØP	Job Pack w/Stops	12	$110

1/2" Cold Expansion PEX Inlets

Retrofittable Metal Stem Cartridge Fits Into Existing Valve Bodies

Technical Info

Features:
- Rough-In Valve and Pressure Balance Cartridge
- Ceramic Disc Valve
- 1/2" PEX Inlets and Universal Male Threaded Outlets
- Back-to-Back Compatible
- JX= Job Pack Quantity Ships in Master Carton of 12
- 44ØP= with Screwdriver Stops
- Extension Kits See Page 184
- 5.5 gpm @ 60 psi

PermaBalance™ Tub & Shower Rough

VB8-31ØA	N/A	4	$51
VB8-34ØA	With Stops	4	$80

Lower Profile Casting Integrated Tie-Downs

Features:
- Valve Body Only
- Accepts 974-321Ø Pressure Balance Cartridge or TX9-ØØØ1 Thermostatic Cartridge
- Test Plug
- Back-to-Back Compatible
- 5.5 gpm @ 60 psi

PermaBalance™ Tub & Shower Rough PEX Ready

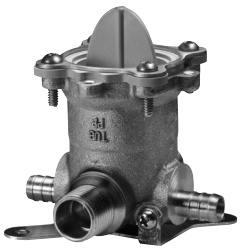

JV8-31ØP	Job Pack	12	$56

Lower Profile Casting Integrated Tie-Downs

This Valve Complies With ASTFM F1807 and Csa B137.5 and Is to Be Used with The SDR9 PEX Tubing Using the Crimp Ring System of Joining. It Cannot Be Used with Cold Expansion Fittings and Joining System.

Features:
- Valve Body Only
- Accepts 974-321Ø Pressure Balance Cartridge or TX9-ØØØ1 Thermostatic Cartridge
- 1/2" PEX Inlets and Universal Male Threaded Outlets
- Test Plug
- Back-to-Back Compatible
- JX= Job Pack Quantity Ships in Master Carton of 12
- 5.5 gpm @ 60 psi

PermaBalance™ Tub & Shower Rough PEX Ready Valve

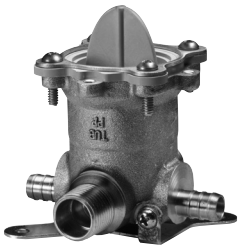

JV8-41ØP	Job Pack	12	$0
JV8-44ØP	Job Pack w/Stops	12	$0

1/2" Cold Expansion PEX Inlets

Features:
- Valve Body Only
- Accepts 974-321Ø Pressure Balance Cartridge or TX9-ØØØ1 Thermostatic Cartridge
- 1/2" PEX Inlets and Universal Male Threaded Outlets
- Test Plug
- Back-to-Back Compatible
- JX= Job Pack Quantity Ships in Master Carton of 12
- 5.5 gpm @ 60 psi

PermaBalance™ Pressure Balance Cartridge

974-321Ø	N/A	1	$34

Features:
- Pressure Balance Cartridge
- Ceramic Disc Valve
- Can Be Used with VB8 & JV8 Valve Bodies
- Metal Stem
- Extension Kits See Page 184

How to Order a 1/2” Thermostatic Shower System

Rough-In
Choose the desired rough-in valve

+

Trim
Select trim

=

Complete 1/2" Thermostatic Valve Trim

	Model	Description	Case Qty	List Price
1/2” Thermostatic Tub & Shower Rough Valve	TX9-31ØA	N/A	4	$154
	TX9-34ØA	With Stops	4	$190

Technical Info

Features:
- Ceramic Disc Valve
- 1/2” Thermostatic Rough In Valve and Cartridge
- PEX or CPVC Adapters
- Back-to-Back Compatible
- 34OA= with Screwdriver Stops
- 7 gpm @ 60 psi

Thermostatic Cartridge	TX9-ØØØ1	N/A	15	$98

Features:
- Ceramic Disc Valve
- 1/2” Thermostatic Cartridge Only
- Purchase VB8 or JV8 Valve Body Only Separately

How to Order a 3/4” Thermostatic Series Shower System

Rough-In

+

Trim

=

Complete 3/4" Thermostatic Shower Valve Trim

	Model	Description	Case Qty	List Price
Universal 3/4” Thermostatic Rough Valve	ØT8-41ØA	N/A	10	$232

Technical Info

Features:
- Valve Body Only
- Accepts 3/4” Thermostatic Cartridge Only
- Cartridge Ships with R89-9TH* Trim
- 3/4” Female NPT Inlets and Outlets
- Test Plug
- 12 gpm @ 60 psi

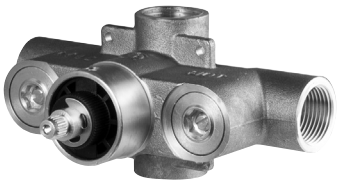

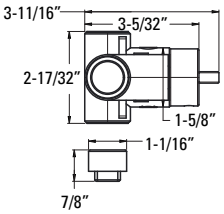

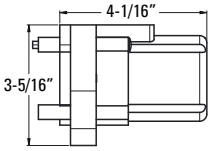

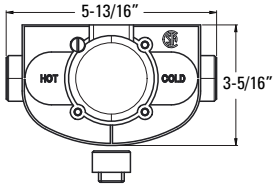

Universal 3/4” Thermostatic Volume Control Rough Valve	Ø14-3ØØA	N/A	18	$91

Features:
- On/Off Functionality
- Allows For Independent Volume Control Per Outlet
- 3/4” Female NPT Inlet and Outlet
- Must Order Trim Kit (R78-9VU*) Separately

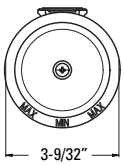

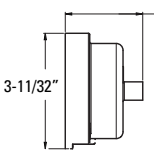

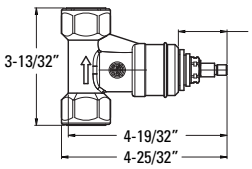

Universal 3-Port 3-Way Diverter	Ø16-6ØØA	N/A	18	$133

Features:
- 2-Port 3-Way Diverter Valve
- 1/2” Female NPT Outlets, 1/2” Male NPT Inlet
- Functionality - 1, 2, or 1 and 2
- Must Order Trim Kit (R79-6ØØ*) Separately

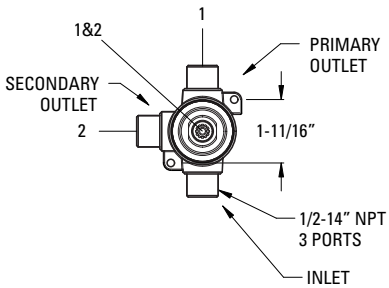

How to Order a Diverter

Rough-In
Choose the desired rough-in valve

+

Trim
Select trim

=

Complete Diverter

	Model	Description	Case Qty	List Price
2-Way Diverter Valve	Ø15-2WDX	Diverter Valve	4	$129

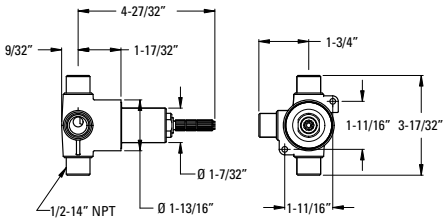

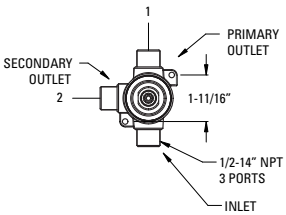

Technical Info

Features:
- 2-Port, 2-Way diverter
- 1/2" Male IP Common Threads
- No shared Functionality
- Install Depth 2 1/8-3" to Centerline Connection
- Functionality - 1 or 2 Only
- Extension Kit 97Ø-Ø89Ø

3-Way Diverter Valve	Ø15-4WDX	Diverter Valve	4	$133

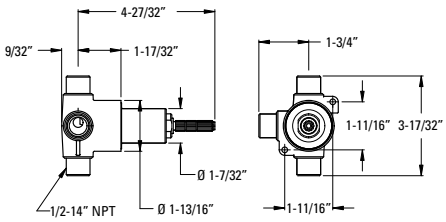

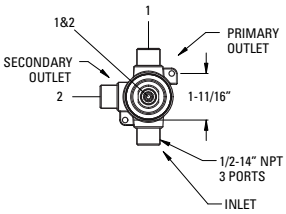

Features:
- 2-Port, 3-Way Diverter
- 1/2" Male IP Connection
- Shared Functionality to Run 2 Items Simultaneously
- Supports Showerhead and/or Hand Shower
- Install Depth 2 1/8-3" to Centerline Connection
- Functionality - 1, 2, or 1 and 2
- Extension Kit 97Ø-Ø89Ø

Diverter Valve	Ø15-IWDX	Diverter Valve	1	$81

Features:
- 4-Port, 2-Way Diverter Valve
- 1/2" IP Female Threaded Inlets and Outlets
- Does Not Support Shared Functionality
- Supports Showerhead and/or Hand Shower
- For Use With Ø16-DTI* Diverter Trim

CEC Compliant | Cal Green Compliant | Meets EPA WaterSense℠ Standards | NSF Lead-Free Certified | ADA Compliant | UltraSeal™ | SecurePfit™

How to Order a Single Hole Free-Standing Tub Filler

Rough-In
Choose the desired rough-in valve

+

Trim
Select trim

=

Complete Tub Filler

	Model	Description	Case Qty	List Price
Single Hole Concrete Rough In Kit	931-132	N/A	3	$200

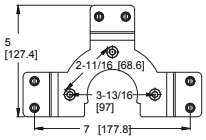

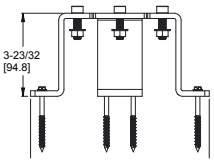

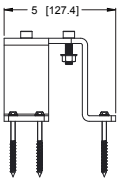

Technical Info

Holes: • 1 Hole Installation

Features:
- Rough In Kit to Be Used with Single Hole Free Standing Tub Valve with or without stops
- Intended for Deep Concrete Application
- Stainless Steel
- Concrete Mounting Hardware Not Included
- To Be Used with Modern or Rhen Tub Filler

Single Hole Free-Standing Tub Filler Valve with Stops	ØX6-27ØR	NA	1	$201

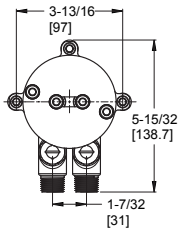

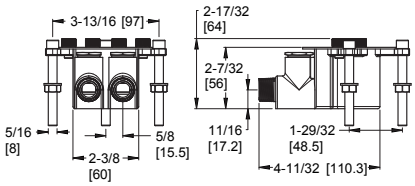

Features:
- Rough-In Valve Body for Installation Prior to Descriptioned Flooring
- To Be Used with Modern Single Hole Free-Standing Tub Filler with Hand Shower RT6-1MF*
- 6 gpm @ 45 psi
- 1/2" NPT Connection
- With Screwdriver Stops
- To Be Used with Modern or Rhen Tub Filler

Single Hole Free-Standing Tub Filler Valve Without Stops	ØX6-26ØR	NA	1	$201

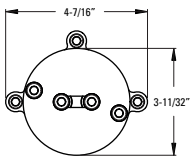

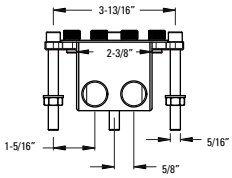

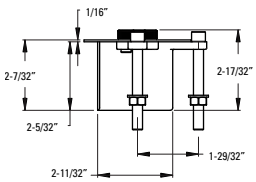

Features:
- Rough-In Valve Body for Installation Prior to Descriptioned Flooring
- To Be Used with Modern Single Hole Free-Standing Tub Filler with Hand Shower RT6-1MF*
- 6 gpm @ 45 psi
- 1/2" NPT Connection
- To Be Used with Modern or Rhen Tub Filler

CEC Compliant | Cal Green Compliant | Meets EPA WaterSense℠ Standards | NSF Lead-Free Certified | ADA Compliant | UltraSeal™ | SecurePfit™

How to Order a Roman Tub Faucet

Rough-In
Choose the desired rough-in valve

+

Trim
Select trim

=

Complete Faucet

Universal
Roman Tub Valve Rough

Model	Description	Case Qty	List Price
ØX6-Ø5ØR	N/A	3	$126
JX6-Ø5ØR	Job Pack	12	$114

Technical Info

Holes: • 3-Hole 10" Installation

Dims: • 2 3/4" Max Deck Thickness

Features:
- Rough-In Valve Body & Cartridge
- Ceramic Disc Valve
- 10" Fixed Valve Body
- Thin and Thick Deck Mounting Hardware
- Order 974-375 1" Extension Kit if Deck Thickness Exceeds 2 3/4", Requires 1 Kit Per Handle, Stackable to Reach Desired Height up to 4 1/2"
- Order 975-Ø15 Long Spout Shank if Deck Thickness Exceeds 2 3/4", Increases Max. Deck Thickness to 4 1/2"
- 1/2" Sweat Inlets
- JX= Job Pack Quantity Ships in Master Carton of 12
- 15 - 18 gpm @ 60 psi

Universal
Adjustable Roman Tub Valve Rough

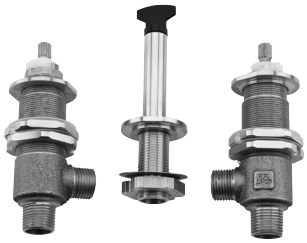

Model	Description	Case Qty	List Price
ØX6-15ØR	N/A	3	$113
JX6-15ØR	Job Pack	12	$103

Holes: • 3-Hole Installation

Dims: • 2 3/4" Max Deck Thickness

Features:
- Rough-In Valve Body & Cartridge
- Ceramic Disc Valve
- Adjustable Installation
- Thin and Thick Deck Mounting Hardware
- Order 974-375 1" Extension Kit if Deck Thickness Exceeds 2 3/4", Requires 1 Kit Per Handle, Stackable to Reach Desired Height up to 4 1/2"
- Order 975-Ø15 Long Spout Shank if Deck Thickness Exceeds 2 3/4", Increases Max. Deck Thickness to 4 1/2"
- 1/2" Universal IP Male Threaded Inlets and 1/2" IPS Male Threaded Outlets
- JX= Job Pack Quantity Ships in Master Carton of 12
- 15 - 18 gpm @ 60 psi

Universal
Adjustable Roman Tub Valve and Hand Shower Rough

Model	Description	Case Qty	List Price
ØX6-44ØR	N/A	3	$257

Holes: • 4-Hole 4 1/2–28" Installation

Dims: • 3" Max Deck Thickness

Features:
- Rough-In Valve Body & Cartridge
- Ceramic Disc Valve
- Adjustable Installation
- Thin and Thick Deck Mounting Hardware
- Order 974-375 1" Extension Kit if Deck Thickness Exceeds 3", Requires 1 Kit Per Handle, Stackable to Reach Desired Height up to 4 1/2"
- 1/2" Universal Male IP Threaded Inlets and 1/2" IPS Male Threaded Outlets
- 13 gpm @ 60 psi

Three-Handle Tub & Shower

	Model	Finish	Case Qty	List Price
Three-Handle Tub & Shower Rough	Ø1-31XA	N/A	4	$83

Technical Info

Holes: • 3-Hole 8" Installation

Features:
- Complete Valve
- 1/2" Union Inlets and 1/2" IP Outlets
- Union Nuts Included
- Ceramic Disc Cartridges

Two-Handle Tub & Shower

	Model	Finish	Case Qty	List Price
Two-Handle Tub & Shower Rough	Ø3-61XA	N/A	4	$71

Technical Info

Holes: • 2-Hole 8" Installation

Features:
- Complete Valve
- 1/2" Union Inlets and 1/2" IP Outlets
- Ceramic Disc Valves
- Union Nuts Included

Two-Handle Tub Rough	Ø5-31XA	N/A	4	$74

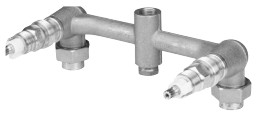

Holes: • 2-Hole 8" Installation

Features:
- Complete Valve
- 1/2" Union Inlets and 1/2" IP Outlets
- Union Nuts Included

Two-Handle Tub & Shower

	Model	Finish	Case Qty	List Price
Two-Handle Shower Rough	Ø7-31XA	N/A	4	$67

Technical Info

Holes: • 2-Hole 8" Installation

Features:
- Complete Valve
- 1/2" Union Inlets and 1/2" IP Outlets
- Union Nuts Included

CEC Compliant | Cal Green Compliant | Meets EPA WaterSense℠ Standards | NSF Lead-Free Certified | ADA Compliant | UltraSeal™ | SecurePfit™

Pfister® Lifetime Mechanical & Pfinish Limited Warranty

Covers Pfinish & Pfunction for as Long as You Own Your Home
Five-Year Limited Warranty on Electrical Components
One-Year Limited Warranty on GE® Filter Components (Excluding GE Filter Cartridges)

Pfister provides the following warranties for its products. Proof of purchase may be required in order to obtain any of the benefits set forth below. Commercial applications limit the duration of the warranties provided below.

Limited Warranties: Pfister warrants that for as long as the original purchaser owns the home in which the Pfister product (the "product" excluding the electronic sensor, control box, power unit, GE filter manifold and GE filter cartridges) is originally installed, the product will be free of all defects in material and workmanship that would impair the intended and proper use of the Product. If the product is installed in a commercial application, the above mechanical warranty shall be limited for a period of ten (10) years from the date of purchase of the product.

For the electrical components including the electronic sensor, control box and power unit (battery pack or AC adapter), Pfister provides a five-year limited warranty to the original residential user of the product against defects in material and workmanship, as long as the original user occupies the premises in which the product was originally installed.

Pfister provides a one-year limited warranty for the GE filter manifold and a one-month limited warranty for the GE filter cartridges to the original residential user of the product against defects in material and workmanship, as long as the original user occupies the premises in which the product was originally installed.

Pfister warrants against deterioration of the Product's finish for as long as the original purchaser owns the home in which the Product is originally installed. If the Product is installed in a commercial application, the above finish warranty for Products shall be limited to a period of ten (10) years from the date of purchase.

Exclusive Remedy: In the event of any defect in the product that breaches the foregoing warranties, Pfister, solely at its option, will repair or replace the defective part of the product. Repair or replacement of the product is the exclusive remedy. For any remedy under this warranty, Pfister is to be notified describing the problem. In order to notify Pfister and receive assistance or service under this warranty, the original purchaser may: (1) call 1-800-Pfaucet (1-800-732- 8238) for a consumer service representative who can assist you, or (2) write consumer service department c/o Pfister Inc., 19701 DaVinci, Lake Forest, CA 92610, and include a description of the problem, model number, your name, address, phone number and approximate date of purchase, or (3) email Pfister's customer service department by going to www.pfisterfaucets.com, or (4) notify the location or distributor from which the product was purchased. In any case, you may be required to return the product to Pfister for inspection and proof of purchase may be required.

Limitations and Exclusions: Pfister WILL NOT BE LIABLE FOR ANY OTHER DAMAGES OR LOSSES, INCLUDING, BUT NOT LIMITED TO, INCIDENTAL AND/OR CONSEQUENTIAL DAMAGES, REGARDLESS OF THE LEGAL THEORY ASSERTED, INCLUDING ANY CLAIM OR BREACH OF WARRANTY HEREUNDER OR ANY OTHER CAUSE, AND WHETHER ARISING IN CONTRACT OR IN TORT (including negligence and strict liability).

Pfister has the right to discontinue or modify any product at any time. Some states do not allow limitations or exclusions of incidental or consequential damages, so the above limitations or exclusions may not apply to you. This warranty gives you specific legal rights, and you may also have other rights which vary from state to state.

The above warranties do not cover damage resulting from improper maintenance, repair, cleaning or installation, misuse, abuse, alterations, accidents or acts of God.

Copyright ©2018 Pfister, Inc.

In the US:
www.pfisterfaucetspro.com
1-800-PFAUCET (732-8238)
Pfister Consumer Service
19701 DaVinci
Lake Forest, CA 9261Ø

In Canada:
www.Pfisterfaucets.ca
1-800-340-7608
Spectrum Brands Canada, Inc
101-255 Longside Dr, Mississauga,
Ontario, Canada L5W 0G7

Index

Pfister Terms and Conditions

THE FOLLOWING TERMS AND CONDITIONS ARE DEEMED TO BE INCORPORATED BY REFERENCE IN ANY ORDER FOR THE SALE OF PFISTER PRODUCTS EFFECTIVE 3/1/13

PRICES

All prices are subject to change without notice and are not guaranteed. All taxes, duties or other charges are the responsibility of the Purchaser.

CHANGE OR CANCELLATIONS

Beyond 5 working days of our acknowledgement date no changes can be made. Additions to an order will be handled as a separate order and must meet applicable minimum order requirements.

Order cancellation on regular stock items only, or any portion thereof is allowed only upon prior written consent from Pfister, and the payment of cancellation charges deemed appropriate.

MINIMUM ANNUAL SALES VOLUME

Pfister reserves the right to discontinue direct sales to any customer who does not meet the minimum annual sales volume requirement. The current annual requirement is $25,ØØØ.ØØ.
Your annual purchases are determined by accepted, non-cancelled, and shipped orders received during each calendar year. This requirement is necessary because the administration, sales, and service costs to keep an account open may exceed any profit which might be realized below the level of this minimum.
Pfister reserves the right to change any or all minimum annual sales volume requirements at any time.
Any customer who does not meet the annual sales volume requirements may continue to purchase Pfister products through a Pfister distributor.

ORDERS AND ACCEPTANCE

Pfister reserves the right to refuse to accept any order, and no purchase order or indication of acceptance shall create a contract or otherwise be binding upon Pfister unless and until the same is accepted in writing at the Pfister offices located in Lake Forest, California. In the event Pfister accepts an order from Purchaser, it is expressly understood and agreed that the terms and conditions herein set forth shall prevail, notwithstanding the fact that the same may conflict with or vary from the terms and conditions set forth on any purchase order or other form which Purchaser may use to place such order, and the placing of such order by Purchaser shall be deemed to note Purchaser's assent to the foregoing.

TERMS

2% 45 days, net 46 days. Pfister reserves the right to alter credit terms up to and including cash-in-advance. Terms are F.O.B. Pfister distribution centers.

FREIGHT ALLOWANCE

For net minimum order of $1ØØØ or more, F.O.B. Pfister distribution centers with full freight allowed, as agreed in writing, or prepaid on shipments within the continental United States.

PROMISES OF SHIPMENT

Pfister does not guarantee shipping dates notwithstanding anything contained herein to the contrary Pfister will not be responsible for any consequential, special or indirect damages of any nature, or any damages that include loss of profits suffered by Purchaser because of late shipping or delivery. Pfister is not responsible for delays due to reasons beyond its reasonable control such as fire, earthquake, strikes, material shortages, government regulations, etc.

LOSS OR DAMAGE IN TRANSIT

All products are sold F.O.B. Pfister distribution centers, with risk of loss passing to Purchaser at that point Purchaser is responsible for arranging and paying for all insurance against risk of loss of or damage to the products after Pfister delivers the products into the possession of the carrier.

RETURNED GOODS

No products may be returned without our prior written authorization. If a product return is authorized, our representative will provide you with a Return Goods Authorization form (RGA) for the returnable products. The RGA form must accompany the shipment of the returned products to us.
If products were defective or were shipped in error a credit at the invoice price will be issued or replacement products will be shipped only after a thorough inspection of the returned products has been made by our representative and such inspection confirms that the products were defective or shipped in error. Please return defective products in their original packaging.
We have no obligation to agree to the return of non-defective products properly shipped. If, in our discretion, we agree to the return of non-defective, properly shipped products: (a) you will be issued a credit based on the price in effect when the products are returned or at the invoice price, whichever is lower, less the cost of return freight; (b) a 25% restocking charge will apply; and (c) returned products must be in their original package (master carton).

PRODUCT MODIFICATION

The right is reserved to deliver modified products in fulfillment of any accepted order unless Purchaser indicates otherwise in writing, placed conspicuously on the face of his/her purchase order.

INSPECTION

Purchaser shall, at its sole expense, submit all products shipped to a careful inspection upon arrival at the delivery point. All claims for damages, defects, errors, shortages or other failure of the products to conform to this agreement or their catalog description shall be delivered to Pfister in writing within ten (1Ø) days after such arrival. Failure to make any such claim within said period shall constitute acceptance of all products so delivered as conforming to the terms, conditions and specifications hereof, and in no event may such acceptance be thereafter revoked by Purchaser. Any claims by Purchaser shall be subject to inspection by Pfister or its authorized agent, to whom Purchaser shall make available access to such products and all relevant information relating to the claim. In the event Purchaser notifies Pfister of a claim within the above period and Pfister determines the claim to be valid, Purchaser's sole remedy shall be to have Pfister replace the defective or missing products within a reasonable time or authorize Purchaser to return the defective products to Pfister for credit or give Purchaser a credit for the missing products.

TAXES

All prices are exclusive of, and may be increased by the amount of, any and all applicable excise, sales, use, manufacturer's, value added and other taxes, levies, or imposts of a governmental nature, whether federal, state or local.

COLLECTION CHARGES

In the event it becomes necessary to incur any expense for collection of any overdue account, reasonable collection charges, including reasonable attorneys' fees, will be added to the balance due and Purchaser shall pay any said charges.

MODIFICATION

These terms and conditions express the entire understanding of the parties here to with respect to the subject matter here of . No variation hereof and no agreement modifying or supplementing the terms hereof shall be valid unless in writing and signed by an authorized officer of Purchaser and Pfister.

SECURITY INTEREST

Purchaser undertakes to execute such further documentation, including but not limited to financing statements, as may be required by Pfister to grant or perfect such security interest. In the event of default, Pfister will have rights provided a secured party under the Uniform Commercial Code and Pfister is hereby authorized to file with any governmental authority or agency any documentation required to perfect such security interest.

NON-WAIVER

Any failure on the part of Pfister to insist upon the strict performance of any term or condition set forth herein shall not be deemed a waiver of any Pfister rights or remedies hereunder, nor of its right to insist upon the strict performance of the same or any other term hereof in the future. No waiver of any term or condition hereunder shall be valid unless in writing and signed by an authorized officer of Pfister.

EXPORT SALES

The above terms and conditions do not apply to original equipment manufacturers or export sales or purchases made in the United States of America for export purposes. Please contact the international group for further details.

SPECIAL FINISHES

Regular use of a soft cloth rinsed in warm, soapy water will keep a Pfister finish looking clean and new. The use of polish, detergents, abrasive cleaners, organic solvents or acid to clean, shine or polish such finishes will nullify the Pfister warranty as to such finishes.

PFISTER WARRANTY STATEMENT

The Product Warranty, attached hereto, is incorporated herein by reference.

DEFAULT

If Purchaser is in default under any order or contract with Pfister or any of its affiliated divisions or companies, or if Pfister at any time shall not be satisfied with Purchaser's financial conditions or responsibility, Pfister shall have the right, without prejudice to any other legal remedy, of suspending deliveries until such default or condition is remedied.

ASSIGNMENT

Purchaser shall not assign its orders nor any of its rights or obligations thereunder without Pfister's prior written consent.

APPLICABLE LAW

These Terms and Conditions and any subsequent sales agreements between Pfister and Purchaser shall be construed in accordance with the laws of the State of Delaware.

Model No.	Page No.	Price
ØØ5-311Ø	192	$124
Ø11-411Ø	195	$99
Ø1-31XA	293	$83
Ø14-3ØØA	288	$91
Ø15-Ø6CC	210	$46
Ø15-Ø6CK	210	$68
Ø15-Ø6CU	210	$101
Ø15-12CC	210	$56
Ø15-12CK	210	$79
Ø15-12CU	210	$112
Ø15-12CY	210	$101
Ø15-15ØA	221	$24
Ø15-1WDX	289	$81
Ø15-25ØA	221	$35
Ø15-25ØK	221	$68
Ø15-2WDX	289	$129
Ø15-38BC	222	$99
Ø15-38BC	223	$99
Ø15-38BK	222	$209
Ø15-38BK	223	$209
Ø15-4WDX	289	$133
Ø15-BDØC	230	$73
Ø15-BDØK	230	$83
Ø15-BDØY	230	$88
Ø15-HV1C	200	$90
Ø15-HV1K	200	$106
Ø15-HV1Y	200	$152
Ø15-LCØC	204	$22
Ø15-NC11	200	$91
Ø15-NK11	200	$102
Ø15-PCØ1	203	$39
Ø15-PKØ1	203	$55
Ø16-15ØC	215	$35
Ø16-15ØK	215	$57
Ø16-15ØY	215	$75
Ø16-17ØB	214	$73
Ø16-17ØC	214	$34
Ø16-17ØD	214	$50
Ø16-17ØK	214	$52
Ø16-17ØY	214	$66
Ø16-17FB	56, 73, 215	$73
Ø16-17FBG	56, 215	$61
Ø16-17FC	56, 73, 215	$34
Ø16-17FD	215	$50

Model No.	Page No.	Price
Ø16-17FK	56, 73, 25	$52
Ø16-17FY	215	$66
Ø16-18ØB	73, 214	$137
Ø16-18ØBG	56	$72
Ø16-18ØC	73, 214	$40
Ø16-18ØD	214	$95
Ø16-18ØK	56, 73, 214	$95
Ø16-18ØY	214	$128
Ø16-6ØØA	288	$133
Ø16-BSØC	36, 135, 218	$73
Ø16-BSØK	36, 135, 218	$88
Ø16-BSØY	36, 135, 218	$125
Ø16-CB1C	36, 151, 218	$62
Ø16-CB1K	36, 151, 218	$86
Ø16-CB1Y	36, 151, 218	$115
Ø16-DAØB	36, 119, 217	$125
Ø16-DAØC	36, 119, 217	$73
Ø16-DAØK	36, 119, 217	$88
Ø16-DE1C	36, 92, 216	$106
Ø16-DE1D	36, 92, 216	$125
Ø16-DE1K	36, 92, 216	$125
Ø16-DE1Y	36, 92, 216	$145
Ø16-DFØB	36, 70, 216, 230	$144
Ø16-DFØC	36, 70, 216, 230	$102
Ø16-DFØK	36, 70, 216, 230	$141
Ø16-GLØC	143, 218	$56
Ø16-GLØK	143, 218	$78
Ø16-GLØY	143, 218	$104
Ø16-MBØC	36, 101, 217	$86
Ø16-MBØD	36, 101, 217	$121
Ø16-MBØK	36, 101, 217	$121
Ø16-MBØY	36, 101, 217	$180
Ø16-MGØC	36, 127, 217	$73
Ø16-MGØK	36, 127, 217	$88
Ø16-MGØY	36, 127, 217	$125
Ø16-NC1B	36, 110, 217	$122
Ø16-NC1BG	36, 110, 217	$147
Ø16-NC1C	36, 110, 217, 230	$81
Ø16-NC1K	36, 110, 217, 230	$106
Ø16-RH1B	36, 216	$162
Ø16-RH1BG	36, 216	$175
Ø16-RH1C	36, 216	$105
Ø16-RH1K	36, 216	$145
Ø16-SRØC	36, 168, 218	$58

Model No.	Page No.	Price
Ø16-SRØK	36, 168, 218	$80
Ø16-SRØY	36, 168, 218	$107
Ø16-YPØC	36, 82, 216	$87
Ø16-YPØK	36, 82, 216	$126
Ø16-YPØU	36, 82, 216	$193
Ø16-YPØY	36, 82, 216	$186
Ø17-Ø1Ø	222	$76
Ø18-31ØC	223	$131
Ø18-31ØK	223	$153
Ø18-31ØY	223	$174
Ø19-Ø2ØØ	223	$85
Ø19-11ØØ	223	$93
Ø19-112Ø	224	$99
Ø19-17ØK	185	$21
Ø19-21ØØ	224	$57
Ø3-61XA	293	$71
Ø5-31XA	293	$74
Ø69-Ø2ØØ	15	$98
Ø7-31XA	293	$67
ØT8-41ØA	288	$232
ØX6-Ø5ØR	292	$126
ØX6-15ØR	271	$113
ØX6-26ØR	291	$201
ØX6-27ØR	291	$201
ØX6-34ØR	290	$206
ØX6-44ØR	271, 292	$257
ØX8-31ØA	285	$96
ØX8-34ØA	285	$119
171-1ØØØ	269	$50
171-2ØØØ	269	$56
19-17ØK	224	$22
19-AKØ	224	$21
1T6-51ØØ	274	$127
1T6-51ØK	274	$167
1T6-51ØY	274	$199
9ØØ-ØØ9Y	184	$135
9ØØ-Ø1ØJ	184	$112
9ØØ-Ø19A	184	$64
9ØØ-Ø2ØY	184	$113
9ØØ-Ø21J	184	$87
9ØØ-Ø3ØA	184	$110
9ØØ-Ø31Y	184	$160
9ØØ-Ø32J	184	$138
91Ø-ØØ5Ø	184	$74
91Ø-ØØ7Ø	184	$38

Model No.	Page No.	Price
91Ø-Ø62A	28, 39, 186	$116
91Ø-Ø62D	28, 39, 186	$138
91Ø-Ø62J	28, 39, 186	$138
91Ø-Ø62Y	28, 39, 186	$155
91Ø-561Ø	184	$15
91Ø-563A	184	$20
91Ø-563K	184	$25
91Ø-563U	184	$52
91Ø-563Y	184	$36
91Ø-862Ø	184	$19
92Ø-Ø21A	219	$84
92Ø-Ø21D	219	$96
92Ø-Ø21J	219	$96
92Ø-Ø21Y	219	$105
92Ø-Ø22A	196	$48
92Ø-Ø22J	196	$57
92Ø-Ø22Y	196	$65
92Ø-Ø66A	220	$65
92Ø-Ø66J	220	$80
92Ø-Ø66Y	220	$93
92Ø-124A	16	$91
92Ø-124B	16	$107
92Ø-124D	16	$93
92Ø-124S	16	$90
92Ø-136A	111, 220	$69
92Ø-136B	220	$76
92Ø-136BG	220	$81
92Ø-136J	111, 220	$86
92Ø-146A	219	$118
92Ø-146D	219	$135
92Ø-146J	219	$135
92Ø-146Y	219	$144
92Ø-176A	220	$115
92Ø-176A	220	$117
92Ø-176J	220	$129
92Ø-176J	220	$132
92Ø-176Y	220	$139
92Ø-176Y	220	$141
92Ø-186A	221	$62
92Ø-186J	221	$80
92Ø-186Y	221	$91
92Ø-2Ø8A	220	$70
92Ø-2Ø8B	220	$92
92Ø-2Ø8J	220	$85
92Ø-2Ø9A	55	$81

Model No.	Page No.	Price
92Ø-2Ø9B	55	$97
92Ø-2Ø9BG	55	$112
92Ø-2Ø9K	55	$92
92Ø-411A	196	$23
92Ø-411J	196	$30
92Ø-411Y	196	$50
92Ø-523A	221	$69
92Ø-523J	221	$86
92Ø-523Y	221	$81
92Ø-524A	219	$56
92Ø-524J	219	$70
92Ø-524U	219	$71
92Ø-524Y	219	$75
92Ø-623A	55, 73, 219	$81
92Ø-623B	55, 73, 219	$97
92Ø-623J	55, 73, 219	$92
92Ø-911A	222	$95
92Ø-911J	222	$82
92Ø-911U	222	$97
92Ø-911Y	222	$104
931-132	290	$200
931-134A	28, 40	$100
931-134D	28, 40	$150
931-134J	28, 40	$125
931-134Y	28, 40	$150
94Ø-525A	212	$11
94Ø-525J	212	$13
94Ø-525U	212	$16
94Ø-525Y	212	$17
941-Ø55Ø	I-12	$6
941-292Ø	I-12	$6
941-293Ø	I-12	$6
941-432Ø	I-12	$6
941-434Ø	I-12	$6
941-436Ø	I-12	$6
941-437Ø	I-12	$6
941-438Ø	I-12	$6
941-439Ø	I-12	$6
941-441Ø	I-12	$6
941-442Ø	I-12	$6
941-444Ø	I-12	$6
941-445Ø	I-12	$6
941-448Ø	I-12	$6
941-449Ø	I-12	$6
941-45ØØ	I-12	$6

Model No.	Page No.	Price
941-785Ø	I-12	$6
941-786Ø	I-12	$6
941-787Ø	I-12	$6
941-818Ø	I-12	$6
941-819Ø	I-12	$6
941-82ØØ	I-12	$6
96Ø-Ø39A	212	$7
96Ø-Ø39D	212	$9
96Ø-Ø39J	212	$9
96Ø-Ø39Y	212	$8
96Ø-Ø63A	213	$3
96Ø-Ø63J	213	$6
96Ø-Ø63Y	213	$8
96Ø-Ø97A	55, 72, 212	$14
96Ø-Ø97B	55, 72, 212	$16
96Ø-Ø97J	55, 72, 212	$18
96Ø-258A	111, 213	$8
96Ø-258B	213	$14
96Ø-258BG	213	$16
96Ø-258J	111, 213	$12
96Ø-274A	212	$11
96Ø-274D	212	$13
96Ø-274J	212	$13
96Ø-274Y	212	$15
96Ø-282A	213	$11
96Ø-282J	213	$15
96Ø-323A	213	$3
96Ø-323J	213	$5
96Ø-331A	213	$6
96Ø-331B	213	$8
96Ø-331J	213	$7
96Ø-343A	55, 212	$14
96Ø-343B	55, 212	$16
96Ø-343BG	55, 212	$20
96Ø-343K	55, 212	$18
96Ø-344A	56, 214	$34
96Ø-344B	56, 214	$73
96Ø-344BG	56, 214	$61
96Ø-344K	56, 214	$52
97Ø-Ø83Ø	184	$44
97Ø-Ø89Ø	184	$94
971-Ø86Ø	185	$63
972-Ø22A	24	$38
972-Ø22B	24	TBD
972-Ø22BG	24	$45

Model No.	Page No.	Price
972-Ø22J	24	$41
972-Ø22U	24	$47
972-Ø22Y	24	$45
972-Ø53A	24	$19
972-Ø53B	24	$40
972-Ø53J	24	$25
972-Ø53U	24	$40
972-Ø53Y	24	$32
972-1Ø1A	24	$57
972-1Ø1B	24	$68
972-1Ø1BG	24	$71
972-1Ø1J	24	$62
972-1Ø1Y	24	$62
972-1ØU	24	$68
973- 226S	204	$32
973-ØØ9A	210	$31
973-ØØ9D	210	$41
973-ØØ9J	210	$41
973-ØØ9Y	210	$44
973-Ø19A	211	$45
973-Ø19D	211	$45
973-Ø19J	211	$45
973-Ø19Y	211	$62
973-Ø3ØA	72, 111, 211	$14
973-Ø3ØB	72, 211	$15
973-Ø3ØBG	211	$24
973-Ø3ØD	211	$26
973-Ø3ØJ	72, 111, 211	$15
973-Ø3ØU	211	$29
973-Ø3ØY	211	$31
973-Ø33A	211	$82
973-Ø33J	211	$90
973-Ø33Y	211	$104
973-1Ø3A	211	$66
973-1Ø3BG	211	$115
973-1Ø3D	211	$86
973-1Ø3J	211	$80
973-1Ø3Y	211	$100
973-169A	202	$41
973-169J	202	$57
973-169Y	202	$69
973-183A	201	$53
973-183J	201	$74
973-183Y	201	$100
973-226A	204	$23

Model No.	Page No.	Price
973-227A	202	$27
973-227J	202	$40
973-228A	72,198	$78
973-228B	72, 198	$142
973-228BG	198	$121
973-228D	198	$101
973-228J	72,198	$101
973-228Y	198	$110
973-241A	111, 199	$91
973-241B	111, 199	$136
973-241BG	111	$164
973-241BG	111, 199	$164
973-241J	111, 199	$100
973-255A	201	$31
973-255B	201	$56
973-255J	201	$42
973-257A	202	$75
973-257K	202	$195
973-257Y	202	$231
973-264A	55, 198	$98
973-264B	55, 198	$125
973-264BG	55, 198	$130
973-264K	55, 198	$119
973-5Ø5A	210	$128
973-5Ø5J	210	$143
973-5Ø5U	210	$169
973-5Ø5Y	210	$122
974-321Ø	286	$34
974-375Ø	185	$38
974-8ØØØ	223	$105
975-Ø15Ø	185	$18
BPH-CB1C	152, 260	$38
BPH-CB1K	152, 260	$58
BPH-CB1Y	152, 260	$58
BPH-DA1B	121, 161, 252	$54
BPH-DA1C	121, 161, 252	$45
BPH-DA1K	121, 161, 252	$50
BPH-DEØC	95, 249	$65
BPH-DEØD	95, 249	$80
BPH-DEØK	95, 249	$80
BPH-DEØY	95, 249	$93
BPH-DF1B	75, 245	$112
BPH-DF1C	75, 245	$77
BPH-DF1K	75, 245	$111
BPH-GL1C	139, 145, 177, 258	$38

Model No.	Page No.	Price
BPH-GL1K	137, 145, 177, 258	$49
BPH-GL1Y	137, 145, 177, 258	$59
BPH-MB1C	103, 251	$52
BPH-MB1D	103, 251	$64
BPH-MB1K	103, 251	$64
BPH-MB1Y	103, 251	$70
BPH-MG1C	129, 251	$43
BPH-MG1K	129, 251	$48
BPH-MG1Y	129, 251	$52
BPH-NC1B	113, 252	$66
BPH-NC1BG	112, 252	$79
BPH-NC1C	103, 251	$44
BPH-NC1K	103, 251	$59
BPH-RØCC	169, 182, 278	$20
BPH-RØKK	169, 182, 278	$27
BPH-RØYY	169, 182, 278	$27
BPH-RHØB	58, 243	$105
BPH-RHØBG	58, 243	$115
BPH-RHØC	58, 243	$80
BPH-RHØK	58, 243	$95
BPH-YP1C	84, 247	$53
BPH-YP1K	84, 247	$79
BPH-YP1U	84, 247	$97
BPH-YP1Y	84, 247	$80
BRB-CBØC	152, 260	$36
BRB-CBØK	152, 260	$54
BRB-CBØY	152, 260	$54
BRB-DA1B	120, 160, 254	$44
BRB-DA1C	120, 160, 254	$37
BRB-DA1K	120, 160, 254	$40
BRB-DEØC	94, 248	$65
BRB-DEØD	94, 248	$80
BRB-DEØK	94, 248	$80
BRB-DEØY	94, 248	$91
BRB-DF1B	74, 244	$136
BRB-DF1C	74, 244	$95
BRB-DF1K	74, 244	$134
BRB-GL1C	136, 144, 176, 258	$38
BRB-GL1K	136, 144, 176, 258	$49
BRB-GL1Y	136, 144, 176, 258	$59
BRB-MB1C	102, 250	$45
BRB-MB1D	102, 250	$55
BRB-MB1K	102, 250	$55
BRB-MB1Y	102, 250	$68
BRB-MG1C	128, 256	$36

Model No.	Page No.	Price
BRB-MG1K	128, 256	$39
BRB-MG1Y	128, 256	$43
BRB-NC1B	112, 252	$66
BRB-NC1BG	112, 252	$79
BRB-NC1C	112, 252	$44
BRB-NC1K	112, 252	$54
BRB-RØCC	169, 182, 262, 278	$18
BRB-RØKK	169, 182, 262, 278	$25
BRB-RØYY	169, 182, 262, 278	$25
BRB-RHØB	57, 242	$102
BRB-RHØBG	57, 242	$112
BRB-RHØC	57, 242	$82
BRB-RHØK	57, 242	$92
BRB-YPØC	84, 246	$49
BRB-YPØK	84, 246	$73
BRB-YPØU	84, 246	$78
BRB-YPØY	84, 246	$78
BRH-CBØC	153, 261	$24
BRH-CBØK	153, 261	$33
BRH-CBØY	153, 261	$33
BRH-DA1B	121, 161, 252	$35
BRH-DA1C	121, 161, 252	$28
BRH-DA1K	121, 161, 252	$32
BRH-DEØC	95, 249	$34
BRH-DEØD	95, 249	$38
BRH-DEØK	95, 249	$38
BRH-DEØY	95, 249	$44
BRH-DF1B	75, 245	$87
BRH-DF1C	75, 245	$59
BRH-DF1K	75, 245	$86
BRH-GL1C	137, 145, 177, 258	$22
BRH-GL1K	137, 145, 177, 258	$33
BRH-GL1Y	137, 145, 177, 258	$44
BRH-MB1C	103, 251	$27
BRH-MB1D	103, 251	$39
BRH-MB1K	103, 251	$39
BRH-MB1Y	103, 251	$51
BRH-MG1C	129, 257	$28
BRH-MG1K	129, 257	$32
BRH-MG1Y	129, 257	$37
BRH-NC1B	113, 252	$49
BRH-NC1BG	113, 252	$58
BRH-NC1C	113, 253	$33
BRH-NC1K	113, 253	$44
BRH-RØCC	169, 182, 262, 278	$11

Model No.	Page No.	Price
BRH-RØKK	169, 182, 262, 278	$12
BRH-RØYY	169, 182, 262, 278	$12
BRH-RHØB	58, 243	$75
BRH-RHØBG	58, 243	$85
BRH-RHØC	58, 243	$55
BRH-RHØK	58, 243	$65
BRH-YPØC	84, 247	$31
BRH-YPØK	84, 247	$44
BRH-YPØU	84, 247	$46
BRH-YPØY	84, 247	$50
BTB-CB2C	152, 260	$51
BTB-CB2K	152, 260	$76
BTB-CB2Y	152, 260	$76
BTB-DA1B	120, 160, 254	$63
BTB-DA1C	120, 160, 254	$52
BTB-DA1K	120, 160, 254	$57
BTB-DA2B	120, 160, 254	$66
BTB-DA2C	120, 160, 254	$54
BTB-DA2K	120, 160, 254	$59
BTB-DE1C	94, 248	$85
BTB-DE1D	94, 248	$96
BTB-DE1K	94, 248	$96
BTB-DE1Y	94, 248	$109
BTB-DE2C	94, 248	$99
BTB-DE2D	94, 248	$109
BTB-DE2K	94, 248	$109
BTB-DE2Y	94, 248	$125
BTB-DF1B	74, 244	$156
BTB-DF1C	74, 244	$100
BTB-DF1K	74, 244	$153
BTB-DF2B	74, 244	$181
BTB-DF2C	74, 244	$123
BTB-DF2K	74, 244	$176
BTB-GL1C	136, 144, 176, 258	$54
BTB-GL1K	136, 144, 176, 258	$65
BTB-GL1Y	136, 144, 176, 258	$75
BTB-GL2C	136, 144, 176, 258	$59
BTB-GL2K	136, 144, 176, 258	$70
BTB-GL2Y	136, 144, 176, 258	$80
BTB-MB1C	102, 250	$63
BTB-MB1D	102, 250	$74
BTB-MB1K	102, 250	$74
BTB-MB1Y	102, 250	$87
BTB-MB2C	102, 250	$86
BTB-MB2D	102, 250	$98

Model No.	Page No.	Price
BTB-MB2K	102, 250	$98
BTB-MB2Y	102, 250	$111
BTB-MG1C	128, 256	$50
BTB-MG1K	128, 256	$55
BTB-MG1Y	128, 256	$61
BTB-MG2C	128, 256	$52
BTB-MG2K	128, 256	$57
BTB-MG2Y	128, 256	$63
BTB-NC1B	112, 252	$81
BTB-NC1BG	112, 252	$99
BTB-NC1C	112, 252	$54
BTB-NC1K	112, 252	$76
BTB-NC2B	112, 252	$90
BTB-NC2BG	112, 252	$108
BTB-NC2C	112, 252	$59
BTB-NC2K	112, 252	$81
BTB-R2CC	169, 182, 262, 278	$31
BTB-R2KK	169, 182, 262, 278	$43
BTB-R2YY	169, 182, 262, 278	$43
BTB-RH1B	57, 242	$127
BTB-RH1BG	57, 242	$137
BTB-RH1C	57, 242	$107
BTB-RH1K	57, 242	$117
BTB-RH2B	57, 242	$175
BTB-RH2BG	57, 242	$185
BTB-RH2C	57, 242	$155
BTB-RH2K	57, 242	$165
BTB-YP2C	83, 246	$67
BTB-YP2K	83, 246	$103
BTB-YP2U	83, 246	$107
BTB-YP2Y	83, 246	$107
BTB-YP5C	83, 246	$124
BTB-YP5K	83, 246	$190
BTB-YP5U	83, 246	$190
BTB-YP5Y	83, 246	$210
G127-1ØØØ	268	$87
G133-1ØCC	264	$135
G133-1ØSS	264	$156
G133-1ØWW	264	$135
G133-1ØYY	264	$182
G134-1444	265	$61
G134-144S	265	$86
G134-3444	265	$67
G134-4444	265	$67
G134-444S	265	$96

Model No.	Page No.	Price
G134-5ØØØ	264	$104
G134-5ØØS	264	$171
G134-6ØØØ	264	$118
G134-6ØØS	264	$183
G134-7ØØØ	265	$128
G134-7ØØS	265	$183
G135-1ØØØ	266	$50
G135-11ØØ	267	$50
G135-2ØØØ	267	$53
G135-4ØØØ	266	$61
G135-41ØØ	267	$61
G135-5ØØØ	267	$64
G135-7ØØØ	266	$79
G135-7ØØS	266	$88
G135-8ØØØ	266	$91
G135-8ØØS	266	$100
G136-2ØØØ	268	$91
G136-2ØØS	268	$109
G136-5ØØØ	268	$102
G136-5ØØS	268	$120
G136-5ØØY	268	$145
G171-4ØØØ	269	$38
G529-PF1C	264	$187
G529-PF1S	264	$207
G529-PF1Y	264	$228
GT26-4CBC	11	$336
GT26-4CBS	11	$386
GT26-4CBY	11	$424
GT31-TDC	5	$466
GT31-TDD	5	$492
GT31-TDS	5	$492
GT31-TDY	5	$544
GT34-4TCC	11	$259
GT34-4TSS	11	$299
GT34-4TYY	11	$402
GT34-PTCC	12	$274
GT34-PTSS	12	$334
GT34-PTYY	12	$448
GT36-4CBC	13	$257
GT36-4CBS	13	$342
GT36-4DCC	13	$271
GT36-4DSS	13	$329
GT526-TMC	7	$361
GT526-TMS	7	$426
GT526-TMY	7	$468

Model No.	Page No.	Price
GT529-FLC	4	$647
GT529-FLS	4	$699
GT529-HIS	4	$620
GT529-IHB	4	$672
GT529-IHC	4	$569
GT529-MDC	7	$378
GT529-MDS	7	$441
GT529-MPC	5	$486
GT529-MPS	5	$538
GT529-SMB	6	$465
GT529-SMC	6	$389
GT529-SMD	6	$465
GT529-SMS	6	$440
GT529-TMC	8	$393
GT529-TMS	8	$464
GT529-TMY	8	$511
GT529-WH1C	6	$310
GT529-WH1S	6	$327
GT529-WH1Y	6	$358
GT529-YPC	7	$466
GT529-YPK	7	$522
GT529-YPU	7	$591
GT529-YPY	7	$608
GT533-PFC	15	$538
GT533-PFS	15	$600
GT533-PFY	15	$641
GT533-TDC	15	$538
GT533-TDD	15	$600
GT533-TDS	15	$600
GT533-TDY	15	$641
GT534-CMC	9	$291
GT534-CMS	9	$338
GT72-M1CC	15	$256
GT72-M1SS	15	$325
GT72-M1UU	15	$359
GT72-M1YY	15	$366
GT72-SMCC	14	$368
GT72-SMSS	14	$420
HHL-MØBC	26, 99	$65
HHL-MØBD	26, 99	$99
HHL-MØBK	26, 99	$99
HHL-MØBY	99	$115
HHL-YPLC	26,80	$78
HHL-YPLK	26,80	$97
HHL-YPLU	26,80	$107

Model No.	Page No.	Price
HHL-YPLY	26,80	$116
J15-Ø6ØC	276, 281	$15
J15-Ø6ØK	276, 281	$25
J15-Ø7ØC	276, 282	$25
J15-Ø7ØK	276, 282	$36
JV8-31ØP	280, 286	$56
JV8-41ØP	280	$54
JV8-44ØP	280	$84
JX6-Ø5ØR	281, 292	$114
JX6-15ØR	281, 292	$103
JX8-11ØA	280, 285	$82
JX8-14ØA	280, 285	$99
JX8-31ØA	279, 285	$82
JX8-31ØP	279, 285	$82
JX8-34ØA	279, 289	$110
JX8-34ØP	279	$110
JX8-41ØP	280, 286	$82
JX8-44ØP	280, 286	$110
KAG-K1BB	17	$37
KAG-K1CC	17	$20
KAG-K1DD	17	$37
KAG-K1KK	17	$23
KAG-K1SS	17	$25
KAG-K1YY	17	$37
KSD-IHBB	16	$206
KSD-IHCC	16	$171
KSD-IHSS	16	$192
KSD-K1CC	16	$76
KSD-K1SS	16	$98
KSD-LCCC	17	$35
KSD-LCSS	17	$41
KSD-LCWW	17	$38
KSD-M1CC	16	$76
KSD-M1SS	16	$98
KSD-M1UU	16	$112
KSD-M1YY	16	$106
LØW8-Ø1ØØ	284	$189
LGØ1-111Ø	188	$163
LGØ1-112Ø	189	$164
LGØ1-118Ø	189	$163
LGØ1-311Ø	188	$170
LGØ1-312Ø	189	$170
LGØ1-318Ø	189	$170
LGØ1-319Ø	189	$170
LGØ1-321Ø	188	$194

Model No.	Page No.	Price
LGØ1-341Ø	188	$238
LGØ1-81BC	190	$229
LGØ1-81PC	190	$229
LGØ1-8CBC	190	$247
LGØ1-8CPC	190	$229
LGØ1-911Ø	190	$77
LGØ3-611Ø	191	$167
LGØ3-612Ø	192	$167
LGØ3-618Ø	191	$167
LGØ3-82BC	192	$230
LGØ7-111Ø	193	$118
LGØ7-118Ø	193	$118
LGØ7-311Ø	193	$130
LGØ7-312Ø	193	$130
LGØ7-81BC	194	$188
LGØ7-8CBC	194	$202
LGØ7-8CPC	194	$188
LG142-Ø6ØØ	269	$124
LG142-Ø6ØK	269	$165
LG142-5ØØØ	270	$48
LG142-6ØØØ	270	$62
LG142-6ØØK	270	$94
LG142-7ØØØ	270	$83
LG142-8ØØØ	270	$97
LG142-8ØØK	270	$122
LG142-8ØØY	270	$149
LG143-5ØØØ	272	$39
LG143-5ØØ2	272	$39
LG143-51ØØ	271	$71
LG143-6ØØØ	271	$52
LG143-6ØØ2	272	$52
LG143-6ØØ5	272	$54
LG143-61ØØ	271	$84
LG143-61ØK	271	$100
LG143-61ØY	271	$132
LG148-7ØØØ	271	$109
LG148-7ØØK	271	$128
LG148-7ØØY	271	$141
LG149-6ØØØ	273	$120
LG149-61ØØ	273	$158
LG149-61ØK	273	$196
LG149-61ØY	273	$235
LG15-Ø6ØØ	203	$50
LG15-Ø6ØK	203	$62
LG15-Ø7ØØ	203	$62

Model No.	Page No.	Price
LG15-Ø7ØK	203	$115
LG15-4Ø7C	222	$294
LG15-4Ø7K	222	$373
LG15-4Ø7U	222	$453
LG15-4Ø7Y	222	$424
LG15-DE1C	199	$90
LG15-DE1D	199	$116
LG15-DE1K	199	$116
LG15-DE1Y	199	$131
LG15-HFØC	237	$92
LG15-HFØK	237	$112
LG15-M9ØC	199	$88
LG15-M9ØK	199	$106
LG15-M9ØY	199	$188
LG15-M95C	198	$118
LG15-M95K	198	$141
LG15-M95Y	198	$215
LG16-19ØC	209	$50
LG16-19ØK	209	$68
LG16-19ØU	209	$100
LG16-19ØY	209	$90
LG16-1DFB	70, 207	$304
LG16-1DFC	70, 207	$186
LG16-1DFK	70, 207	$298
LG16-2ØØC	208	$144
LG16-2ØØK	208	$258
LG16-2ØØU	208	$382
LG16-2ØØY	208	$300
LG16-3ØØC	34, 207, 237	$206
LG16-3ØØK	34, 207, 237	$351
LG16-3ØØU	34, 207	$517
LG16-3ØØY	34, 207	$445
LG16-3DEC	34, 93, 206	$306
LG16-3DED	34, 93, 206	$409
LG16-3DEK	34, 93, 206	$409
LG16-3DEY	34, 93, 206	$482
LG16-3DFB	34, 70, 231	$513
LG16-3DFC	34, 70, 231	$331
LG16-3DFK	34, 70, 231	$440
LG16-3RHB	34, 54, 205	$502
LG16-3RHBG	34, 54, 205	$524
LG16-3RHC	34, 54, 205	$325
LG16-3RHK	34, 54, 205	$430
LG16-4ØØC	208	$103
LG16-4ØØK	208	$155

Model No.	Page No.	Price
LG16-4ØØU	208	$272
LG16-4ØØY	208	$258
LG16-CBØC	209	$84
LG16-CBØK	209	$117
LG16-CBØY	209	$137
LG26-3NCC	10	$421
LG26-3NSS	10	$501
LG26-3NYY	10	$618
LG26-4DCC	11	$363
LG26-4DSS	11	$382
LG26-4DYY	11	$407
LG26-4NCC	10	$466
LG26-4NSS	10	$534
LG26-4NUU	10	$648
LG26-4NYY	10	$674
LG26-4YPC	10	$418
LG26-4YPK	10	$511
LG26-4YPY	10	$550
LG34-1PCØ	12	$144
LG34-1PSØ	12	$194
LG34-1PYØ	12	$239
LG34-3PCØ	12	$167
LG34-3PSØ	12	$227
LG34-3PYØ	12	$281
LG34-4PCØ	13	$167
LG34-4PSØ	13	$229
LG34-4PYØ	13	$281
LG4Ø-DEØC	20, 88	$327
LG4Ø-DEØD	20, 88	$440
LG4Ø-DEØK	20, 88	$440
LG4Ø-DEØY	20, 88	$451
LG4Ø-DFØB	20, 62	$558
LG4Ø-DFØC	20, 62	$403
LG4Ø-DFØK	20, 62	$548
LG4Ø-DF1B	20, 62	$535
LG4Ø-DF1C	20, 62	$382
LG4Ø-DF1K	20, 62	$526
LG4Ø-NBØØ	20, 106	$502
LG4Ø-NBGØØ	20, 106	$608
LG4Ø-NCØØ	20, 106	$335
LG4Ø-NKØØ	106	$446
LG4Ø-YPØC	20, 78	$390
LG4Ø-YPØK	20, 78	$445
LG4Ø-YPØU	20, 78	$467
LG4Ø-YPØY	20, 78	$473

Model No.	Page No.	Price
LG42-AMCC	21, 180	$137
LG42-AMCK	21, 180	$193
LG42-ANCC	21, 180	$125
LG42-CB1C	21, 148	$166
LG42-CB1K	21, 148	$197
LG42-CB1Y	21, 148	$223
LG42-DAØB	21, 116	$321
LG42-DAØC	21, 116	$207
LG42-DAØK	21, 116	$275
LG42-DEØC	20, 88	$255
LG42-DEØD	20, 88	$358
LG42-DEØK	20, 88	$358
LG42-DEØY	20, 88	$378
LG42-DFØB	20, 63	$482
LG42-DFØC	20, 63	$337
LG42-DFØK	20, 63	$471
LG42-DF1B	20, 63	$460
LG42-DF1C	20, 63	$313
LG42-DF1K	20, 63	$452
LG42-LPMC	21, 156	$166
LG42-LPMK	21, 156	$197
LG42-MGØC	21, 124	$207
LG42-MGØK	21, 124	$275
LG42-MGØY	21, 124	$321
LG42-NBØØ	20, 106	$392
LG42-NBGØØ	20, 106	$475
LG42-NCØØ	20, 106	$261
LG42-NKØØ	20, 106	$372
LG42-RH1B	20, 48	$465
LG42-RH1BG	20, 48	$475
LG42-RH1C	20, 48	$325
LG42-RH1K	20, 48	$455
LG42-SRØC	21, 164	$135
LG42-SRØK	21, 164	$166
LG42-SRØY	21, 164	$192
LG42-SR5C	21, 164	$125
LG42-WRØC	21, 172	$135
LG42-WRØK	21, 172	$166
LG42-WRØY	21, 172	$192
LG42-YPØC	20, 78	$292
LG42-YPØK	20, 78	$378
LG42-YPØU	20, 78	$404
LG42-YPØY	20, 78	$416
LG46-MØBC	98, 21	$288
LG46-MØBD	98, 21	$386

Model No.	Page No.	Price
LG46-MØBK	98, 21	$386
LG46-MØBY	98	$414
LG48-BSØC	21, 132	$202
LG48-BSØK	21, 132	$270
LG48-BSØY	21, 132	$311
LG48-CB1C	22, 148	$156
LG48-CB1K	22, 148	$187
LG48-CB1Y	22, 148	$213
LG48-GLØC	21, 139, 140	$156
LG48-GLØK	21, 140	$187
LG48-GLØY	21, 140	$213
LG48-MGØC	21, 124	$202
LG48-MGØK	21, 124	$270
LG48-MGØY	21, 124	$311
LG48-SRØC	22, 164	$120
LG48-SRØK	22, 164	$140
LG48-SRØY	22, 164	$166
LG48-SR5C	22, 165	$107
LG48-WRØC	22, 172	$120
LG48-WRØK	22, 172	$140
LG48-WRØY	22, 172	$166
LG49-BSØC	23, 132	$290
LG49-BSØK	23, 132	$342
LG49-BSØY	23, 132	$383
LG49-CB1C	23, 148	$239
LG49-CB1K	23, 148	$259
LG49-CB1Y	23, 148	$337
LG49-DAØB	23, 116	$383
LG49-DAØC	23, 116	$290
LG49-DAØK	23, 116	$342
LG49-DEØC	23, 89	$341
LG49-DEØD	23, 89	$430
LG49-DEØK	23, 89	$430
LG49-DEØY	23, 89	$476
LG49-DFØB	23, 64	$647
LG49-DFØC	23, 64	$451
LG49-DFØK	23, 64	$642
LG49-DF1B	22, 65	$539
LG49-DF1C	22, 65	$337
LG49-DF1K	22, 65	$534
LG49-DF2B	23, 64	$632
LG49-DF2C	23, 64	$431
LG49-DF2K	23, 64	$620
LG49-DF3B	22, 65	$527
LG49-DF3C	22, 65	$328

Model No.	Page No.	Price
LG49-DF3K	22, 65	$518
LG49-GLØC	23, 139, 140	$239
LG49-GLØK	23, 140	$259
LG49-GLØY	23, 140	$337
LG49-LPMC	24, 156	$239
LG49-LPMK	24, 156	$259
LG49-MØBC	23, 98	$394
LG49-MØBD	23, 98	$509
LG49-MØBK	23, 98	$509
LG49-MØBY	23, 98	$541
LG49-MGØC	23, 124	$290
LG49-MGØK	23, 124	$342
LG49-MGØY	23, 124	$383
LG49-NC1B	23, 107	$497
LG49-NC1BG	23, 107	$603
LG49-NC1C	23, 107	$332
LG49-NC1K	23, 107	$386
LG49-RH1B	22, 48	$625
LG49-RH1BG	22, 48	$635
LG49-RH1C	22, 48	$435
LG49-RH1K	22, 48	$620
LG49-RH2B	49	$520
LG49-RH2BG	49	$530
LG49-RH2C	49	$325
LG49-RH2K	49	$515
LG49-SRØC	24, 165	$197
LG49-SRØK	24, 165	$233
LG49-SRØY	24, 165	$285
LG49-WRØC	24, 172	$197
LG49-WRØK	24, 172	$233
LG49-WRØY	24, 172	$285
LG49-YP1C	23, 79	$416
LG49-YP1K	23, 79	$508
LG49-YP1U	23, 79	$560
LG49-YP1Y	23, 79	$569
LG529-ESAB	4	$475
LG529-ESAC	4	$350
LG529-ESAS	4	$415
LG529-MCC	5	$517
LG529-MCS	5	$569
LG529-SAB	8	$368
LG529-SAC	8	$239
LG529-SAS	8	$290
LG531-YPC	6	$712
LG531-YPK	6	$823

Model No.	Page No.	Price
LG531-YPY	6	$915
LG532-7CC	9	$463
LG532-7SS	9	$493
LG532-7YY	9	$517
LG534-7CC	9	$352
LG534-7SS	9	$422
LG534-LPMB	9	$325
LG534-LPMC	9	$199
LG534-LPMS	9	$235
LG572-SAB	14	$342
LG572-SAC	14	$223
LG572-SAS	14	$275
LG6-1MFC	28, 39	$827
LG6-1MFD	28, 39	$1,010
LG6-1MFK	28, 39	$1,010
LG6-1MFY	28, 39	$1,087
LG6-1RHB	28, 38, 51	$1,778
LG6-1RHBG	28, 38, 51	$1,924
LG6-1RHC	28, 38, 51	$1,515
LG6-1RHK	28, 38, 51	$1,648
LG6-1TFC	28, 40	$1,034
LG6-1TFD	28, 40	$1,191
LG6-1TFK	28, 40	$1,191
LG6-1TFY	28, 40	$1,398
LG6-4D1B	27, 68	$882
LG6-4D1C	27, 68	$590
LG6-4D1K	27, 68	$867
LG6-4DEC	27, 90	$507
LG6-4DED	27, 90	$589
LG6-4DEK	27, 90	$589
LG6-4DEY	27, 90	$631
LG6-4DFB	27, 68	$896
LG6-4DFC	27, 68	$611
LG6-4DFK	27, 68	$880
LG6-4GLC	27, 139, 141	$441
LG6-4GLK	27, 141	$561
LG6-4GLY	27, 141	$628
LG6-4RHB	27, 50	$865
LG6-4RHBG	27, 50	$895
LG6-4RHC	27, 50	$590
LG6-4RHK	27, 50	$850
LG6-5RHBG	27, 50	$700
LG89-Ø2ØØ	277	$37
LG89-Ø2ØK	277	$77
LG89-Ø2ØY	277	$110

Model No.	Page No.	Price
LG89-Ø3ØØ	277	$45
LG89-Ø3ØK	277	$88
LG89-Ø3ØY	277	$138
LG89-7BSC	31, 134	$145
LG89-7BSK	31, 134	$218
LG89-7BSY	31, 134	$254
LG89-7CBC	32, 150	$78
LG89-7CBK	32, 150	$202
LG89-7CBY	32, 150	$240
LG89-7DAB	31, 119	$254
LG89-7DAC	31, 119	$145
LG89-7DAK	31, 119	$218
LG89-7DEC	31, 91	$254
LG89-7DED	31, 91	$327
LG89-7DEK	31, 91	$327
LG89-7DEY	31, 91	$389
LG89-7DFB	31, 69	$401
LG89-7DFC	31, 69	$241
LG89-7DFK	31, 69	$394
LG89-7GLC	31, 139, 142	$78
LG89-7GLK	31, 142	$202
LG89-7GLY	31, 142	$240
LG89-7LPMC	32, 158	$78
LG89-7LPMK	32, 158	$202
LG89-7MBC	31, 100	$144
LG89-7MBD	31, 100	$305
LG89-7MBK	31, 100	$305
LG89-7MBY	31, 100	$323
LG89-7MGC	31, 126	$145
LG89-7MGK	31, 126	$218
LG89-7MGY	31, 126	$254
LG89-7NCB	31, 109	$273
LG89-7NCBG	31, 109	$330
LG89-7NCC	31, 109	$182
LG89-7NCK	31, 109	$270
LG89-7RHB	31, 52	$435
LG89-7RHBG	31, 52	$450
LG89-7RHC	31, 52	$311
LG89-7RHK	31, 52	$387
LG89-7SRC	32, 167, 181	$58
LG89-7SRK	32, 167	$117
LG89-7SRY	32, 167	$143
LG89-7TUC	35, 228	$203
LG89-7TUK	35, 228	$285
LG89-7TUY	228	$373

Model No.	Page No.	Price
LG89-7WRC	32, 174	$68
LG89-7WRK	32, 174	$120
LG89-7WRY	32, 174	$145
LG89-7YPC	31, 81	$184
LG89-7YPK	31, 81	$292
LG89-7YPU	31, 81	$484
LG89-7YPY	31, 81	$430
LG89-8BSC	29, 134	$176
LG89-8BSK	29, 134	$249
LG89-8BSY	29, 134	$285
LG89-8CBC	30, 150	$104
LG89-8CBK	30, 150	$230
LG89-8CBY	30, 150	$264
LG89-8DAB	29, 118	$285
LG89-8DAC	29, 118	$176
LG89-8DAK	29, 118	$249
LG89-8DEC	29, 91	$327
LG89-8DED	29, 91	$404
LG89-8DEK	29, 91	$404
LG89-8DEY	29, 91	$456
LG89-8DFB	29, 69	$510
LG89-8DFC	29, 69	$322
LG89-8DFK	29, 69	$500
LG89-8GLC	29, 139, 142	$104
LG89-8GLK	29, 142	$230
LG89-8GLY	29, 142	$264
LG89-8LPMC	30, 158	$104
LG89-8LPMK	30, 158	$230
LG89-8MBC	29, 100	$206
LG89-8MBD	29, 100	$349
LG89-8MBK	29, 100	$349
LG89-8MBY	29, 100	$376
LG89-8MGC	29, 126	$176
LG89-8MGK	29, 126	$249
LG89-8MGY	29, 126	$285
LG89-8NCB	29, 109	$381
LG89-8NCBG	29, 109	$461
LG89-8NCC	29, 109	$254
LG89-8NCK	29, 109	$373
LG89-8RHB	29, 52	$525
LG89-8RHBG	29, 52	$545
LG89-8RHC	29, 52	$375
LG89-8RHK	29, 52	$470
LG89-8SRC	30, 167, 181	$77
LG89-8SRK	30, 167	$150

Model No.	Page No.	Price
LG89-8SRY	30, 167	$176
LG89-8TUC	35, 228	$285
LG89-8TUK	35, 228	$337
LG89-8TUY	35, 228	$389
LG89-8WRC	30, 174	$88
LG89-8WRK	30, 174	$151
LG89-8WRY	30, 174	$182
LG89-8YPC	29, 81	$232
LG89-8YPK	29, 81	$414
LG89-8YPU	29, 81	$513
LG89-8YPY	29, 81	$518
R78-9VUC	35, 236	$103
R78-9VUK	35, 236	$144
R79-6ØØC	36, 236	$134
R79-6ØØK	36, 236	$186
R89-Ø1ØØ	277	$37
R89-Ø4ØØ	276	$41
R89-Ø4ØK	276	$47
R89-Ø6ØØ	275	$50
R89-Ø6ØK	275	$70
R89-Ø7ØØ	275	$73
R89-Ø7ØK	275	$99
R89-1BSC	33, 135	$78
R89-1BSK	33, 135	$104
R89-1BSY	33, 135	$140
R89-1CBC	33, 151	$50
R89-1CBK	33, 151	$113
R89-1CBY	33, 151	$138
R89-1DAB	33, 119	$140
R89-1DAC	33, 119	$78
R89-1DAK	33, 119	$104
R89-1DEC	33, 92	$143
R89-1DED	33, 92	$187
R89-1DEK	33, 92	$187
R89-1DEY	33, 92	$218
R89-1DFB	33, 70	$235
R89-1DFC	33, 70	$142
R89-1DFK	33, 70	$231
R89-1GLC	33, 139, 143	$62
R89-1GLK	33, 143	$140
R89-1GLY	33, 143	$168
R89-1LPMC	33, 159	$63
R89-1LPMK	33, 159	$83
R89-1MBC	33, 101	$95
R89-1MBD	33, 101	$176

Model No.	Page No.	Price
R89-1MBK	33, 101	$176
R89-1MBY	33, 101	$209
R89-1MGC	33, 127	$78
R89-1MGK	33, 127	$104
R89-1MGY	33, 127	$140
R89-1NCB	33, 110	$151
R89-1NCBG	33, 110	$170
R89-1NCC	33, 110	$94
R89-1NCK	33, 110	$145
R89-1RHB	33, 53	$240
R89-1RHBG	53	$250
R89-1RHC	33, 53	$175
R89-1RHK	33, 53	$225
R89-1SRC	33, 168	$39
R89-1SRK	33, 168	$75
R89-1SRY	33, 168	$99
R89-1TUC	35, 228	$171
R89-1TUK	35, 228	$206
R89-1TUY	35, 228	$223
R89-1WRC	33, 175	$47
R89-1WRK	33, 175	$78
R89-1WRY	33, 175	$104
R89-1YPC	33, 82	$109
R89-1YPK	33, 82	$192
R89-1YPU	33, 82	$283
R89-1YPY	33, 82	$253
R89-2DFC	35, 70	$266
R89-2DFC	70	$370
R89-2DFK	35, 70	$356
R89-2NCBG	110	$301
R89-2NCC	35, 110	$218
R89-2NCK	35, 110	$270
R89-2RHB	35, 53	$365
R89-2RHBG	35, 53	$389
R89-2RHC	35, 53	$285
R89-2RHK	35, 53	$340
R89-9THC	35, 235	$192
R89-9THK	35, 235	$213
RT6-1DAB	25, 117	$673
RT6-1DAC	25, 117	$466
RT6-1DAK	25, 117	$570
RT6-2DAB	25, 117	$725
RT6-2DAC	25, 117	$570
RT6-2DAK	25, 117	$673
RT6-5BSC	26, 133	$306

RT6-5BSK	26, 133	$404
RT6-5BSY	26, 133	$435
RT6-5CB1C	26, 149	$213
RT6-5CB1K	26, 149	$259
RT6-5CB1Y	26, 149	$337
RT6-5D1B	25, 67	$701
RT6-5D1C	25, 67	$523
RT6-5D1K	25, 67	$689
RT6-5DAB	26, 118	$435
RT6-5DAC	26, 118	$306
RT6-5DAK	26, 118	$404
RT6-5DEC	25, 90	$393
RT6-5DED	25, 90	$486
RT6-5DEK	25, 90	$486
RT6-5DEY	25, 90	$527
RT6-5DFB	25, 67	$709
RT6-5DFC	25, 67	$539
RT6-5DFK	25, 67	$699
RT6-5GLC	26, 139, 141	$213
RT6-5GLK	26, 141	$259
RT6-5GLY	26, 141	$337
RT6-5LPMC	26, 157	$213
RT6-5LPMK	26, 157	$259
RT6-5MGC	26, 124	$306
RT6-5MGK	26, 124	$404
RT6-5MGY	26, 124	$435
RT6-5MXC	25	$339
RT6-5MXD	25	$505
RT6-5MXK	25	$505
RT6-5MXY	25, 99	$572
RT6-5NCB	25, 108	$512
RT6-5NCBG	25, 108	$619
RT6-5NCC	25, 108	$341
RT6-5NCK	108	$489
RT6-5RHB	50	$685
RT6-5RHC	50	$520
RT6-5RHK	50	$675
RT6-5SRC	26, 166	$187
RT6-5SRK	26, 166	$223
RT6-5SRY	26, 166	$275
RT6-5WRC	26, 173	$187
RT6-5WRK	26, 173	$223
RT6-5WRY	26, 173	$275
RT6-5YPC	25	$583
RT6-5YPK	25	$767

RT6-5YPU	25	$806
RT6-5YPY	25	$813
S1Ø-2ØØ	196	$57
S1Ø-21Ø	196	$56
S1Ø-22Ø	196	$72
S1Ø-23Ø	196	$69
S1Ø-32Ø	196	$93
S1Ø-33Ø	196	$97
S1Ø-4ØØK	196	$108
S1Ø-4ØØY	196	$143
S1Ø-43ØK	196	$139
S1Ø-43ØY	196	$177
T47-7GLB	24, 66, 107	$57
T47-7GLC	24, 66, 79, 89, 107, 180	$44
T47-7GLD	24, 89	$50
T47-7GLK	24, 66, 79, 89, 107	$50
T47-7GLU	24, 79	$62
T47-7GLY	24, 79, 89	$56
T47-9GSB	24, 66, 107	$57
T47-9GSC	24, 66, 79, 89, 107, 180	$44
T47-9GSD	24, 89	$50
T47-9GSK	24, 66, 79, 89, 107	$50
T47-9GSU	24, 79	$62
T47-9GSY	24, 79, 89	$56
TX9-ØØØ1	287	$98
TX9-31ØA	287	$154
TX9-34ØA	287	$190
VB8-31ØA	286	$51
VB8-34ØA	286	$80

DISCOVER THE PFISTER CATALOG APP

QUICK ACCESS TO ALL SPECS AND PRICING USING THE PFISTER APP

FEATURED HIGHLIGHTS:

- Access Price Guide without downloading the catalog
- Quickly locate content using links in the table of contents
- Bookmark pages for future references
- Seamless content sharing
- Screenshot and share information without leaving the app via email or social media
- Select page range to export as PDF

Pfister

ANDROID APP ON Google play

Download on the App Store

Pfister

PFISTERFAUCETS.COM/TRADE

© 2017 SPECTRUM BRANDS, INC.
PFISTER IS A TRADEMARK OF SPECTRUM BRANDS, INC.

19701 DAVINCI | LAKE FOREST, CA 92610
1-800-PFAUCET 1-800-732-8238

1/18 FEI-170164