48 Series

Catalina Collection

4” Centerset Lavatory Faucet

Critical Dimensions:	
Minimum Hole Size	1 - 1 1/2 Dia Thru Hole 3 Places
Valve Centerline to Back Splash	2 11/32 Min.

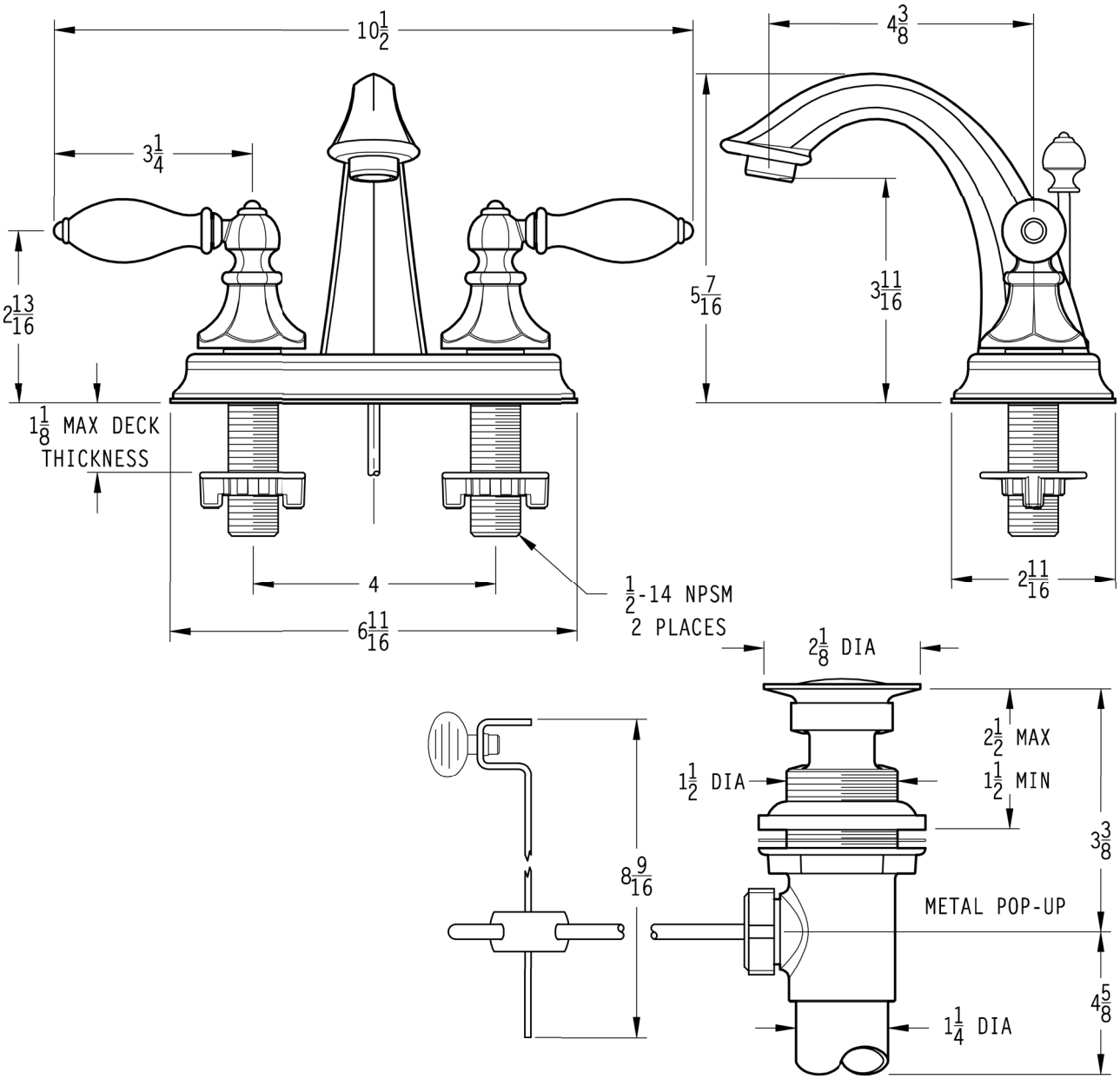

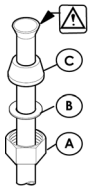

CAUTION:
When using the compression fittings in this package, with these types of installations, the installer must flare or bead the water supply lines to avoid blow-out conditions. Avoiding such steps in the installation of the unit may result in water damage.

Connect inlet supply lines by assembling brass supply nut (A), friction ring (B) and cone washer (C) onto 3/8" O.D. straight copper tube. Bead or flare. Wrench tighten.

Dimensions are in Inches

1-800-PFAUCET www.pricepfister.com
19701 DaVinci, Lake Forest, CA 92610
10/27/06

Price Pfister®
Pf Pfreshest Ideas in Pfaucets.