contigo®

AUTOPOP®

Jessie Spill-Proof Bottle

USE AND CARE INSTRUCTIONS

⚠ WARNING: Not for use with carbonated beverages.
Do not freeze or microwave. Store with lid removed and lid open.

⚠ CAUTION:

- Not intended for children under 3 years of age.
- Product is NOT designed for hot liquids. Use only with cold liquids. DO NOT use with carbonated or pulpy beverages.
- Prior to drinking, make sure the AUTOPOP® lid is properly threaded to the body and screwed completely.
- Avoid accidental depressing of the AUTOPOP® button by keeping the button free and clear of other objects.
- DO NOT overfill. Fill liquid just below the threading on the bottle.
- DO NOT use cleaners containing bleach, chlorine, abrasives, and/or harsh chemicals.
- DO NOT continue to use if product is damaged.

HOW TO USE

Push button to sip from chug mouth.

- Leak-proof lid.



HOW TO CLEAN

1. **Unscrew lid.**
2. **Open lid.**

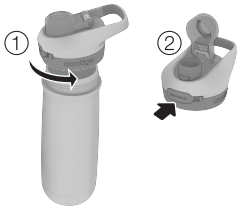

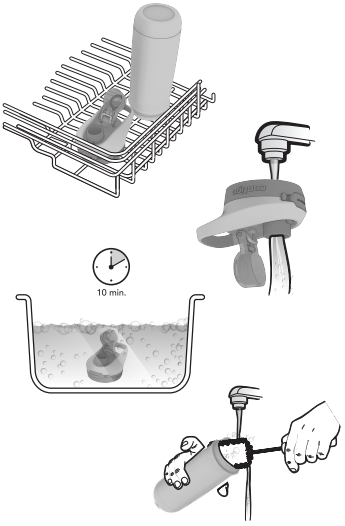

- Top rack dishwasher safe.
- RINSE LID IMMEDIATELY AFTER EACH USE with warm water, pressing the AUTOPOP® button so water flows through the drink opening.
- If washing by hand, soak lid for 10 minutes in hot, soapy water. Hand wash body with warm water and a mild detergent.
- Rinse both lid and body thoroughly before use.

LIFETIME GUARANTEE

*Limited Lifetime Guarantee only applicable in the US & Canada. Visit GoContigo.com for details.

Made in China | Product of: Contigo Brands | Chicago, IL 60601 | www.GoContigo.com

We would love to hear from you.
1.888.262.0622