Pfister

2020

FERGUSON®

WHOLESALE PRICE GUIDE

EFFECTIVE MARCH 1, 2020

NEW COLLECTIONS

NEERA

PORT HAVEN

Pfister
FERGUSON®

DIRECT CUSTOMERS

To place orders or check order status.
Phone · 800-422-4278 / Fax · 800-847-4288
Email · pfisterorders@spectrumbrands.com

AIR FREIGHT ORDERS
Fax · 866-507-8368
Email · pfisterairorders@spectrumbrands.com

For technical, warranty or installation questions
Phone · 1-800-732-8238

TABLE OF CONTENTS

Ferguson Collections
PAGE F-1

Kitchen
PAGE 1

Bath
PAGE 16

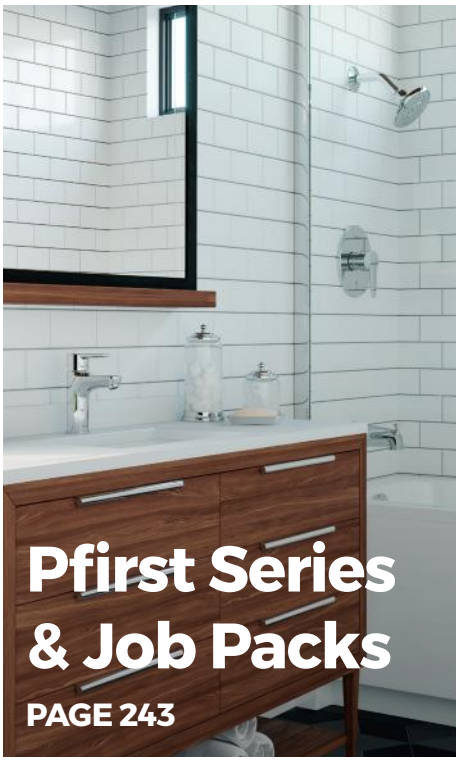

Pfirst Series & Job Packs
PAGE 243

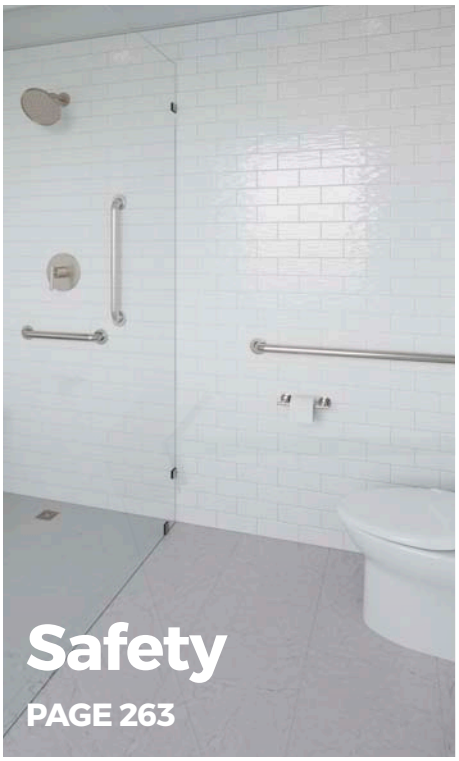

Safety
PAGE 263

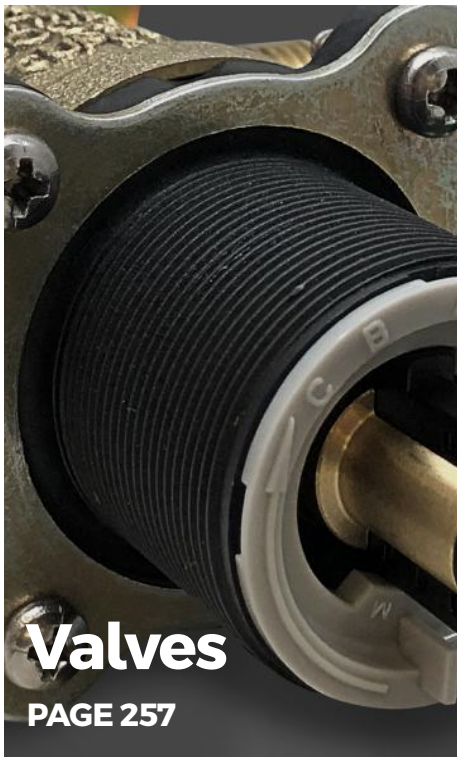

Valves
PAGE 257

Kitchen

FERGUSON EXCLUSIVE

Briarsfield™
Page F-2
SHOWROOM PREFERRED

TECHNOLOGY

Filtration

Lita™ with Xtract™
Page 4
SHOWROOM PREFERRED

Electronic

Stellen™ with React™
Page 4

PULL-DOWNS

Kai™
Page 4
SHOWROOM PREFERRED

Neera™
Page 5
SHOWROOM PREFERRED

Zuri™
Page 5
SHOWROOM PREFERRED

Port Haven™
Page 5
SHOWROOM PREFERRED

Lita™
Page 6
SHOWROOM PREFERRED

Ashfield™
Page 6
SHOWROOM PREFERRED

Ashfield™
Page 7
SHOWROOM PREFERRED

Mystique™
Page 7
SHOWROOM PREFERRED

Hanover™
Page 7
SHOWROOM PREFERRED

Wheaton™
Page 7
SHOWROOM PREFERRED

Stellen™
Page 8
SHOWROOM PREFERRED

Pfirst Series
Page 252

CULINARY

Zuri™
Page 5
SHOWROOM PREFERRED

Neera™
Page 9
SHOWROOM PREFERRED

PULL-OUTS

Marielle®
Page 8
SHOWROOM PREFERRED

Arkitek™
Page 9

Parisa®
Page 9

Pfirst Series
Page 252

SINGLE CONTROL & TWO HANDLE

Marielle®
Page 10
SHOWROOM PREFERRED

Ashfield™
Page 9
SHOWROOM PREFERRED

Avalon™
Page 10

SINGLE CONTROL & TWO HANDLE

Avalon™
Page 12

Portland™
Page 11

Pfirst Series
Page 253

POT FILLERS

Lita
Page 14
SHOWROOM PREFERRED

Port Haven
Page 13
SHOWROOM PREFERRED

Bath

FERGUSON EXCLUSIVE

Tenet™
Page F-4
SHOWROOM PREFERRED

Tisbury™
Page F-20
SHOWROOM PREFERRED

Kelen™
Page F-32
SHOWROOM PREFERRED

Park Avenue™
Page F-46
SHOWROOM PREFERRED

Iyla™
Page F-58
SHOWROOM PREFERRED

Rhen™
Page 42
SHOWROOM PREFERRED

Kenzo™
Page 58
SHOWROOM PREFERRED

Ashfield™
Page 74
SHOWROOM PREFERRED

Arterra™
Page 84
SHOWROOM PREFERRED

Marielle®
Page 94
SHOWROOM PREFERRED

Contempra®
Page 102
SHOWROOM PREFERRED

Deckard™
Page 112

Northcott™
Page 120

Bronson™
Page 128

Saxton™
Page 136

Avalon™
Page 144

Arkitek™
Page 152

Weller™
Page 160

Parisa®
Page 170

Pfirst Series
Page 251

We are Pfister.

For more than a century, families have been welcoming Pfister into their homes. We have become their partners through and through. We are willing to serve. Happy to help.

Never will you be hung out to dry. Never will your budget keep you from finding the style you'll love. Never will we stop searching for ways to improve your everyday experience.

We're faucet people. Real, humble, and hard-working. We know what you want out of a faucet, because we know what we'd want out of a faucet.

We put our hearts into everything we do, creating thoughtfully designed faucets and fixtures that fit perfectly into your life – because we believe everyone deserves to fill their home with style and quality no matter what their budget.

Pfister's Online Custom Spec Builder

Custom specs in just a few secs'.

Your clients need details, but getting them into one document can be a hassle. So use our Spec Builder to create custom spec sheets for your projects. You control what information gets included—and the output is a professionally-designed PDF that's easy to share with your clients. Yes, you can create a document anonymously, but we think it's worth taking a minute to register (it's free) so you can access and edit all your specs in the future.

Find the online spec builder here:
www.pfisterfaucets.com/tools-for-pros

STEPS TO SPEC-BUILDING SUCCESS

- **Start** with contact info, a cover image, and the info sheets you want to include.
- **Structure your project** by room, by package, or any way that works for you.
- **Add products** to your heart's content!
- **Check the boxes** to show quantity, prices, features, warranty details, and more.
- **Share. Print.** Frame it if you want! (Because a great spec is a work of art.)

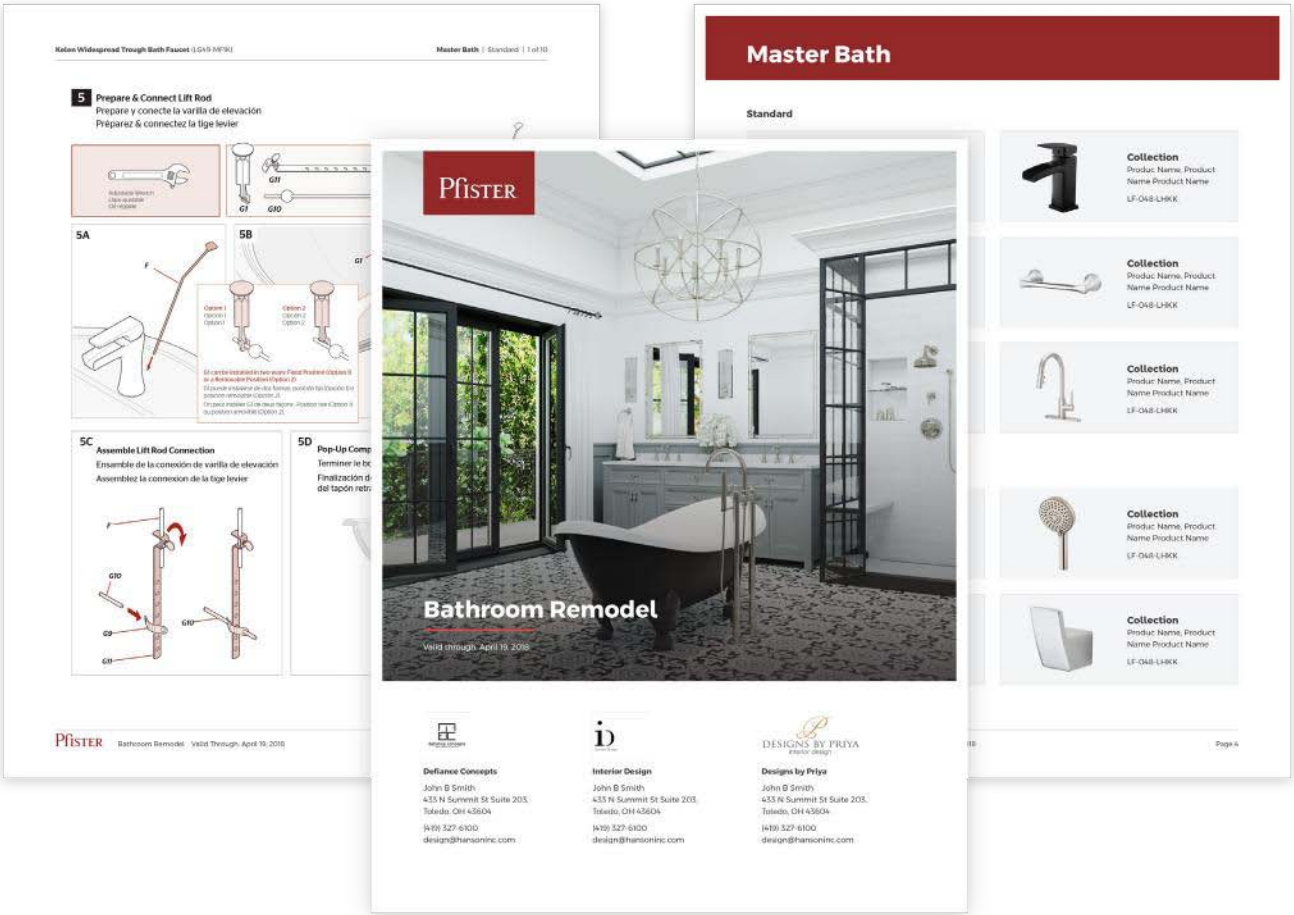
Kelon Widespread Trough Bath Faucet (LG49-MPIK)
Master Bath | Standard | 1 of 10
5 Prepare & Connect Lift Rod
Prepare y conecte la varilla de elevación
Préparez & connectez la tige levier
5A
5B
5C Assemble Lift Rod Connection
Ensamble de la conexión de varilla de elevación
Assemblez la connexion de la tige levier
5D Pop-Up Comp
Pfister Bathroom Remodel Valid Through: April 19, 2018
Master Bath
Standard
Collection
Produc Name, Product Name Product Name
LF-048-LHKK
Pfister
Bathroom Remodel
Valid through: April 19, 2018
Defiance Concepts
John B Smith
433 N Summit St Suite 203,
Toledo, OH 43604
(419) 327-6100
design@hansoninc.com
Interior Design
John B Smith
433 N Summit St Suite 203,
Toledo, OH 43604
(419) 327-6100
design@hansoninc.com
DESIGNS BY PRIYA
Designs by Priya
John B Smith
433 N Summit St Suite 203,
Toledo, OH 43604
(419) 327-6100
design@hansoninc.com

Xtract™ Filter Mode

Advanced Filtration. 2X Faster

Pfister faucets with Xtract technology deliver great-tasting filtered and regular tap water from a single faucet, 2X faster than typical water filter products. Xtract uses GE® 2X High Flow Filtration which reduces contaminants such as pharmaceuticals, chlorine, and lead.

React™

Response Activated Technology

Pfister's REACT faucets put you in charge when things get hectic in the kitchen. Simply guide your hand or an object within 3" of the front of the sensor to turn the water on or off. Minimize water spots, fingerprints, and the spread of germs with this reliable, touch-free faucet.

Ultra Seal™

Pfister's UltraSeal cartridge is a premium upgrade to your showroom preferred faucet offering you lifelong protection against leaks. Pfister ensures the strongest connection point to the handle with larger ceramic discs and an all-brass ¼-turn cartridge technology. UltraSeal cartridges can be retrofitted into most existing widespread faucets.

Accudock™

AccuDock is Pfister's advanced sprayhead docking technology which ensures a secure, tight connection of the spray head to the faucet spout every time. The AccuDock technology guarantees the spray head will stay securely in place after every use.

PUSH&SEAL™

DRAIN INNOVATION

Push & Seal is an innovative drain assembly that is easy to install and even easier to use. No tools are required, and it installs in half the time of a standard pop-up drain. Press to seal and again to open. It really is that easy.

Icon Legend

Meets EPA WaterSense℠ Standards

All items with the WaterSense℠ logo to the left of the model numbers meet or exceed the certification criteria of the EPA's WaterSense Program.

NSF Lead-Free Certified

All kitchen and lavatory model numbers starting with the prefix "GT" or "LG" meet NSF 61/9 Annex G Lead Requirements.

ADA Compliant

Models displaying the International Symbol of Accessibility are accessible by physically disadvantaged persons and meet all ADA/ANSI A117.1 requirements.

CalGreen Compliant

All items with this logo meet or exceed the flow rate criteria of the California Green Building Code.

CEC Compliant

All model numbers beginning with LG, G and GT's meet the requirements of the California Energy Commission.

UltraSeal™

All items with this logo include brass 1/4-turn cartridge and ceramic disc technology for lifelong leak-free operation. Retrofits into most existing widespread valve bodies.

SecurePfit™

All items with this logo include a unique fixed -hub handle which threads directly to the valve cartridge for significant structural rigidity.

WaterSense℠

We went green more than a decade ago. Our initiative with products that were certified by the Environmental Protection Agency's WaterSense program started in 2007, long before others heeded the call. Faucets engineered to reduce water consumption by 30% or more — without sacrificing performance — were crucial to us as good citizens. We'll continue to create innovations that support conscientious households, and the future of our planet.

CEC Compliant

Less usage never felt so good. With Pfister faucets, being water-wise requires no sacrifice. In fact, meeting the California Energy Commission's standards is likely unnoticeable on a daily basis. What you do know is that your shower head meets the strict WaterSense performance guidelines and that you're using significantly less water without any extra effort. Hooray for innovation that's effective and enjoyable!

CalGreen Compliant

We got this. Many Pfister products already meet or exceed the California Green Building Code. Which means that we've committed to reduce the overall use of potable water within any given building by at least 20%. This stringent measurement meets Cal Green criteria, but we're always improving to exceed current standards. Future generations can count on us.

Water Conservation

Pfister makes it easy to conserve water. Eco-Pfriendly™ aerators and inserts are available for Kitchen, Lavatory and Showerhead products. Locate your product on the following charts to choose the correct option for your water conserving needs.

Kitchen		0.5 gpm Spare Part SKU#				1.0 gpm Spare Part SKU#					1.5 gpm Spare Part SKU#			
Family	**Series**	**941-4320**	**941-8180**	**941-8190**	**941-8200**	**941-4440**	**941-4450**	**941-4500**	**941-6820**	**941-7069**	**941-6830**	**941-7079**	**941-7850**	**941-7870**
Arkitek	LG-534	•				•			•		•			
Ashfield	GT-529			•			•						•	
Ashfield	LG-531			•			•						•	
Ashfield	LG-26				•					•		•		
Ashfield	LG-72				•					•		•		
Avalon	GT-26				•					•		•		
Avalon	GT-36				•					•		•		
Briarsfield	GT-529				•					•		•		
Hanover	GT-526			•			•						•	
Hanover	GT-529			•			•						•	
Highbury	GT-529	•				•					•			
Lita	GT-529				•					•		•		
Lita	GT-72				•					•		•		
Marielle	LG-26				•					•		•		
Marielle	GT-72				•					•		•		
Marielle	LG-532				•					•		•		
Mystique	GT-529				•					•		•		
Neera	LG-529				•					•		•		
Norden	GT-529	•				•					•			
Parisa	LG-534				•					•		•		
Pfirst Series	G134-5			•			•						•	
Pfirst Series	G134-6			•			•						•	
Pfirst Series	G134-7			•			•						•	
Pfirst Series	G135-7			•			•						•	
Pfirst Series	G136-2			•			•						•	
Pfirst Series	G136-5			•			•						•	
Pfirst Series	G127			•			•						•	
Pfirst Series	G171-40			•			•						•	
Pfirst Series	G529				•					•		•		
Port Haven	GT-31				•					•		•		
Stellen	LG-529		•					•						•
Stellen	LG-529-E		•					•						•
Stellen	LG-572		•					•						•
Wheaton	GT-529				•					•		•		
Zuri	GT-529-MP				•					•		•		
Zuri	LG-529-MC				•					•		•		

Lavatory		0.35 GPM Spare Part SKU#						0.5 GPM Spare Part SKU #						1.0 GPM Spare Part SKU#					
Family	**Series**	**941-4360**	**941-4370**	**941-4380**	**941-4390**	**941-4410**	**941-7109**	**941-4320**	**941-4340**	**941-8180**	**941-8190**	**941-8200**	**941-7099**	**941-4420**	**941-4440**	**941-4480**	**941-4500**	**941-6630**	**941-7069**
Arkitek	LG-42				•							•							•
Arkitek	LG-49				•							•							•
Arterra	LG-40/ LG-42	•							•					•					
Arterra	LG-49	•							•					•					
Avalon	LG-42				•							•							•
Avalon	LG-48				•							•							•
Avalon	LG-49				•							•							•
Brislin	LG-42	•							•					•					
Bronson	LG-48	•							•					•					
Bronson	LG-49	•							•					•					
Deckard	LG-42						•						•					•	
Deckard	LG-49						•						•					•	
Contempra	LG-40/ LG-42					•				•							•		
Contempra	LG-49					•				•							•		
Iyla	LG-40/ LG-42	•							•					•					
Iyla	LG-49	•							•					•					
Kelen	LG-42MF0						•						•					•	
Kelen	LG-49MF0						•						•					•	
Marielle	LG-46					•				•							•		
Marielle	LG-49				•							•							•
Northcott	LG-42	•							•					•					
Northcott	LG-48	•							•					•					
Northcott	LG-49	•							•					•					
Parisa	LG-42				•							•							•
Park Avenue	LG-42	•							•					•					
Park Avenue	LG-49	•							•					•					
Pfirst Series	LG-142-5/6			•							•					•			
Pfirst Series	LG-142-7/8			•							•					•			
Pfirst Series	LG-143-5/6			•							•					•			
Pfirst Series	LG-143-51/61			•							•					•			
Pfirst Series	LG-148-6			•							•					•			
Pfirst Series	LG-148-7			•							•					•			
Pfirst Series	LG-149-60			•							•					•			
Pfirst Series	LG-149-6X			•							•					•			
Pfirst Modern	LG-42				•							•							•
Saxton	LG-48	•							•					•					
Saxton	LG-49	•							•					•					
Tenet	LG-42		•					•							•				
Tenet	LG-49		•					•							•				
Tisbury	LG-42	•							•					•					
Tisbury	LG-49	•							•					•					
Weller	LG-42		•					•							•				
Weller	LG-48		•					•							•				
Weller	LG-49	•							•					•					

Water Conservation – Kitchens

	Model	Finish	Case Qty	List Price
Eco-Pfriendly™ Aerator 1.75 gpm Aerator Insert	941-292Ø	N/A	1	$7
	941-293Ø	N/A	1	$7

	Model	Finish	Case Qty	List Price
Eco-Pfriendly™ Aerator 1.5 gpm Aerator Insert	941-683Ø	N/A	1	$7
	941-7Ø79	N/A	1	$7
	941-785Ø	N/A	1	$7
	941-787Ø	N/A	1	$7

Eco-Pfriendly™ Aerator 1.0 gpm Aerator Insert	941-444Ø	N/A	1	$7
	941-448Ø	N/A	1	$7
	941-682Ø	N/A	1	$7
	941-7Ø69	N/A	1	$7

Eco-Pfriendly™ Aerator 0.5 gpm Aerator Insert	941-818Ø	N/A	1	$7
	941-819Ø	N/A	1	$7
	941-82ØØ	N/A	1	$7

Water Conservation - Lavatory Faucets

	Model	Finish	Case Qty	List Price
Eco-Pfriendly™ Aerator 0.35 gpm Aerator Insert	941-436Ø	N/A	1	$7
	941-437Ø	N/A	1	$7
	941-438Ø	N/A	1	$7
	941-439Ø	N/A	1	$7
	941-441Ø	N/A	1	$7

	Model	Finish	Case Qty	List Price
Eco-Pfriendly™ Aerator 0.5 gpm Aerator Insert	941-432Ø	N/A	1	$7
	941-434Ø	N/A	1	$7
	941-818Ø	N/A	1	$7
	941-819Ø	N/A	1	$7
	941-82ØØ	N/A	1	$7

Eco-Pfriendly™ Aerator 1.0 gpm Aerator Insert	941-442Ø	N/A	1	$7
	941-444Ø	N/A	1	$7
	941-445Ø	N/A	1	$7
	941-448Ø	N/A	1	$7
	941-45ØØ	N/A	1	$7
	941-663Ø	N/A	1	$7
	941-7Ø69	N/A	1	$7

Water Conservation - Handheld & Showerheads

	Model	Finish	Case Qty	List Price
1.75 gpm Eco Pfriendly™ Showerhead Insert	941-377Ø	N/A	1	$7

	Model	Finish	Case Qty	List Price
1.5 gpm Eco Pfriendly™ Showerhead Insert	941-Ø55Ø	N/A	1	$7

FERGUSON COLLECTIONS

Briarsfield™ F-2

Tenet™ F-4

Tisbury™ F-20

Kelen™ F-32

Park Avenue™ F-46

Iyla™ F-58

Briarsfield

The Briarsfield Collection embodies heritage and craftsmanship. The heft of the spout body features a crisp taper and promises longevity and durability. Its bold appearance lends a timeless flair to this traditional faucet design.

Single Handle Pull-Down Faucet

Model	Finish	Case Qty	List Price
GT529-BFC	Polished Chrome	3	$475
GT529-BFS	Stainless Steel	3	$534
GT529-BFD	Polished Nickel	3	$534
GT529-BFY	Tuscan Bronze	3	$569

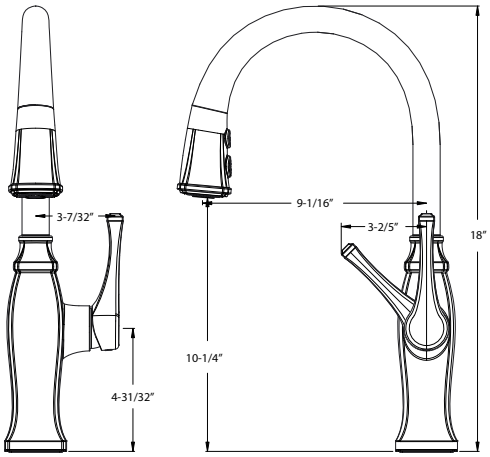

Technical Info

Holes: · 1 or 3 Hole 8" Installation

Features:
- Metal AccuDock™ Sprayhead
- Ceramic Disc Valve
- High Arc Pull-Down Swivel Spout
- Metal Lever Handle
- Three-Function Sprayhead: Stream, Spray, and Pause
- Forward Only Handle Operation
- Single Post Mounting Ring and 3-Hole 8" Deckplate Included
- Matching Soap Dispenser (sold separately KSD-T1**)
- Integrated Nylon Braided Supply Lines with 3/8" Threaded Compression Fittings
- 1.8 gpm @ 60 psi

Single Handle Pull-Down Prep Faucet

GT572-BFC	Polished Chrome	3	$452
GT572-BFS	Stainless Steel	3	$511
GT572-BFD	Polished Nickel	3	$511
GT572-BFY	Tuscan Bronze	3	$569

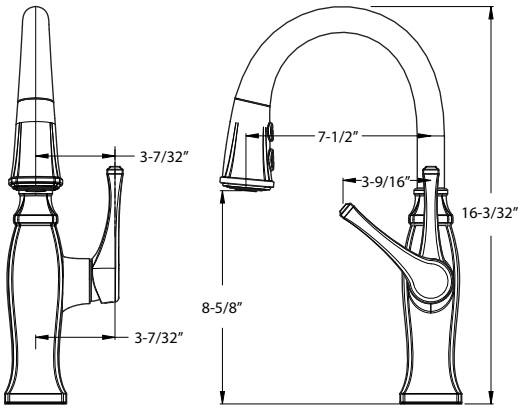

Holes: · 1 or 3-Hole 4" Installation

Features:
- Metal AccuDock™ Sprayhead
- Ceramic Disc Valve
- High Arc Pull-Down Swivel Spout
- Metal Lever Handle
- Three-Function Sprayhead: Stream, Spray, and Pause
- Forward Only Handle Operation
- Single Post Mounting Ring and 3-Hole Deckplate Included
- Matching Soap Dispenser (sold separately KSD-T1**)
- Integrated Nylon Braided Supply Lines with 3/8" Threaded Compression Fittings
- 1.8 gpm @ 60 psi

Soap Dispenser Kit

KSD-T1CC	Polished Chrome	3	$173
KSD-T1SS	Stainless Steel	3	$191
KSD-T1DD	Polished Nickel	3	$191
KSD-T1YY	Tuscan Bronze	3	$209

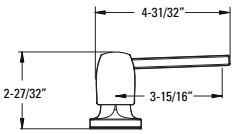

Holes: · 1-Hole Installation

Features:
- Easy Above Counter Refill
- Anti-Residue Design Prevents Soap/Lotion Buildup
- Matching Pfister Briarsfield Faucet
- All Metal Soap Pump

CEC Compliant | Cal Green Compliant | NSF Lead-Free Certified | ADA Compliant | Accudock™

Ferguson

Tenet

TENET

MODERN LIFESTYLE, DISTILLED INTO A SOPHISTICATED COLLECTION.

If you've taken a look around and decided that excess is just that —clarity of purpose comes shining through. The things you choose to adorn your space become carefully cultivated, and not just arbitrary accumulation. This all-brass modern collection is for the true minimalist who values perfect proportion and extremely precise functionality. Faucet levers and cross handles sit tightly flush, a feat of inner engineering that allows for crisp lines and a tidy footprint. The shower-integrated rail has been thoughtfully designed for ease of installation, complementing a 'just right' 8" rain showerhead. Exactly what you need with nothing that you don't, this collection is premium, through and through. The epitome of simplicity, TENET proves what you already know: every detail counts.

Single Control Lavatory
LG42-TNTC

8" Widespread Lavatory
LG49-TNTC

8" Widespread Lavatory
Shown with Optional Cross Handles
HHL-049TNTC

Two Handle Wall Mount Lavatory
LG49-TNT2C

Two Handle Wall Mount Lavatory
Shown with Optional Cross Handles
HHL-492TNTC

Single Hole Free-Standing Tub Filler with Hand Shower
LG6-1TNTC

Tub & Shower
LG89-8TNTC

Shower Only
LG89-7TNTC

Valve Only
R89-1TNTC

Tub & Shower
Shown with Optional Cross Handle
HHL-089TNTC

Diverter Trim
Ø16-TNT1C

Diverter Trim
Shown with Optional Cross Handle
HHL-016TNTC

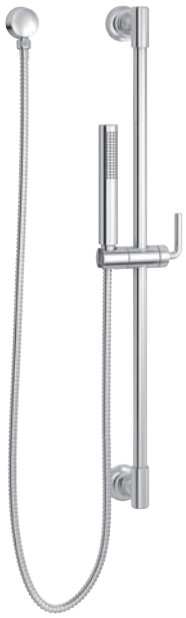

Slide Bar/
Hand Shower Kit
LG16-3TNTC

Slide Bar/
Hand Shower Kit
Shown with Optional Cross Handle
HHL-G16TNTC

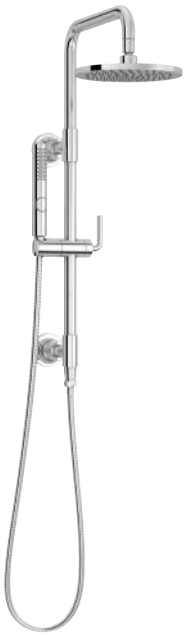

Shower
Integrated Rail
LG16-TNTC

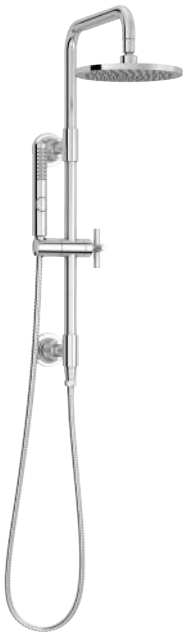

Shower
Integrated Rail
Shown with Optional Cross Handle
HHL-LG16TNTC

Accessories

18" & 24" Towel Bar
BTB-1TNTC & BTB-2TNTC

Towel Ring
BRB-TNTC

Paper Holder
BPH-TNTC

Robe Hook
BRH-TNTC

Tenet™ - Lavatory Faucets

Single Control Lavatory

Model	Finish	Case Qty	List Price
LG42-TNTC	Polished Chrome	3	$350
LG42-TNTK	Brushed Nickel	3	$491
LG42-TNTB	Matte Black	3	$501
LG42-TNTBG	Brushed Gold	3	$512

Technical Info

Holes: · 1 or 3-Hole 4" Installation

Features:
- Ceramic Disc Valve
- Metal Lever Handle
- Single Post Mounting Ring
- 3-Hole Deckplate Sold Separately 961-235*
- All Metal Pop-Up
- 1.2 gpm @ 60 psi

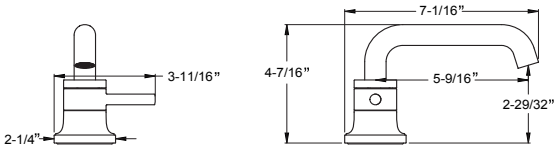

8" Widespread Lavatory

LG49-TNTC	Polished Chrome	3	$468
LG49-TNTK	Brushed Nickel	3	$668
LG49-TNTB	Matte Black	3	$673
LG49-TNTBG	Brushed Gold	3	$683

Holes: · 3-Hole 8-15" Installation

Features:
- Ceramic Disc Valves
- Metal Lever Handles
- All Metal Pop-Up
- Quick Connect Hose Assembly
- Optional Cross Handles LG49TNT2*
- 1.2 gpm @ 60 psi

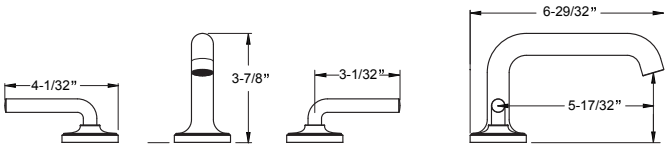

Optional Cross Handle - Widespread

HHL-492TNTC	Polished Chrome	12	$37
HHL-492TNTK	Brushed Nickel	12	$48
HHL-492TNTB	Matte Black	12	$48
HHL-492TNTBG	Brushed Gold	12	$53

Features:
- Easy Install on Tenet Widespread LG49-TNT*
- Sold as a Pair

How to Order a Cross Handle Lavatory Faucet

Cross Handle
HHL-Ø49TNT*

+

8" Widespread
LG49-TNT*

=

Complete Faucet

CEC Compliant · Cal Green Compliant · Meets EPA WaterSense℠ Standards · NSF Lead-Free Certified · ADA Compliant · UltraSeal™ · SecurePfit™

8" Wall Mount Lavatory

Model	Finish	Case Qty	List Price
LG49-TNT2C	Polished Chrome	3	$350
LG49-TNT2K	Brushed Nickel	3	$555
LG49-TNT2B	Matte Black	3	$560
LG49-TNT2BG	Brushed Gold	3	$571

Technical Info

Holes: · 3-Hole 8-15" Installation

Features:
- Ceramic Disc Valves
- Metal Lever Handles
- Grid Strainer Sold Seperately
- 1.2 gpm @ 60 psi
- Optional Cross Handles LG49TNT2*

Must Order Wall Mount Rough In Valve Separately. See Valve Section.

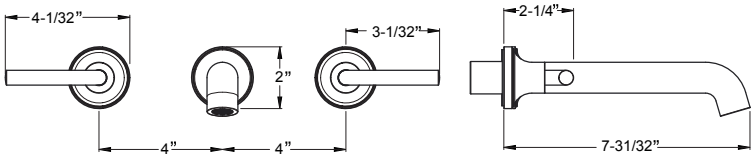

Optional Cross Handle - Widespread

HHL-492TNTC	Polished Chrome	12	$36
HHL-492TNTK	Brushed Nickel	12	$46
HHL-492TNTB	Matte Black	12	$46
HHL-492TNTBG	Brushed Gold	12	$51

Features:
- Easy Install on Tenet Widespread LG49-TNT2*
- Sold as a Pair

How to Order a Cross Handle Lavatory Faucet

Cross Handle
HHL-Ø49TNT*

+

8" Widespread
LG49-TNT2*

=

Complete Faucet

CEC Compliant · Cal Green Compliant · Meets EPA WaterSense℠ Standards · NSF Lead-Free Certified · ADA Compliant · UltraSeal™ · SecurePfit™

Tenet™ - Tub Filler

Single Hole Free-Standing Tub Filler with Hand Shower

Model	Finish	Case Qty	List Price
LG6-1TNTC	Polished Chrome	1	$1,873
LG6-1TNTK	Brushed Nickel	1	$2,038
LG6-1TNTB	Matte Black	1	$2,199
LG6-1TNTBG	Brushed Gold	1	$2,380

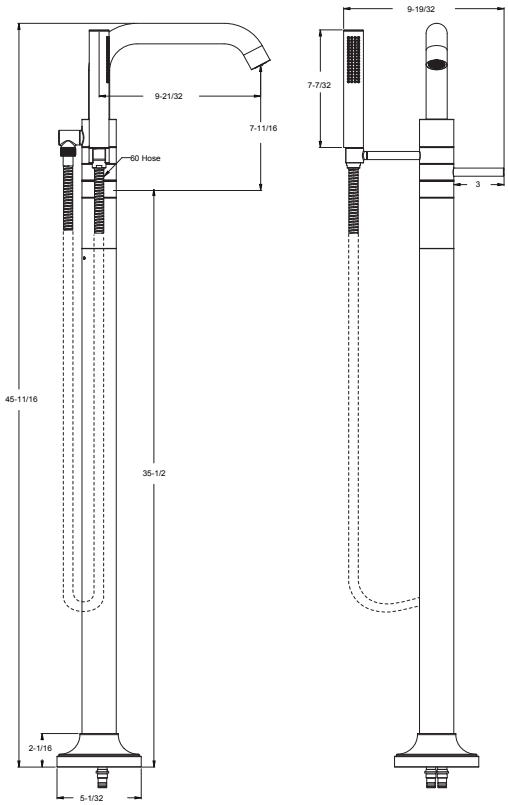

Technical Info

Holes:
- 1-Hole Installation

Features:
- Modern Design
- Ceramic Disc Valve
- Metal Lever Handle
- Integrated Handshower Diverter Handle
- Brass Construction
- 6 gpm @ 60 psi
- Hand Shower 1.8 gpm @ 80 psi

Must Order Free-Standing Rough In Valve Separately.
See Valve Section.

CEC Compliant | Cal Green Compliant | Meets EPA WaterSense℠ Standards | NSF Lead-Free Certified | ADA Compliant | UltraSeal™ | SecurePfit™

Pressure Balance Tub & Shower Trim

Model	Finish	Case Qty	List Price
LG89-8TNTC	Polished Chrome	3	$458
LG89-8TNTK	Brushed Nickel	3	$512
LG89-8TNTB	Matte Black	3	$619
LG89-8TNTBG	Brushed Gold	3	$646

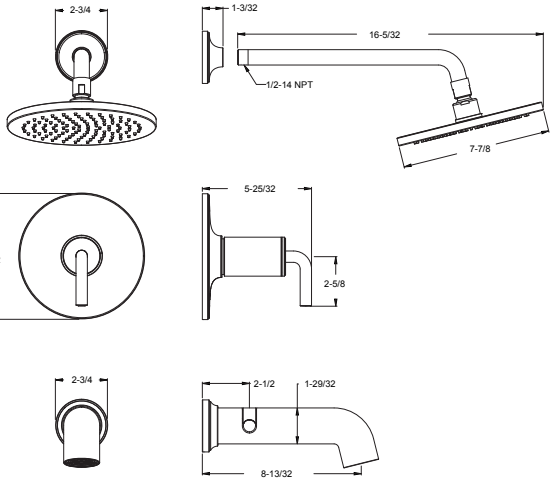

Technical Info

Features:
- SecurePfit™
- Metal Lever Handle
- Hot/Cold Indicator
- All Brass Showerhead
- Easy to Clean Spray Nozzles
- 7" IP & Quick Connect Diverted Tub Spout
- Optional Cross Handle HHL-Ø89TNT*
- Showerhead 1.8 gpm @ 80 psi

Must Order Pressure Balance Rough in Valve Separately. See Valve Section.

Pressure Balance Tub

LG89-7TNTC	Polished Chrome	3	$350
LG89-7TNTK	Brushed Nickel	3	$431
LG89-7TNTB	Matte Black	3	$484
LG89-7TNTBG	Brushed Gold	3	$512

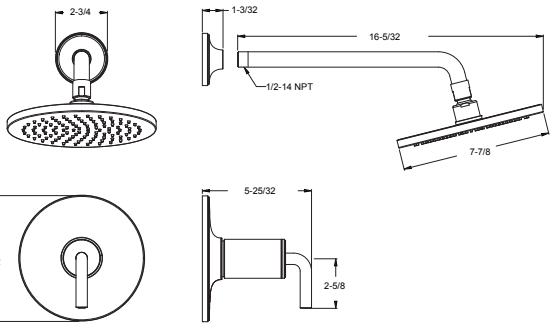

Features:
- SecurePfit™
- Metal Lever Handle
- Hot/Cold Indicator
- All Brass Showerhead
- Easy to Clean Spray Nozzles
- 7" IP & Quick Connect Diverted Tub Spout
- Optional Cross Handle HHL-Ø89TNT*
- Showerhead 1.8 gpm @ 80 psi

Must Order Pressure Balance Rough in Valve Separately. See Valve Section.

Pressure Balance Valve Only Trim

R89-1TNTC	Polished Chrome	3	$189
R89-1TNTK	Brushed Nickel	3	$243
R89-1TNTB	Matte Black	3	$259
R89-1TNTBG	Brushed Gold	3	$269

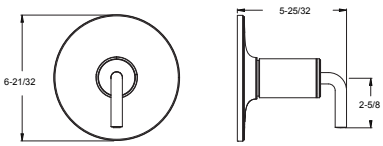

Features:
- SecurePfit™
- Metal Lever Handle
- Hot/Cold Indicator
- Optional Cross Handle HHL-089TNT*

Must Order Pressure Balance Rough in Valve Separately. See Valve Section.

CEC Compliant | Cal Green Compliant | Meets EPA WaterSense℠ Standards | NSF Lead-Free Certified | ADA Compliant | UltraSeal™ | SecurePfit™

Tenet™ - Tub & Shower

	Model	Finish	Case Qty	List Price
Pressure Balance Optional Cross Handle - Tub & Shower	HHL-Ø89TNTC	Polished Chrome	12	$28
	HHL-Ø89TNTK	Brushed Nickel	12	$38
	HHL-Ø89TNTB	Matte Black	12	$38
	HHL-Ø89TNTBG	Brushed Gold	12	$44

Technical Info

Features:
- Optional Cross Handle
- Easy Install on Tub & Shower Trim, LG89-8TNT*, LG89-7TNT*, and R89-1TNT*

How to Order a Cross Handle Shower Trim

Cross Handle
HHL-Ø89TNT*

+

Valve Trim
LG89-8TNT*
LG89-7TNT*
R89-1TNT*

=

Complete Pressure Balance Shower Trim

Diverter Trim Only	Ø16-TNT1C	Polished Chrome	3	$114
	Ø16-TNT1K	Brushed Nickel	3	$156
	Ø16-TNT1B	Matte Black	3	$175
	Ø16-TNT1BG	Brushed Gold	3	$189

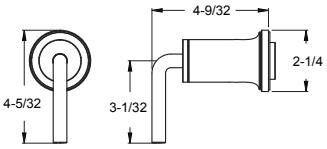

Features:
- SecurePfit™
- Metal Lever Handle and Matching Flange
- Can be Used with Ø15-2WDX for Cal Green Compliant Applications
- Optional Cross Handle HHL-Ø16TNT*

Must Order Ø15-4WDX or Ø15-2WDX Rough In Valve Separately. See Valve Section.

Optional Cross Handle - Diverter Trim	HHL-Ø16TNTC	Polished Chrome	12	$27
	HHL-Ø16TNTK	Brushed Nickel	12	$37
	HHL-Ø16TNTB	Matte Black	12	$37
	HHL-Ø16TNTBG	Brushed Gold	12	$43

Features:
- Optional Cross Handle
- Easy Install on Diverter Handle, Ø16-TNT1*

How to Order a Cross Handle Diverter Trim

Cross Handle
HHL-Ø16TNT*

+

Diverter Trim
Ø16-TNT1*

=

Complete Diverter Trim

CEC Compliant | Cal Green Compliant | Meets EPA WaterSense℠ Standards | NSF Lead-Free Certified | ADA Compliant | UltraSeal™ | SecurePfit™

Slide Bar/Hand Shower Kit

Model	Finish	Case Qty	List Price
LG16-3TNTC	Polished Chrome	3	$350
LG16-3TNTK	Brushed Nickel	3	$463
LG16-3TNTB	Matte Black	3	$541
LG16-3TNTBG	Brushed Gold	3	$564

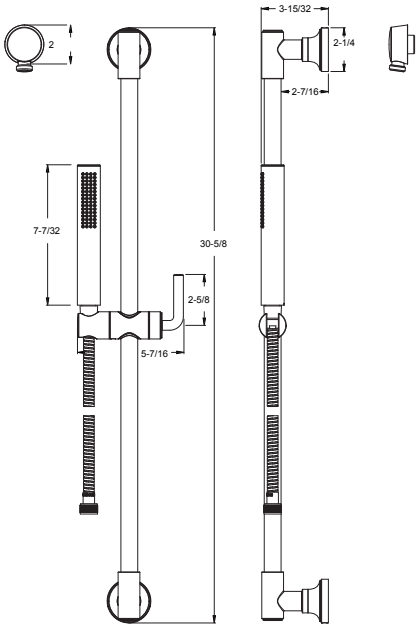

Technical Info

Features:

- Complete Slide Bar Package with Handheld Shower, Hose, Drop Elbow, Slide Bar, and Wall Mount Bracket
- All Metal Slide Bar
- Optional Cross Handle HHL-G16TNT*
- Easy To Clean Spray Nozzles
- 60" Metal Hose with Matching Finish
- Back Flow Prevention
- Works with Tenet Diverter Trim and Valve
- Not to Be Used as a Grab Bar
- Hand Shower 1.8 gpm @ 80 psi

Optional Cross Handle - Slide Bar/Hand Shower Kit

HHL-G16TNTC	Polished Chrome	12	$28
HHL-G16TNTK	Brushed Nickel	12	$38
HHL-G16TNTB	Matte Black	12	$38
HHL-G16TNTBG	Brushed Gold	12	$44

Features:

- Optional Cross Handle for Tenet Slide Bar Kit, LG16-3TNT*
- Easy Install On Slide Bar Kit

How to Order a Cross Handle Slide Bar Kit

Cross Handle
HHL-G16TNT*

+

Slide Bar Kit
LG16-3TNT*

=

Complete Slide Bar Kit

CEC Compliant | Cal Green Compliant | Meets EPA WaterSense℠ Standards | NSF Lead-Free Certified | ADA Compliant | UltraSeal™ | SecurePfit™

Tenet™ - Tub & Shower

Shower Integrated Rail

Model	Finish	Case Qty	List Price
LG16-TNTC	Polished Chrome	3	$556
LG16-TNTK	Brushed Nickel	3	$657
LG16-TNTB	Matte Black	3	$733
LG16-TNTBG	Brushed Gold	3	$758

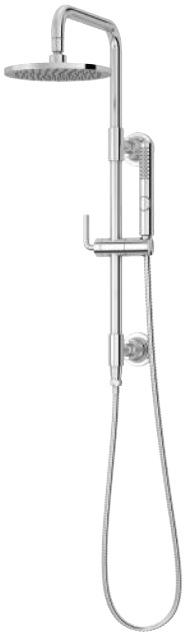

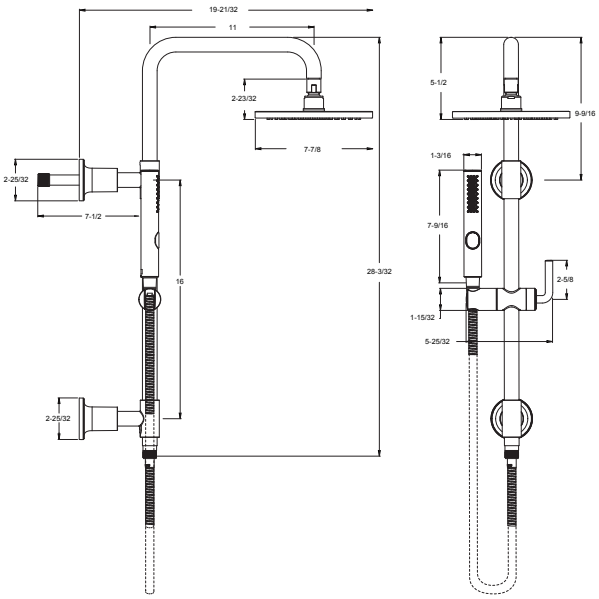

Technical Info

Features:
- Complete Shower Integrated Rail with Handheld
- All Metal Slide Bar
- Optional Cross Handle HHL-LG16TNTC*
- Easy Installation for Retrofit or New Construction
- Easy to Clean Spray Nozzles
- 60" Metal Hose with Matching Finish
- Back Flow Prevention
- All Brass Showerhead
- Not to Be Used as a Grab Bar
- Includes Typical Installation Hardware
- Hand Shower 1.8 gpm @ 80 psi

Optional Cross Handle - Integrated Rail

HHL-LG16TNTC	Polished Chrome	12	$28
HHL-LG16TNTK	Brushed Nickel	12	$38
HHL-LG16TNTB	Matte Black	12	$38
HHL-LG16TNTBG	Brushed Gold	12	$44

Features:
- Optional Cross Handle
- Easy Install on Slide Bar Kit LG16-3TNT*

How to Order a Cross Handle Shower Integrated Rail

Cross Handle
HHL-LG16TNT*

+

Integrated Rail
LG16-TNT*

=

Complete Integrated Rail

CEC Compliant | Cal Green Compliant | Meets EPA WaterSense℠ Standards | NSF Lead-Free Certified | ADA Compliant | UltraSeal™ | SecurePfit™

Raincan Showerhead

Model	Finish	Case Qty	List Price
973-264A	Polished Chrome	3	$151
973-264J	Brushed Nickel	3	$166
973-264B	Matte Black	1	$203
973-264BG	Brushed Gold	1	$227

Technical Info

Features:
- Raincan Showerhead
- Easy To Clean Spray Nozzles
- Shower Arm and Flange Sold Separately
- Order 941-Ø55Ø for 1.5 gpm Showerhead Insert
- Showerhead 1.8 gpm @ 80 psi

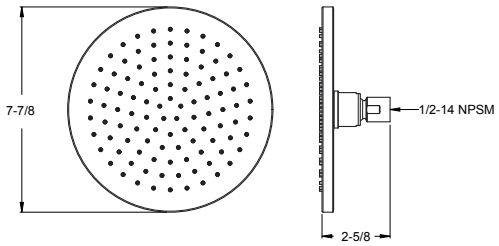

Shower Flange

96Ø-358A	Polished Chrome	1	$16.50
96Ø-358J	Brushed Nickel	1	$18.20
96Ø-358B	Matte Black	1	$20.20
96Ø-358BG	Brushed Gold	1	$20.10

Features:
- All Metal
- Matches Finish and Style

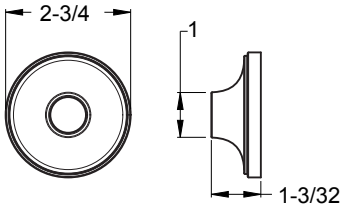

CEC Compliant | Cal Green Compliant | Meets EPA WaterSense℠ Standards | NSF Lead-Free Certified | ADA Compliant | UltraSeal™ | SecurePfit™

Tenet™ - Tub & Shower

Straight Shower Arm

Model	Finish	Case Qty	List Price
973-284A	Polished Chrome	1	$73.40
973-284J	Brushed Nickel	1	$79.10
973-284B	Matte Black	1	$86.00
973-284BG	Brushed Gold	1	$85.50

Technical Info

Features:
- 12" Shower Arm
- Brass Shower Arm
- 1/2" NPT Male Connections

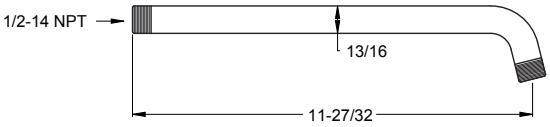

Tub Spout

92Ø-291A	Polished Chrome	1	$200.60
92Ø-291J	Brushed Nickel	1	$234.40
92Ø-291B	Matte Black	1	$231.70
92Ø-291BG	Brushed Gold	1	$215.90

Features:
- All Metal
- IP & Quick Connect Diverted Spout
- Integrated Diverter

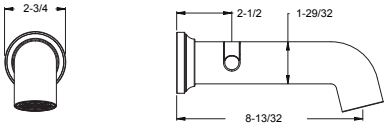

60" Hose

951-335A	Polished Chrome	6	$47.00
951-335J	Brushed Nickel	6	$110.00
951-335B	Matte Black	6	$159.00
951-335BG	Brushed Gold	6	$193.00

Features:
- 60" Anti-Twist Hose
- Matching Finish Metal Hose

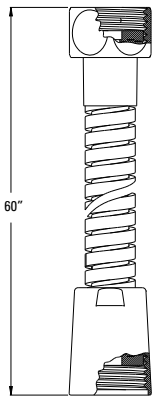

Round Drop Elbow

Model	Finish	Case Qty	List Price
973-272A	Polished Chrome	8	$40
973-272J	Brushed Nickel	8	$61
973-272B	Matte Black	8	$85
973-272BG	Brushed Gold	8	$94

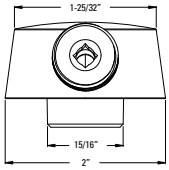

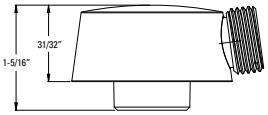

Technical Info

Features:
- 1/2" IP Connection
- Matching Finish

Hand Shower

973-28ØA	Polished Chrome	12	$71.90
973-28ØJ	Brushed Nickel	12	$84.20
973-28ØB	Matte Black	12	$92.50
973-28ØBG	Brushed Gold	12	$96.00

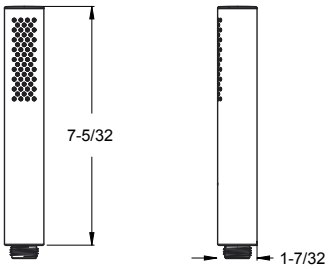

Features:
- Easy To Clean Spray Nozzles
- Matching Finish
- Hand Shower 1.8 gpm @ 80 psi

Integrated Rail Handshower

973-283A	Polished Chrome	12	$60.60
973-283J	Brushed Nickel	12	$72.90
973-283B	Matte Black	12	$88.60
973-283BG	Brushed Gold	12	$83.00

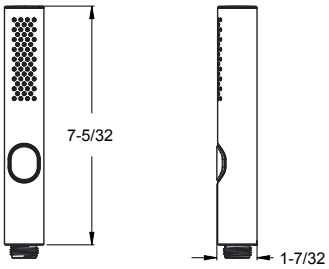

Features:
- 3-Function Hand Shower
- Easy To Clean Spray Nozzles
- Matching Finish
- Hand Shower 1.8 gpm @ 80 psi

CEC Compliant | Cal Green Compliant | Meets EPA WaterSense℠ Standards | NSF Lead-Free Certified | ADA Compliant | UltraSeal™ | SecurePfit™

Tenet™ - Accessories

18" Towel Bar

Model	Finish	Case Qty	List Price
BTB-1TNTC	Polished Chrome	6	$116
BTB-1TNTK	Brushed Nickel	6	$127
BTB-1TNTB	Matte Black	6	$138
BTB-1TNTBG	Brushed Gold	6	$148

Technical Info

Holes: · 2-Hole Installation

Features:
· Premium Metal Construction
· Superior Mounting Posts
· Concealed Screw Installation
· Mounting Hardware Included

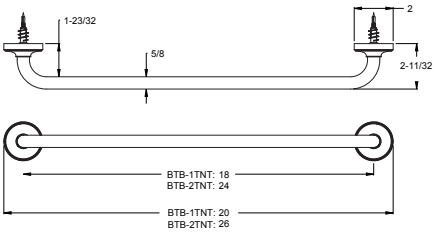

24" Towel Bar

BTB-2TNTC	Polished Chrome	6	$168
BTB-2TNTK	Brushed Nickel	6	$179
BTB-2TNTB	Matte Black	6	$189
BTB-2TNTBG	Brushed Gold	6	$200

Holes: · 2-Hole Installation

Features:
· Premium Metal Construction
· Superior Mounting Posts
· Concealed Screw Installation
· Mounting Hardware Included

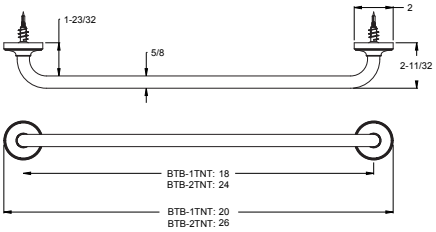

Towel Ring

BRB-TNTC	Polished Chrome	8	$89
BRB-TNTK	Brushed Nickel	8	$100
BRB-TNTB	Matte Black	8	$111
BRB-TNTBG	Brushed Gold	8	$122

Holes: · 1-Hole Installation

Features:
· Premium Metal Construction
· Superior Mounting Posts
· Concealed Screw Installation
· Mounting Hardware Included

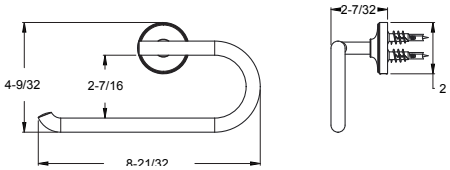

Paper Holder

Model	Finish	Case Qty	List Price
BPH-TNTC	Polished Chrome	8	$87
BPH-TNTK	Brushed Nickel	8	$103
BPH-TNTB	Matte Black	8	$114
BPH-TNTBG	Brushed Gold	8	$125

Technical Info

Holes: · 2-Hole Installation

Features:
· Premium Metal Construction
· Pivot Swing Paper Mount
· Concealed Screw Installation
· Mounting Hardware Included

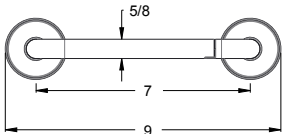

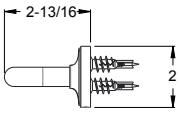

Robe Hook

Model	Finish	Case Qty	List Price
BRH-TNTC	Polished Chrome	12	$61
BRH-TNTK	Brushed Nickel	12	$71
BRH-TNTB	Matte Black	12	$82
BRH-TNTBG	Brushed Gold	12	$92

Holes: · 1-Hole Installation

Features:
· Premium Metal Construction
· Superior Mounting Posts
· Concealed Screw Installation
· Mounting Hardware Included

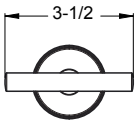

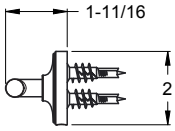

Tisbury

Tisbury is the ultimate classic bath collection. Grace in action, this expansive line of extraordinary fixtures and faucets showcases complementary elements ranging from robe hooks to free-standing tub fillers. Styled with the elegance of golden-era travel, each piece is made of all-brass construction for lasting performance and effortless functionality. The very best of old-world craftsmanship blends with the latest technology to offer you endless customizable combinations.

Single Control Lavatory
LG42-TBØC

8" Widespread Lavatory
LG49-TBØC

8" Widespread Lavatory
Shown with Optional Cross Handles
HHL-Ø49TBC

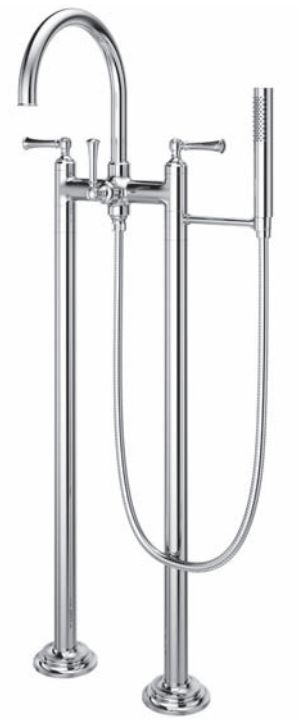

Traditional Free-Standing Tub Filler with Hand Shower
LG6-1TBC

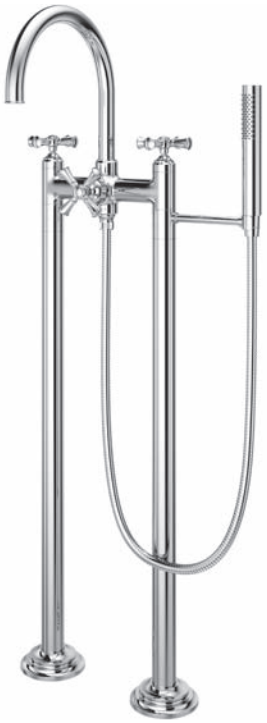

Traditional
Free-Standing Tub Filler
Shown with Optional Cross Handles
HHL-LG6TBC

Tub Filler Riser Support Kit
931-133A

Deck Mount Tub Filler
with Hand Shower
LG6-2TBC

Deck Mount Tub Filler
with Hand Shower
Shown with Optional Cross Handles
HHL-LG6TBC

Wall Mount Tub Filler
with Hand Shower
LG6-3TBC

Wall Mount Tub Filler
with Hand Shower
Shown with Optional Cross Handles
HHL-LG6TBC

Tub & Shower
LG89-8TBC

Shower Only
LG89-7TBC

Valve Only
R89-1TBC

Tub & Shower
Shown with Optional Cross Handle
HHL-Ø89TBC

Diverter Trim
Ø16-TB1C

Diverter Trim
Shown with Optional Cross Handle
HHL-Ø16TTBC

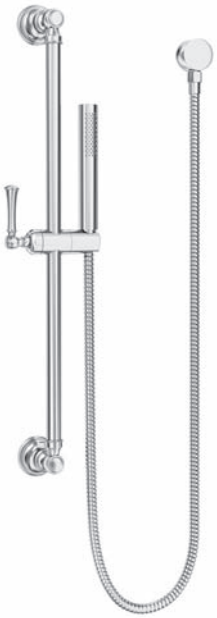

Slide Bar/
Hand Shower Kit
LG16-3TBC

Slide Bar/ Hand Shower Kit
Shown with Optional Cross Handle
HHL-G16TBC

Accessories

24" Towel Rack
BTR-TB2C

18" Towel Bar &
24" Double Towel Bar
BTB-TB1C & BTB-TB2C

Towel Ring
BRB-TBØC

Paper Holder
BPH-TBØC

Robe Hook
BRH-TBØC

Single Control Lavatory

Model	Finish	Case Qty	List Price
LG42-TBØC	Polished Chrome	3	$330
LG42-TBØK	Brushed Nickel	3	$445
LG42-TBØD	Polished Nickel	3	$445
LG42-TBØY	Tuscan Bronze	3	$480
LG42-TBØBG	Brushed Gold	3	$539

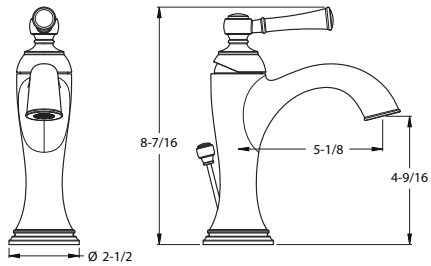

Technical Info

Holes: · 1 or 3-Hole 4" Installation

Features:
- Ceramic Disc Valve
- Metal Lever Handle
- Single Post Mounting Ring
- 3-Hole Deckplate Sold Separately 961-223*
- All Metal Pop-Up
- 1.2 gpm @ 60 psi

8" Widespread Lavatory

LG49-TBØC	Polished Chrome	3	$453
LG49-TBØK	Brushed Nickel	3	$649
LG49-TBØD	Polished Nickel	3	$649
LG49-TBØY	Tuscan Bronze	3	$678
LG49-TBØBG	Brushed Gold	3	$760

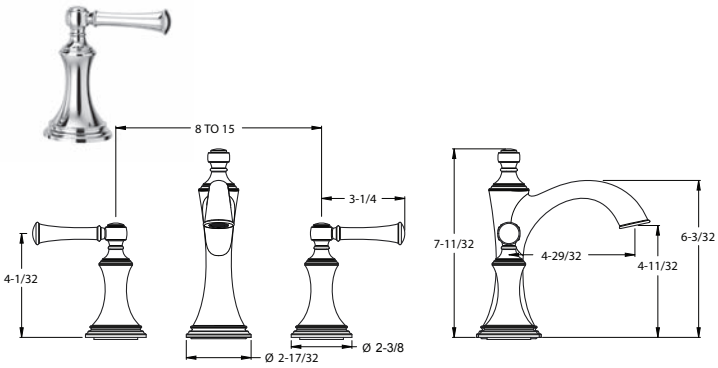

Holes: · 3-Hole 8-15" Installation

Features:
- Ceramic Disc Valves
- Metal Lever Handles
- All Metal Pop-Up
- Quick Connect Hose Assembly
- Order 971-Ø86Ø to Increase Max. Install Depth to 3"
- Optional Cross Handles Available HHL-Ø49TB*
- Both Finished Matched Metal And White Ceramic Hot/Cold Handle Inserts Included
- 1.2 gpm @ 60 psi

Optional Cross Handle - Widespread

HHL-Ø49TBC	Polished Chrome	3	$38
HHL-Ø49TBK	Brushed Nickel	3	$49
HHL-Ø49TBD	Polished Nickel	3	$49
HHL-Ø49TBY	Tuscan Bronze	3	$55
HHL-Ø49TBBG	Brushed Gold	3	$63

Features:
- Easy Install on Tisbury Widespread LG49TBØ*
- Sold as a Pair

How to Order a Cross Handle Lavatory Faucet

Cross Handle
HHL-Ø49TB*

+

8" Widespread
LG49-TBØ*

=

Complete Faucet

CEC Compliant · Cal Green Compliant · Meets EPA WaterSense℠ Standards · NSF Lead-Free Certified · ADA Compliant · UltraSeal™ · SecurePfit™

Tisbury™ - Tub Fillers

Traditional Free-Standing Tub Filler with Hand Shower

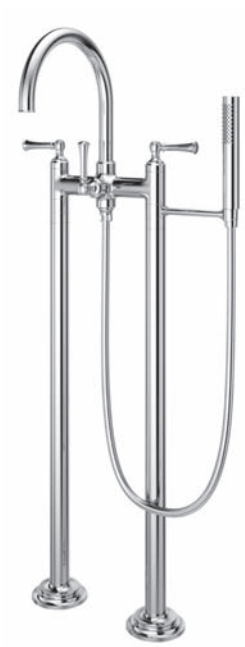

Model	Finish	Case Qty	List Price
LG6-1TBC	Polished Chrome	1	$1,371
LG6-1TBK	Brushed Nickel	1	$1,600
LG6-1TBD	Polished Nickel	1	$1,599
LG6-1TBY	Tuscan Bronze	1	$1,848
LG6-1TBBG	Brushed Gold	1	$2,071

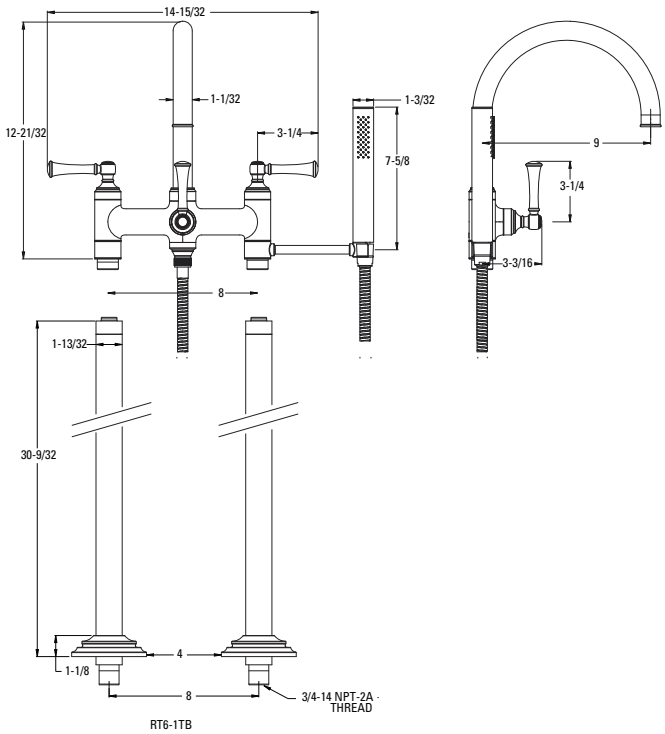

Technical Info

Holes: · 2-Hole Installation

Features:
- Traditional Double Riser Tub Filler
- Ceramic Disc Valves
- Metal Lever Handles
- Brass Construction
- Includes Risers
- Optional Cross Handles Available HHL-LG6TB*
- Both Finished Matched Metal and White Ceramic Hot/Cold Diverter Inserts Included
- 10 gpm @ 60 psi
- Hand Shower 1.8 gpm @ 80 psi

Must Order Free-Standing Rough In Valve Separately.
See Valve Section.

Deck Mount Tub Filler with Hand Shower

LG6-2TBC	Polished Chrome	1	$982
LG6-2TBK	Brushed Nickel	1	$1,216
LG6-2TBD	Polished Nickel	1	$1,216
LG6-2TBY	Tuscan Bronze	1	$1,262
LG6-2TBBG	Brushed Gold	1	$1,415

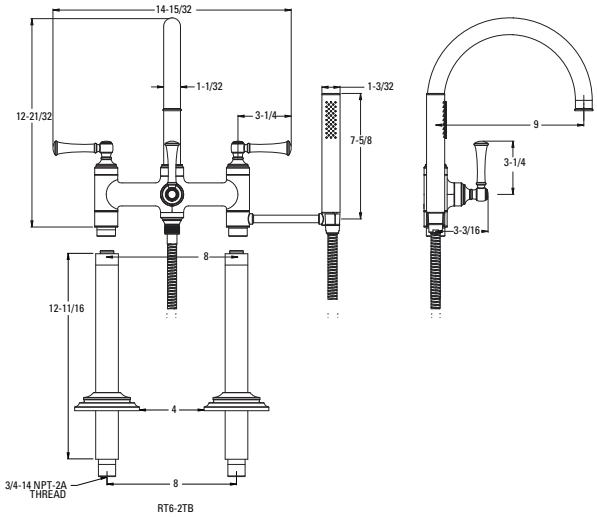

Holes: · 2-Hole Installation

Features:
- Traditional Double Riser Tub Filler
- Ceramic Disc Valves
- Metal Lever Handles
- Brass Construction
- Includes Deck Mount Installation Adaptors
- Optional Cross Handles Available HHL-LG6TB*
- Both Finished Matched Metal and White Ceramic Hot/Cold/ Diverter Inserts Included
- 10 gpm @ 60 psi
- Hand Shower 1.8 gpm @ 80 psi

Can Be Used With The Free-Standing Rough In Valve.
See Valve Section.

CEC Compliant · Cal Green Compliant · Meets EPA WaterSense℠ Standards · NSF Lead-Free Certified · ADA Compliant · UltraSeal™ · SecurePfit™

Wall Mount Tub Filler with Hand Shower

Model	Finish	Case Qty	List Price
LG6-3TBC	Polished Chrome	1	$982
LG6-3TBK	Brushed Nickel	1	$1,216
LG6-3TBD	Polished Nickel	1	$1,216
LG6-3TBY	Tuscan Bronze	1	$1,262
LG6-3TBBG	Brushed Gold	1	$1,415

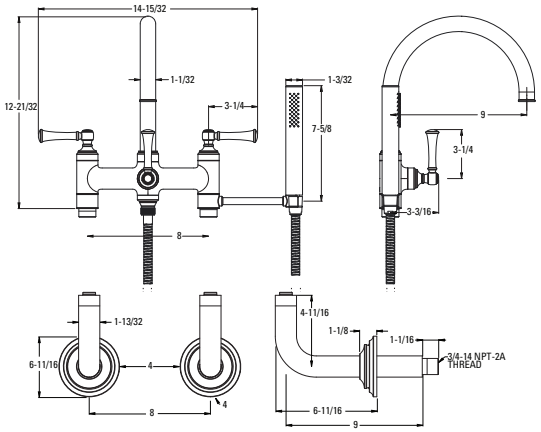

Technical Info

Holes: · 2-Hole Installation

Features:
- Traditional Double Riser Tub Filler
- Ceramic Disc Valves
- Metal Lever Handles
- Brass Construction
- Includes Wall Mount Installation Adaptors
- Optional Cross Handles Available HHL-LG6TB*
- Optional Rough In Valve - Order ØX6-34ØR
- Both Finished Matched Metal and White Ceramic Hot/Cold/Diverter Inserts Included
- 10 gpm @ 60 psi
- Hand Shower 1.8 gpm @ 80 psi

Can Be Used With The Free-Standing Rough In Valve. See Valve Section.

Tub Filler Riser Support Kit

931-133A	Polished Chrome	3	$117
931-133J	Brushed Nickel	3	$145
931-133D	Polished Nickel	3	$145
931-133Y	Tuscan Bronze	3	$174
931-133BG	Brushed Gold	3	$165

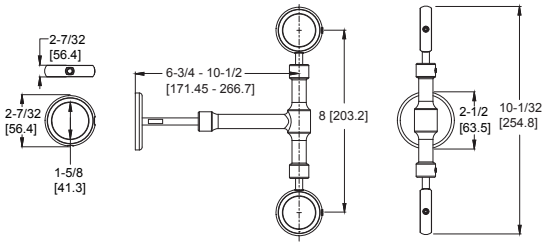

Features:
- Wall or Overflow Connection Included
- Support System to Reduce Wobble

Optional Cross Handle - Tub Filler

HHL-LG6TBC	Polished Chrome	3	$61
HHL-LG6TBK	Brushed Nickel	3	$72
HHL-LG6TBD	Polished Nickel	3	$72
HHL-LG6TBY	Tuscan Bronze	3	$80
HHL-LG6TBBG	Brushed Gold	3	$91

Features:
- Easy Install on Tisbury Tub Fillers, LG6-1TB*, LG6-2TB*, and LG3-3TB*
- Sold as Group Hot/Cold/Diverter

How to Order a Cross Handle Tub Filler

Cross Handle
HHL-LG6TB*

+

Tub Filler
LG6-1TB*

=

Complete Tub Filler

CEC Compliant · Cal Green Compliant · Meets EPA WaterSense℠ Standards · NSF Lead-Free Certified · ADA Compliant · UltraSeal™ · SecurePfit™

Tisbury™ - Tub & Shower

Pressure Balance Tub & Shower Trim

Model	Finish	Case Qty	List Price
LG89-8TBC	Polished Chrome	3	$409
LG89-8TBK	Brushed Nickel	3	$531
LG89-8TBD	Polished Nickel	3	$531
LG89-8TBY	Tuscan Bronze	3	$604
LG89-8TBBG	Brushed Gold	3	$678

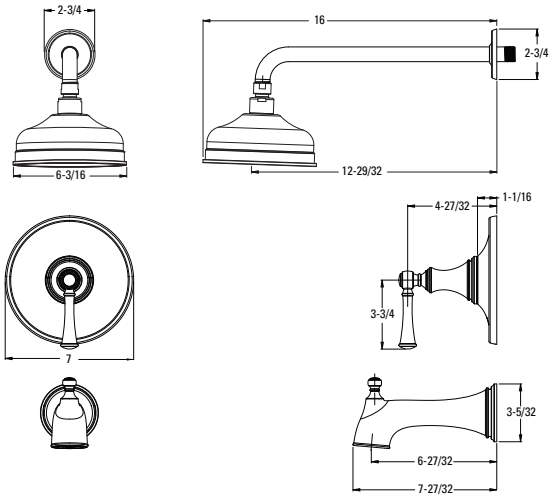

Technical Info

Features:
- SecurePfit™
- Metal Lever Handle
- Hot/Cold Indicator
- All Brass Showerhead
- Easy to Clean Spray Nozzles
- 7" IP & Quick Connect Diverted Tub Spout
- Optional Cross Handle HHL-Ø89TB*
- Both Finished Matched Metal and Ceramic Caps Included
- Showerhead 1.8 gpm @ 80 psi

Must Order Pressure Balance Rough in Valve Separately. See Valve Section.

Pressure Balance Shower Trim

LG89-7TBC	Polished Chrome	3	$370
LG89-7TBK	Brushed Nickel	3	$460
LG89-7TBD	Polished Nickel	3	$460
LG89-7TBY	Tuscan Bronze	3	$545
LG89-7TBBG	Brushed Gold	3	$612

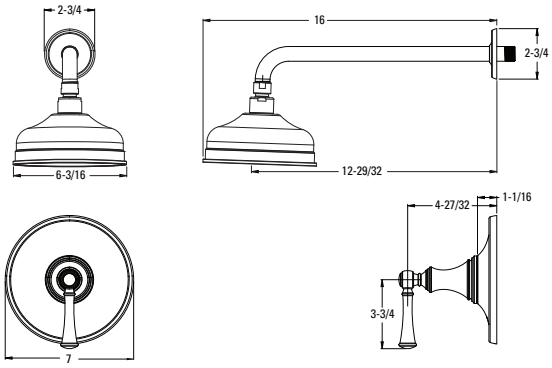

Features:
- SecurePfit™
- Metal Lever Handle
- Hot/Cold Indicator
- All Brass Showerhead
- Easy to Clean Spray Nozzles
- Optional Cross Handle HHL-Ø89TB*
- Both Finished Matched Metal and Ceramic Caps Included
- Showerhead 1.8 gpm @ 80 psi

Must Order Pressure Balance Rough in Valve Separately. See Valve Section.

Pressure Balance Valve Only Trim

R89-1TBC	Polished Chrome	3	$192
R89-1TBK	Brushed Nickel	3	$260
R89-1TBD	Polished Nickel	3	$260
R89-1TBY	Tuscan Bronze	3	$315
R89-1TBBG	Brushed Gold	3	$355

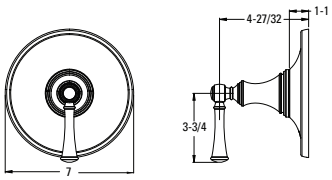

Features:
- Metal Lever Handle
- Hot/Cold Indicator
- Optional Cross Handle HHL-Ø89TB*
- Both Finished Matched Metal and Ceramic Caps Included

Must Order Pressure Balance Rough in Valve Separately. See Valve Section.

CEC Compliant | Cal Green Compliant | Meets EPA WaterSense℠ Standards | NSF Lead-Free Certified | ADA Compliant | UltraSeal™ | SecurePfit™

	Model	Finish	Case Qty	List Price
Pressure Balance Optional Cross Handle - Tub & Shower	HHL-Ø89TBC	Polished Chrome	3	$25
	HHL-Ø89TBK	Brushed Nickel	3	$38
	HHL-Ø89TBD	Polished Nickel	3	$38
	HHL-Ø89TBY	Tuscan Bronze	3	$44
	HHL-Ø89TBBG	Brushed Gold	3	$50

Technical Info

Features:
- Optional Cross Handle
- Easy Install on Tub & Shower Trim, LG89-8TB*, LG89-7TB8, and R89-1TB*

How to Order a Cross Handle Shower Trim

Cross Handle
HHL-Ø89TB*
or
HHL-Ø892TB*

+

Valve Trim
LG89-8TB*
LG89-7TB*
R89-1TB*

=

Complete Pressure Balance Shower Trim

Diverter Trim Only	Ø16-TB1C	Polished Chrome	3	$131
	Ø16-TB1K	Brushed Nickel	3	$179
	Ø16-TB1D	Polished Nickel	3	$179
	Ø16-TB1Y	Tuscan Bronze	3	$230
	Ø16-TB1BG	Brushed Gold	3	$258

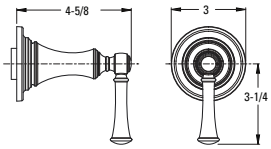

Features:
- SecurePfit™
- Metal Lever Handle and Matching Flange
- Can be Used with Ø15-2WDX for Cal Green Compliant Applications
- Optional Cross Handle HHL-Ø16TB*
- Both Finished Matched Metal and Ceramic Caps Included

Must Order Ø15-4WDX or Ø15-2WDX Rough In Valve Separately. See Valve Section.

Optional Cross Handle - Diverter Trim	HHL-Ø16TBC	Polished Chrome	3	$27
	HHL-Ø16TBK	Brushed Nickel	3	$38
	HHL-Ø16TBD	Polished Nickel	3	$38
	HHL-Ø16TBY	Tuscan Bronze	3	$44
	HHL-Ø16TBBG	Brushed Gold	3	$50

Features:
- Optional Cross Handle
- Easy Install on Diverter Handle, Ø16-TB1*

How to Order a Cross Handle Diverter Trim

Cross Handle
HHL-Ø16TB*

+

Diverter Trim
Ø16-TB1*

=

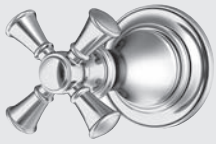

Complete Diverter Trim

CEC Compliant | Cal Green Compliant | Meets EPA WaterSense℠ Standards | NSF Lead-Free Certified | ADA Compliant | UltraSeal™ | SecurePfit™

Tisbury™ - Tub & Shower

Slide Bar/Hand Shower Kit

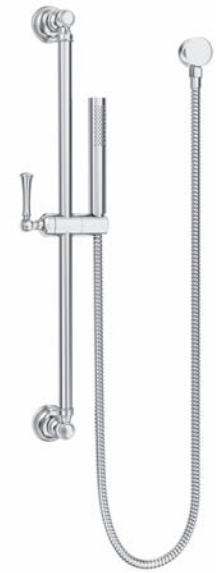

Model	Finish	Case Qty	List Price
LG16-3TBC	Polished Chrome	3	$358
LG16-3TBK	Brushed Nickel	3	$505
LG16-3TBD	Polished Nickel	3	$505
LG16-3TBY	Tuscan Bronze	3	$592
LG16-3TBBG	Brushed Gold	3	$682

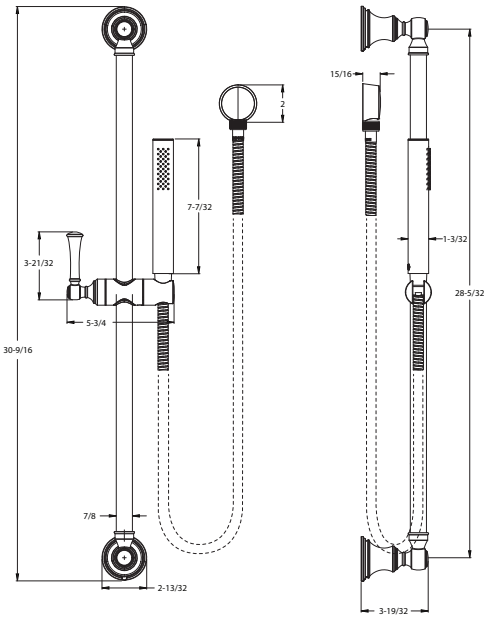

Technical Info

Features:
- Complete Slide Bar Package with Handheld Shower, Hose, Drop Elbow, Slide Bar, and Wall Mount Bracket
- All Metal Slide Bar
- Optional Cross Handle HHL-G16TB*
- Easy To Clean Spray Nozzles
- 60" Metal Hose with Matching Finish
- Back Flow Prevention
- Works with Tisbury Diverter Trim and Valve
- Both Finished Matched Metal and White Ceramic Inserts Included
- Not to Be Used as a Grab Bar
- Hand Shower 1.8 gpm @ 80 psi

Slide Bar Kit Cross Handles

HHL-G16TBC	Polished Chrome	3	$24
HHL-G16TBK	Brushed Nickel	3	$37
HHL-G16TBD	Polished Nickel	3	$37
HHL-G16TBY	Tuscan Bronze	3	$43
HHL-G16TBBG	Brushed Gold	3	$50

Features:
- Optional Cross Handle for Tisbury Slide Bar Kit, LG16-3TB*
- Easy Install On Slide Bar Kit

How to Order a Cross Handle Slide Bar Kit

Cross Handle
HHL-G16TB*

+

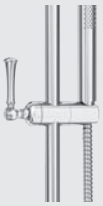

Slide Bar Kit
LG16-3TB*

=

Complete Slide Bar Kit

CEC Compliant | Cal Green Compliant | Meets EPA WaterSense℠ Standards | NSF Lead-Free Certified | ADA Compliant | UltraSeal™ | SecurePfit™

Raincan Showerhead

Model	Finish	Case Qty	List Price
LG15-TBØC	Polished Chrome	3	$102
LG15-TBØK	Brushed Nickel	3	$126
LG15-TBØD	Polished Nickel	3	$126
LG15-TBØY	Tuscan Bronze	3	$139
LG15-TBØBG	Brushed Gold	3	$158

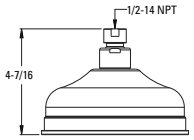

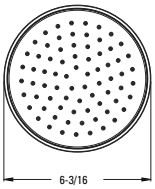

Technical Info

Features:
- All Brass Showerhead
- Easy To Clean Nozzles
- Shower Arm and Flange Sold Separately
- Showerhead 1.8 gpm @ 80 psi

Tub Spout

92Ø-194A	Polished Chrome	1	$79
92Ø-194J	Brushed Nickel	1	$88
92Ø-194D	Polished Nickel	1	$88
92Ø-194Y	Tuscan Bronze	1	$93
92Ø-194BG	Brushed Gold	1	$133

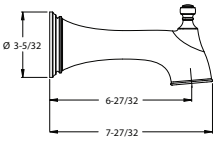

Features:
- All Metal
- IP & Quick Connect Diverted Spout

Hand Shower

LG16-TBØC	Polished Chrome	1	$65
LG16-TBØK	Brushed Nickel	1	$80
LG16-TBØD	Polished Nickel	1	$80
LG16-TBØY	Tuscan Bronze	1	$87
LG16-TBØBG	Brushed Gold	1	$99

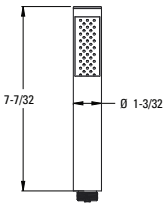

Features:
- Single-Function, Self Cleaning Hand Shower
- Matching Finish
- Easy To Clean Nozzles
- Hand Shower 1.8 gpm @ 80 psi

CEC Compliant | Cal Green Compliant | Meets EPA WaterSense℠ Standards | NSF Lead-Free Certified | ADA Compliant | UltraSeal™ | SecurePfit™

Tisbury™ - Accessories

24" Towel Rack

Model	Finish	Case Qty	List Price
BTR-TB2C	Polished Chrome	3	$387
BTR-TB2K	Brushed Nickel	3	$446
BTR-TB2D	Polished Nickel	3	$446
BTR-TB2Y	Tuscan Bronze	3	$468
BTR-TB2BG	Brushed Gold	3	$527

Technical Info

Holes: · 4-Hole Installation

Features:
- Premium Metal Construction
- Superior Mounting Posts
- Concealed Screw Installation
- Mounting Hardware Included
- 2 Hanging Hooks Included
- 75lb. Max. Load

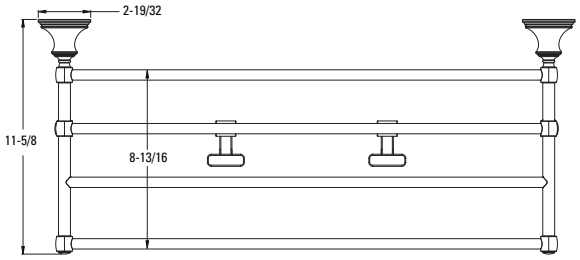

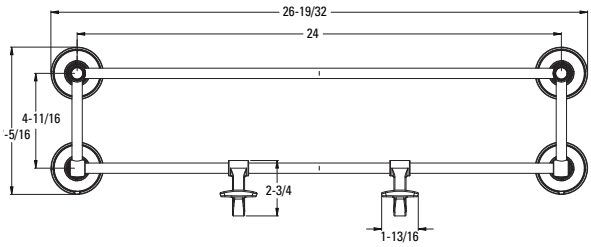

18" Towel Bar

BTB-TB1C	Polished Chrome	3	$117
BTB-TB1K	Brushed Nickel	3	$129
BTB-TB1D	Polished Nickel	3	$129
BTB-TB1Y	Tuscan Bronze	3	$134
BTB-TB1BG	Brushed Gold	3	$143

Holes: · 2-Hole Installation

Features:
- Premium Metal Construction
- Superior Mounting Posts
- Concealed Screw Installation
- Mounting Hardware Included

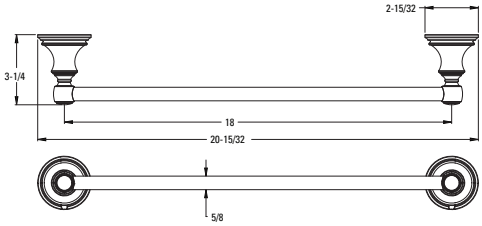

24" Double Towel Bar

BTB-TB2C	Polished Chrome	3	$133
BTB-TB2K	Brushed Nickel	3	$149
BTB-TB2D	Polished Nickel	3	$149
BTB-TB2Y	Tuscan Bronze	3	$169
BTB-TB2BG	Brushed Gold	3	$192

Holes: · 2-Hole Installation

Features:
- Premium Metal Construction
- Superior Mounting Posts
- Concealed Screw Installation
- Mounting Hardware Included

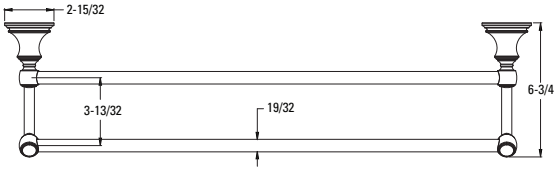

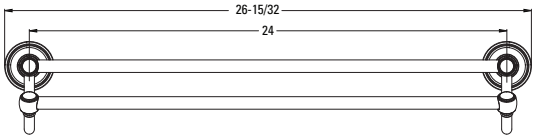

Towel Ring

Model	Finish	Case Qty	List Price
BRB-TBØC	Polished Chrome	3	$89
BRB-TBØK	Brushed Nickel	3	$101
BRB-TBØD	Polished Nickel	3	$101
BRB-TBØY	Tuscan Bronze	3	$122
BRB-TBØBG	Brushed Gold	3	$138

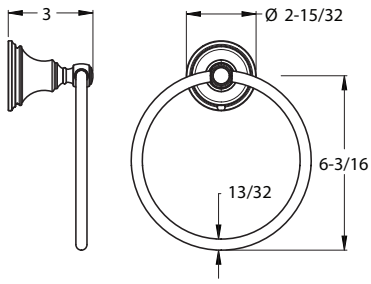

Technical Info

Holes: · 1-Hole Installation

Features:
· Premium Metal Construction
· Superior Mounting Posts
· Concealed Screw Installation
· Mounting Hardware Included

Paper Holder

Model	Finish	Case Qty	List Price
BPH-TBØC	Polished Chrome	3	$89
BPH-TBØK	Brushed Nickel	3	$122
BPH-TBØD	Polished Nickel	3	$122
BPH-TBØY	Tuscan Bronze	3	$133
BPH-TBØBG	Brushed Gold	3	$150

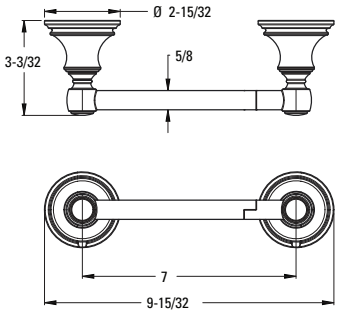

Holes: · 2-Hole Installation

Features:
· Premium Metal Construction
· Pivot Swing Paper Mount
· Concealed Screw Installation
· Mounting Hardware Included

Robe Hook

Model	Finish	Case Qty	List Price
BRH-TBØC	Polished Chrome	3	$61
BRH-TBØK	Brushed Nickel	3	$72
BRH-TBØD	Polished Nickel	3	$72
BRH-TBØY	Tuscan Bronze	3	$80
BRH-TBØBG	Brushed Gold	3	$89

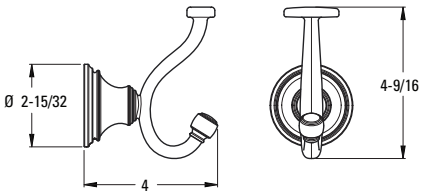

Holes: · 1-Hole Installation

Features:
· Premium Metal Construction
· Superior Mounting Posts
· Concealed Screw Installation
· Mounting Hardware Included

Kelen

The Kelen Collection balances minimalistic lines with more streamlined elements, making this collection extremely versatile for a variety of modern and contemporary bathroom designs. Available in both trough and non-trough design options.

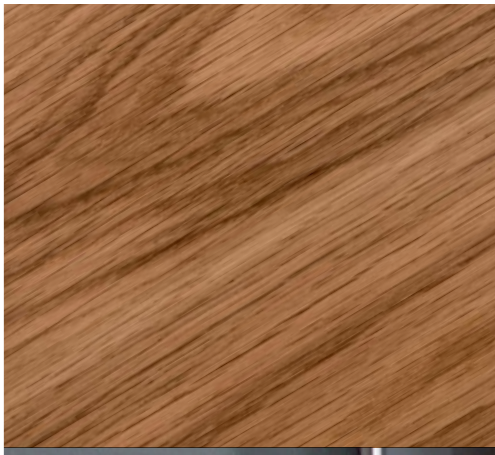

Single Control Lavatory
LG42-MFØC

Single Control Vessel Lavatory
LG4Ø-MFØC

8" Widespread Lavatory
LG49-MFØC

Single Control Lavatory Trough
LG42-MF1C

Single Control Vessel Lavatory Trough
LG4Ø-MF1C

8" Widespread Lavatory Trough
LG49-MF1C

3-Hole Roman Tub
RT6-5MFC

4-Hole Roman Tub
LG6-4MFC

Tub & Shower
LG89-8MFC

Shower Only
LG89-7MFC

Valve Only
R89-1MFC

Diverter Trim
Ø16-MF1C

Slide Bar/
Hand
Shower Kit
LG16-3MFC

Accessories

18" & 24" Towel Bar
BTB-MF1C & BTB-MF2C

Towel Ring
BRB-MFØC

Paper Holder
BPH-MFØC

Robe Hook
BRH-MFØC

Kelen™ - Lavatory Faucets

Single Control Vessel Lavatory

Model	Finish	Case Qty	List Price
LG4Ø-MFØC	Polished Chrome	3	$394
LG4Ø-MFØK	Brushed Nickel	3	$519

Technical Info

Holes: · 1-Hole Installation

Features:
- Ceramic Disc Valve
- Metal Lever Handle
- Single Post Mounting Ring
- Grid Strainer Sold Separately
- 1.2 gpm @ 60 psi

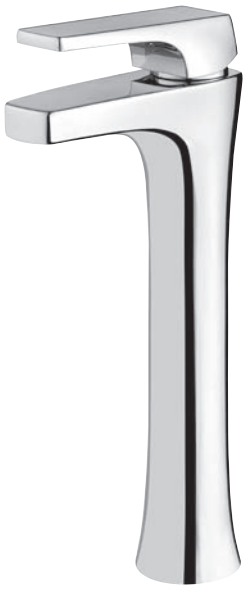

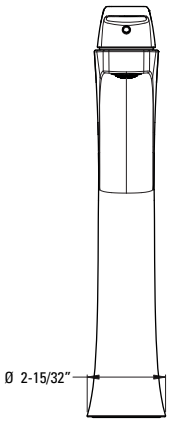

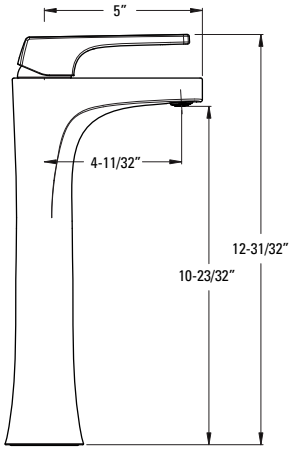

Single Control Vessel Lavatory Trough

LG4Ø-MF1C	Polished Chrome	3	$431
LG4Ø-MF1K	Brushed Nickel	3	$542

Holes: · 1-Hole Installation

Features:
- Ceramic Disc Valve
- Metal Lever Handle
- Single Post Mounting Ring
- Grid Strainer Sold Separately
- 1.2 gpm @ 60 psi

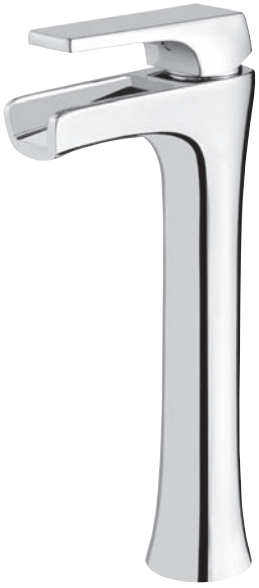

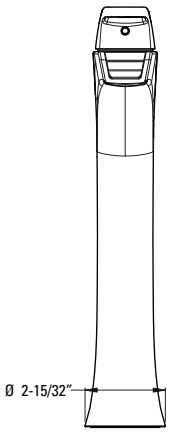

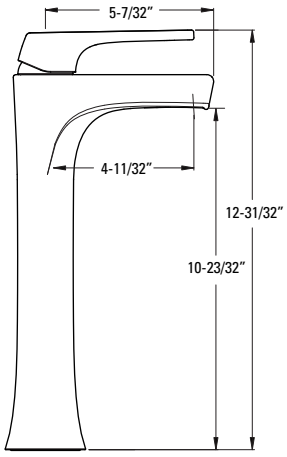

CEC Compliant · Cal Green Compliant · Meets EPA WaterSense℠ Standards · NSF Lead-Free Certified · ADA Compliant · UltraSeal™ · SecurePfit™

Single Control Lavatory

Model	Finish	Case Qty	List Price
LG42-MFØC	Polished Chrome	3	$312
LG42-MFØK	Brushed Nickel	3	$423

Technical Info

Holes: · 1 or 3-Hole 4" Installation

Features:
- Ceramic Disc Valve
- Metal Lever Handle
- Single Post Mounting Ring
- 3-Hole Deckplate Sold Separately 961-146*
- All Metal Pop-Up
- 1.2 gpm @ 60 psi

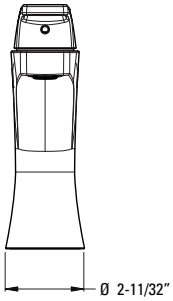

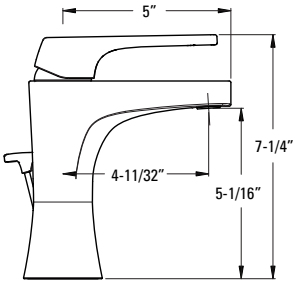

Single Control Lavatory Trough

LG42-MF1C	Polished Chrome	3	$374
LG42-MF1K	Brushed Nickel	3	$456

Holes: · 1 or 3-Hole 4" Installation

Features:
- Ceramic Disc Valve
- Metal Lever Handle
- Single Post Mounting Ring
- 3-Hole Deckplate Sold Separately 961-146*
- All Metal Pop-Up
- 1.2 gpm @ 60 psi

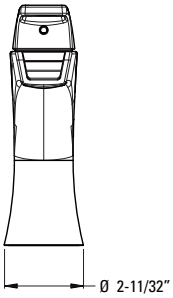

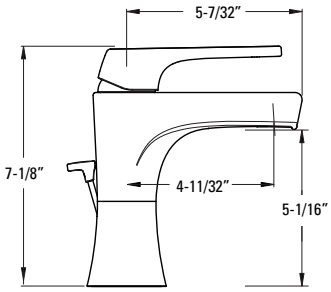

CEC Compliant · Cal Green Compliant · Meets EPA WaterSense℠ Standards · NSF Lead-Free Certified · ADA Compliant · UltraSeal™ · SecurePfit™

Kelen™ - Lavatory Faucets

8" Widespread Lavatory

Model	Finish	Case Qty	List Price
LG49-MFØC	Polished Chrome	3	$413
LG49-MFØK	Brushed Nickel	3	$519

Technical Info

Holes: · 3-Hole 8-15" Installation

Features:
- Ceramic Disc Valves
- Metal Lever Handles
- All Metal Pop-Up
- Quick Connect Hose Assembly
- Order 971-Ø86Ø to Increase Max. Install Depth to 3"
- 1.2 gpm @ 60 psi

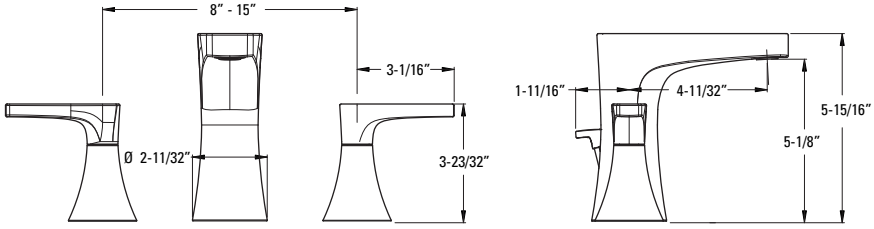

8" Widespread Lavatory Trough

LG49-MF1C	Polished Chrome	3	$456
LG49-MF1K	Brushed Nickel	3	$561

Holes: · 3-Hole 8-15" Installation

Features:
- Ceramic Disc Valves
- Metal Lever Handles
- All Metal Pop-Up
- Quick Connect Hose Assembly
- Order 971-Ø86Ø to Increase Max. Install Depth to 3"
- 1.2 gpm @ 60 psi

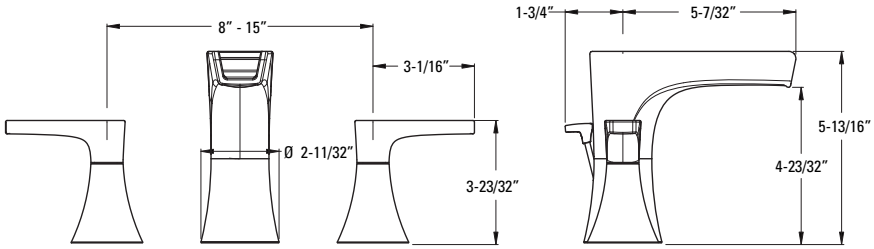

CEC Compliant · Cal Green Compliant · Meets EPA WaterSense℠ Standards · NSF Lead-Free Certified · ADA Compliant · UltraSeal™ · SecurePfit™

	Model	Finish	Case Qty	List Price
Universal Grid Strainer	972-1Ø4A	Polished Chrome	6	$51
	972-1Ø4J	Brushed Nickel	6	$59

Technical Info

Features:
- All Metal Grid Strainer
- With Overflow
- 1-1/4" Tailpiece

Universal Grid Strainer	972-1Ø3A	Polished Chrome	6	$51
	972-1Ø3J	Brushed Nickel	6	$59

Features:
- All Metal Grid Strainer
- No Overflow
- 1-1/4" Tailpiece

Kelen™ - Tub Fillers

	Model	Finish	Case Qty	List Price
Roman Tub Trim	RT6-5MFC	Polished Chrome	3	$487
	RT6-5MFK	Brushed Nickel	3	$588

Technical Info

Holes: · 3-Hole Installation

Features:
· Ceramic Disc Valves
· Metal Lever Handles
· Fixed Spout

Must Order ØX6-Ø5ØR or ØX6-15ØR Rough In Valve Separately. See Valve Section.

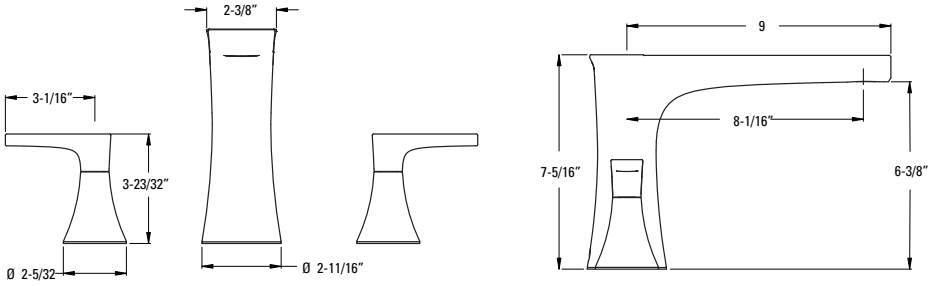

CEC Compliant · Cal Green Compliant · Meets EPA WaterSense℠ Standards · NSF Lead-Free Certified · ADA Compliant · UltraSeal™ · SecurePfit™

Pressure Balance Tub & Shower Trim

Model	Finish	Case Qty	List Price
LG89-8MFC	Polished Chrome	3	$414
LG89-8MFK	Brushed Nickel	3	$290

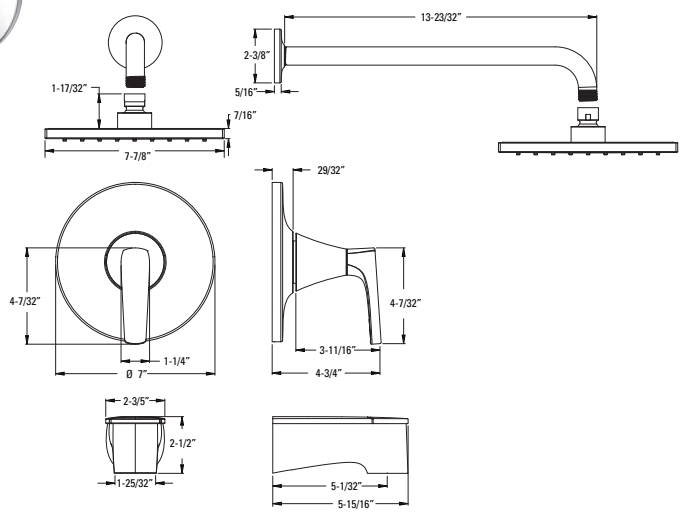

Technical Info

Features:
- SecurePfit™
- Metal Lever Handle
- Hot/Cold Indicator
- Decorative 8" Raincan Showerhead
- Easy To Clean Spray Nozzles
- IP & Quick Connect Metal Diverted Tub Spout
- Order 941-Ø55Ø for 1.5 gpm Showerhead Insert
- Showerhead 1.8 gpm @ 80 psi

Must Order Pressure Balance Rough in Valve Separately. See Valve Section.

Pressure Balance Shower Trim

LG89-7MFC	Polished Chrome	3	$331
LG89-7MFK	Brushed Nickel	3	$394

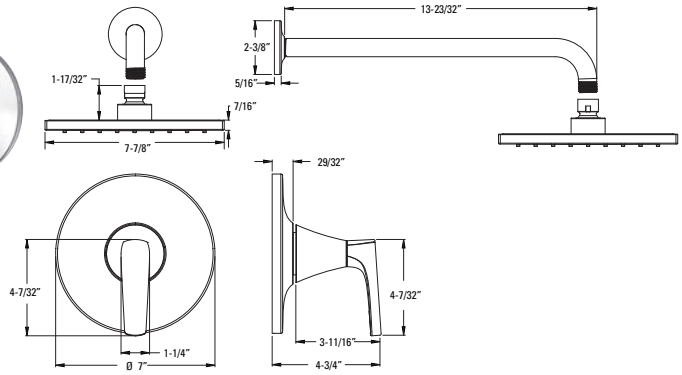

Features:
- SecurePfit™
- Metal Lever Handle
- Hot/Cold Indicator
- Decorative 8" Raincan Showerhead
- Easy To Clean Spray Nozzles
- Order 941-Ø55Ø for 1.5 gpm Showerhead Insert
- Showerhead 1.8 gpm @ 80 psi

Must Order Pressure Balance Rough in Valve Separately. See Valve Section.

CEC Compliant | Cal Green Compliant | Meets EPA WaterSense℠ Standards | NSF Lead-Free Certified | ADA Compliant | UltraSeal™ | SecurePfit™

Kelen™ - Tub & Shower

Pressure Balance Valve Only Trim

Model	Finish	Case Qty	List Price
R89-1MFC	Polished Chrome	3	$183
R89-1MFK	Brushed Nickel	3	$231

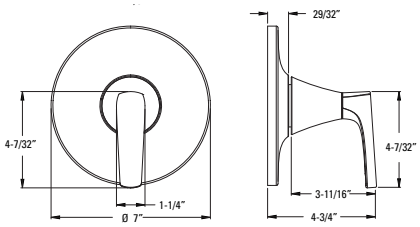

Technical Info

Features:
- SecurePfit™
- Metal Lever Handle
- Hot/Cold Indicator
- Quick Trim™ Wall Flange

Must Order Pressure Balance Rough in Valve Separately. See Valve Section.

Diverter Trim Only

Ø16-MF1C	Polished Chrome	3	$131
Ø16-MF1K	Brushed Nickel	3	$150

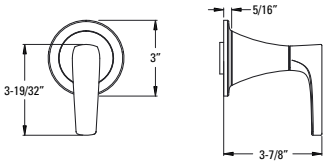

Features:
- Metal Lever Handle and Matching Flange
- Can Be Used with Ø15-2WDX for Cal Green Compliant Applications

Must Order Ø15-4WDX or Ø15-2WDX Rough In Valve Separately. See Valve Section.

Slide Bar/Hand Shower Kit

LG16-3MFC	Polished Chrome	3	$387
LG16-3MFK	Brushed Nickel	3	$519

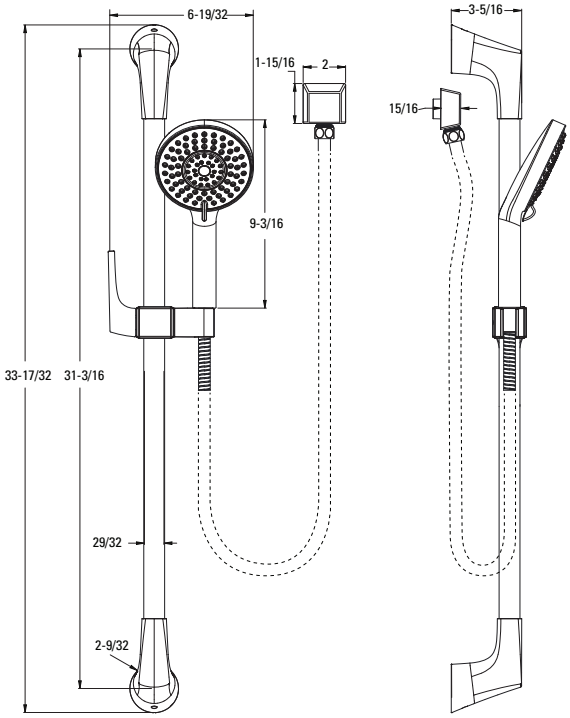

Features:
- Complete Slide Bar Package with Handheld Shower, Hose, Drop Elbow, and Slide Bar, and Wall Mount Bracket
- All Metal Slide Bar
- 3-Function Hand Shower
- Easy To Clean Spray Nozzles
- 60" Metal Hose with Matching Finish
- Back Flow Prevention
- Works with Kelen Diverter Trim and Valve
- Not to Be Used as a Grab Bar
- Hand Shower 1.8 gpm @ 80 psi

CEC Compliant | Cal Green Compliant | Meets EPA WaterSense℠ Standards | NSF Lead-Free Certified | ADA Compliant | UltraSeal™ | SecurePfit™

Raincan Showerhead

Model	Finish	Case Qty	List Price
LG15-MFØC	Polished Chrome	3	$95
LG15-MFØK	Brushed Nickel	3	$121

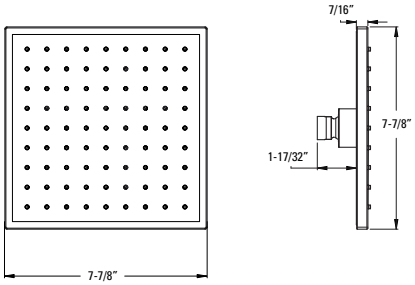

Technical Info

Features:
- Raincan Showerhead
- Easy To Clean Spray Nozzles
- Shower Arm and Flange Sold Separately
- Order 941-Ø55Ø for 1.5 gpm Showerhead Insert
- Showerhead 1.8 gpm @ 80 psi

Shower Flange

96Ø-293A	Polished Chrome	1	$10
96Ø-293J	Brushed Nickel	1	$14

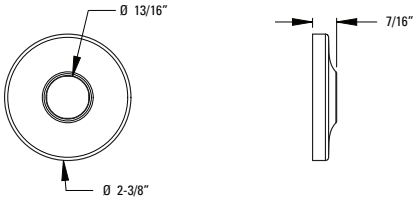

Features:
- All Metal
- Matches Finish and Style

CEC Compliant | Cal Green Compliant | Meets EPA WaterSense℠ Standards | NSF Lead-Free Certified | ADA Compliant | UltraSeal™ | SecurePfit™

Kelen™ - Tub & Shower

Straight Shower Arm

Model	Finish	Case Qty	List Price
973-1Ø3A	Polished Chrome	1	$77
973-1Ø3J	Brushed Nickel	1	$93

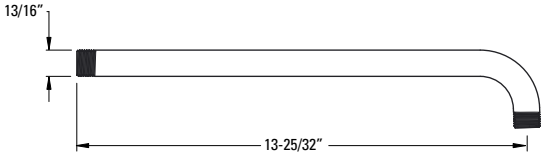

Technical Info

Features:
- 14" Shower Arm
- Brass Shower Arm
- 1/2" NPT Male Connections

Tub Spout

92Ø-16ØA	Polished Chrome	1	$97
92Ø-16ØJ	Brushed Nickel	1	$110

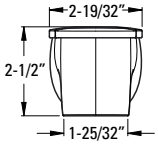

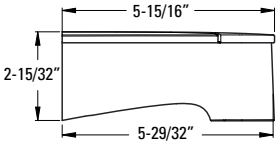

Features:
- All Metal
- IP & Quick Connect Diverted Spout
- Integrated Diverter

60" Hose

951-335A	Polished Chrome	6	$47
951-335J	Brushed Nickel	6	$110

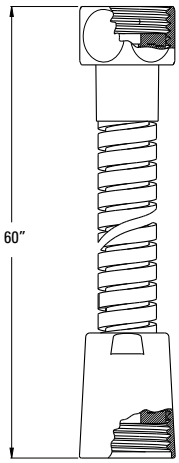

Features:
- 60" Anti-Twist Hose
- Matching Finish Metal Hose

Square Drop Elbow

Model	Finish	Case Qty	List Price
973-279A	Polished Chrome	8	$40
973-279J	Brushed Nickel	8	$61

Technical Info

Features:
- 1/2" IP Connection
- Matching Finish

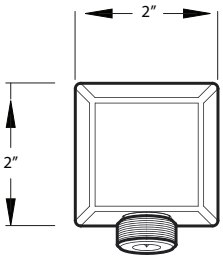

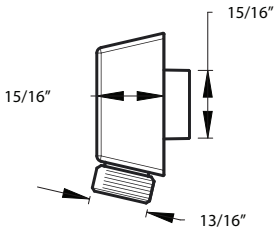

Hand Shower

LG16-MFØC	Polished Chrome	12	$76
LG16-MFØK	Brushed Nickel	12	$88

Features:
- 3-Function Hand Shower
- Easy To Clean Spray Nozzles
- Matching Finish
- Hand Shower 1.8 gpm @ 80 psi

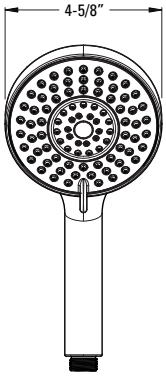

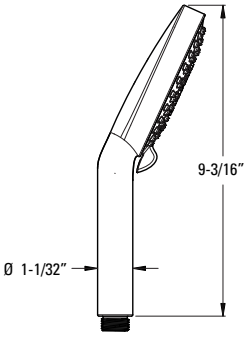

Kelen™ - Accessories

18" Towel Bar

Model	Finish	Case Qty	List Price
BTB-MF1C	Polished Chrome	3	$107
BTB-MF1K	Brushed Nickel	3	$121

Technical Info

Holes: · 2-Hole Installation

Features:
· Premium Metal Construction
· Superior Mounting Posts
· Concealed Screw Installation
· Mounting Hardware Included

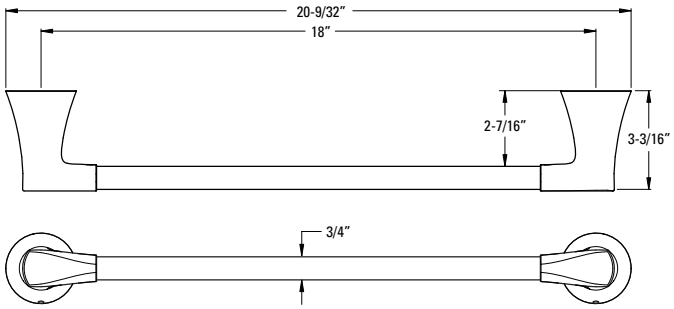

24" Towel Bar

BTB-MF2C	Polished Chrome	3	$126
BTB-MF2K	Brushed Nickel	3	$138

Holes: · 2-Hole Installation

Features:
· Premium Metal Construction
· Superior Mounting Posts
· Concealed Screw Installation
· Mounting Hardware Included

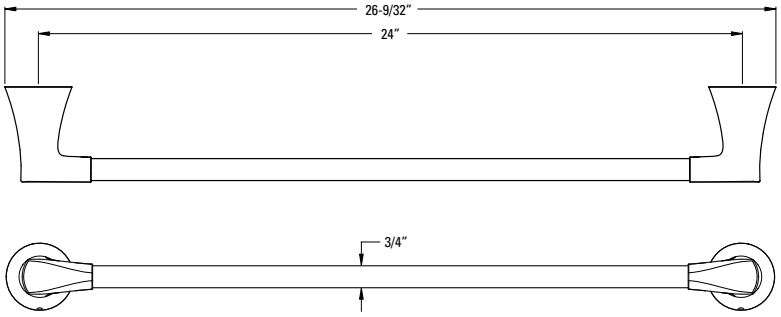

Towel Ring

BRB-MFØC	Polished Chrome	3	$83
BRB-MFØK	Brushed Nickel	3	$95

Holes: · 1-Hole

Features:
· Premium Metal Construction
· Superior Mounting Posts
· Concealed Screw Installation
· Mounting Hardware Included

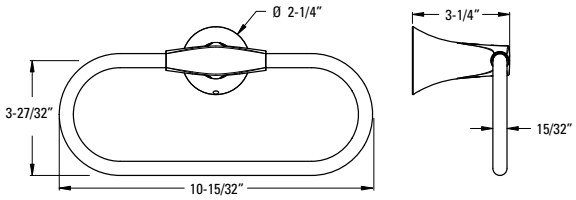

Paper Holder

Model	Finish	Case Qty	List Price
BPH-MFØC	Polished Chrome	3	$100
BPH-MFØK	Brushed Nickel	3	$112

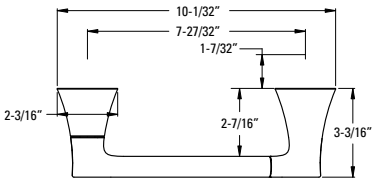

Technical Info

Holes: · 2-Hole Installation

Features:
- Premium Metal Construction
- Superior Mounting Posts
- Concealed Screw Installation
- Mounting Hardware Included
- All Metal Swivel Mount Paper Holder

Robe Hook

BRH-MFØC	Polished Chrome	3	$46
BRH-MFØK	Brushed Nickel	3	$54

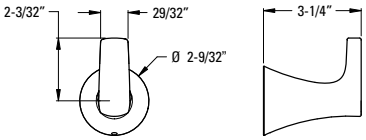

Holes: · 1-Hole Installation

Features:
- Premium Metal Construction
- Superior Mounting Posts
- Concealed Screw Installation
- Mounting Hardware Included

Park Avenue

The Park Avenue Collection evokes the drama of New York and the high end modernity of the Art Deco Style. Like its namesake, Park Avenue's lines reflect a modern grace that blends into many bathroom styles.

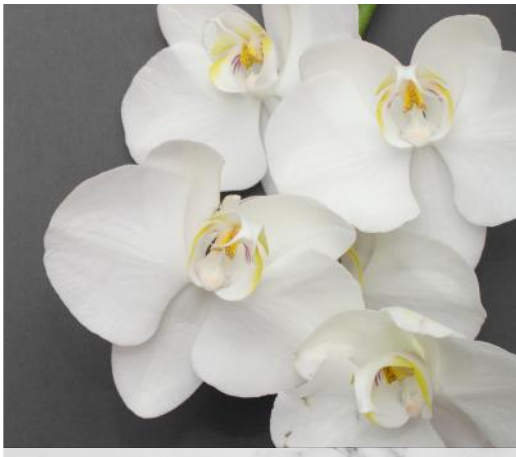

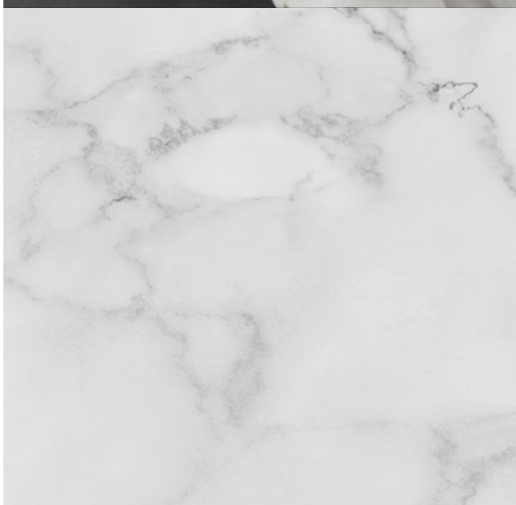

Single Control Vessel Lavatory
LG4Ø-FEØC

Single Control Lavatory
LG42-FEØC

8" Widespread Lavatory
LG49-FEØC

Slide Bar/
Hand Shower Kit
LG16-3FWC

3-Hole Roman Tub
RT6-5FEC

Tub & Shower
LG89-8FEC

Shower Only
LG89-7FEC

Diverter Trim
Ø16-FE1C

Valve Only
R89-1FEC

4-Hole Roman Tub
LG6-4FEC

Accessories

18" & 24" Towel Bar
BTB-FE1C & BTB-FE2C

Towel Ring
BRB-FE1C

Paper Holder
BPH-FE1C

Robe Hook
BRH-FE1C

Park Avenue™ - Lavatory Faucets

Single Control Vessel Lavatory

Model	Finish	Case Qty	List Price
LG4Ø-FEØC	Polished Chrome	3	$361
LG4Ø-FEØK	Brushed Nickel	3	$501
LG4Ø-FEØD	Polished Nickel	3	$501
LG4Ø-FEØY	Tuscan Bronze	3	$533
LG4Ø-FEØBG	Brushed Gold	3	$658

Technical Info

Holes: · 1-Hole 4" Installation

Features:
- Ceramic Disc Valve
- Metal Lever Handle
- Single Post Mounting Ring
- Grid Strainer Sold Separately
- 1.2 gpm @ 60 psi

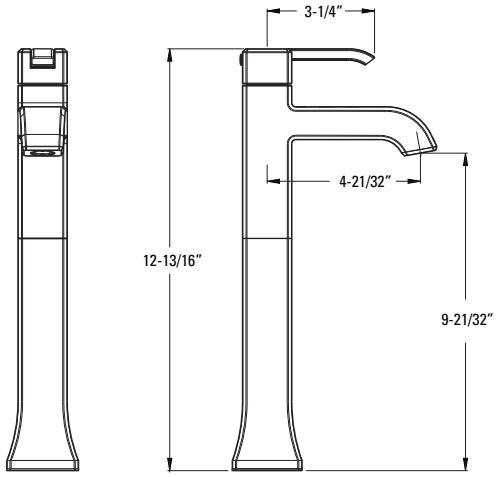

Single Control Lavatory

LG42-FEØC	Polished Chrome	3	$300
LG42-FEØK	Brushed Nickel	3	$404
LG42-FEØD	Polished Nickel	3	$404
LG42-FEØY	Tuscan Bronze	3	$435
LG42-FEØBG	Brushed Gold	3	$545

Holes: · 1 or 3-Hole 4" Installation

Features:
- Ceramic Disc Valve
- Metal Lever Handle
- Single Post Mounting Ring
- 3-Hole Deckplate Sold Separately 96Ø-2Ø4*
- All Metal Pop-Up
- 1.2 gpm @ 60 psi

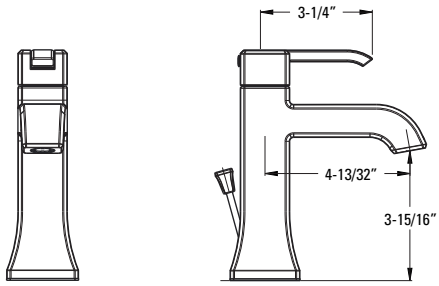

CEC Compliant · Cal Green Compliant · Meets EPA WaterSense℠ Standards · NSF Lead-Free Certified · ADA Compliant · UltraSeal™ · SecurePfit™

8" Widespread Lavatory

Model	Finish	Case Qty	List Price
LG49-FEØC	Polished Chrome	3	$412
LG49-FEØK	Brushed Nickel	3	$590
LG49-FEØD	Polished Nickel	3	$590
LG49-FEØY	Tuscan Bronze	3	$618
LG49-FEØBG	Brushed Gold	3	$745

Technical Info

Holes: · 3-Hole 8-15" Installation

Features:
- Ceramic Disc Valves
- Metal Lever Handles
- All Metal Pop-Up
- Quick Connect Hose Assembly
- Order 971-Ø86Ø to Increase Max. Install Depth to 3"
- 1.2 gpm @ 60 psi

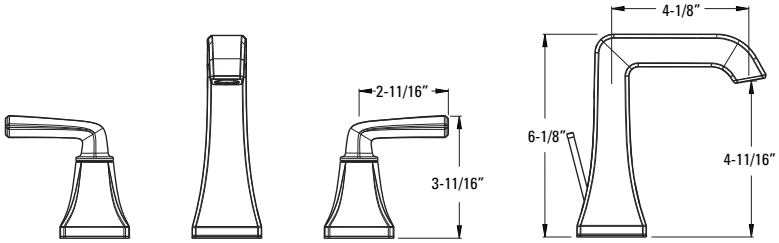

Universal Grid Strainer

972-1Ø4A	Polished Chrome	6	$51
972-1Ø4J	Brushed Nickel	6	$59
972-1Ø4D	Polished Nickel	6	$59
972-1Ø4Y	Tuscan Bronze	6	$65
972-1Ø4BG	Brushed Gold	6	$88

Features:
- All Metal Grid Strainer
- With Overflow
- 1 1/4" Tailpiece

Universal Grid Strainer

972-1Ø3A	Polished Chrome	6	$51
972-1Ø3J	Brushed Nickel	6	$59
972-1Ø3D	Polished Nickel	6	$59
972-1Ø3Y	Tuscan Bronze	6	$65
972-1Ø3BG	Brushed Gold	6	$88

Features:
- All Metal Grid Strainer
- No Overflow
- 1 1/4" Tailpiece

CEC Compliant · Cal Green Compliant · Meets EPA WaterSense℠ Standards · NSF Lead-Free Certified · ADA Compliant · UltraSeal™ · SecurePfit™

SHOWROOM PREFERRED

Park Avenue™ - Tub Fillers

Roman Tub Trim

Model	Finish	Case Qty	List Price
RT6-5FEC	Polished Chrome	3	$476
RT6-5FEK	Brushed Nickel	3	$610
RT6-5FED	Polished Nickel	3	$610
RT6-5FEY	Tuscan Bronze	3	$665
RT6-5FEBG	Brushed Gold	3	$863

Technical Info

Holes: · 3-Hole

Features:
· Ceramic Disc Valves
· Metal Lever Handles
· Fixed Spout

Must Order ØX6-Ø5ØR or ØX6-15ØR Rough In Valve Separately. See Valve Section.

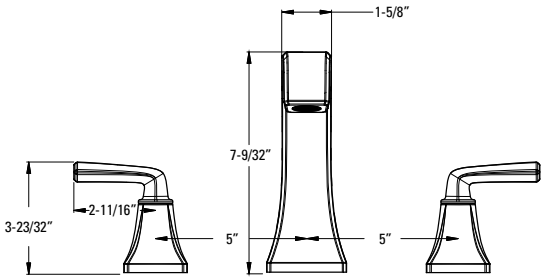

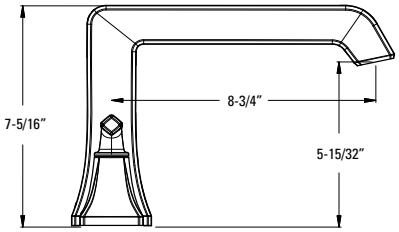

Roman Tub Trim with Hand Shower

LG6-4FEC	Polished Chrome	3	$598
LG6-4FEK	Brushed Nickel	3	$811
LG6-4FED	Polished Nickel	3	$811
LG6-4FEY	Tuscan Bronze	3	$852
LG6-4FEBG	Brushed Gold	3	$1,086

Holes: · 4-Hole

Features:
· Ceramic Disc Valves
· Metal Lever Handles
· Fixed Spout
· Hand Held Shower
· Easy To Clean Spray Nozzles
· Hand Shower 1.8 gpm @ 80 psi

Must Order ØX6-44ØR Rough In Valve Separately. See Valve Section.

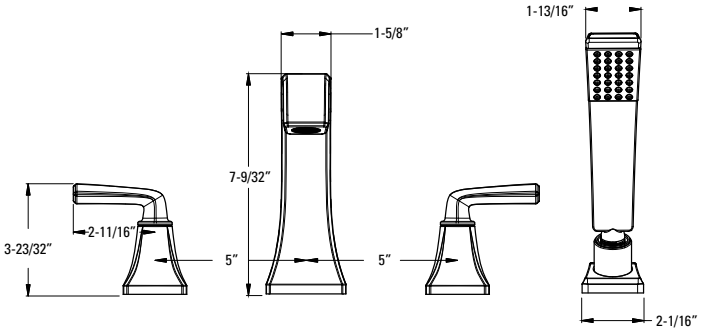

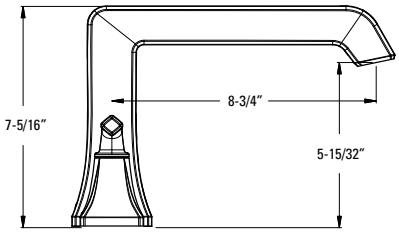

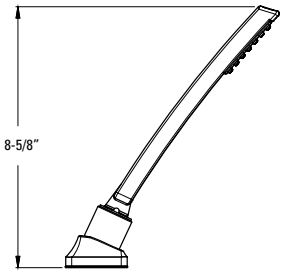

CEC Compliant · Cal Green Compliant · Meets EPA WaterSense℠ Standards · NSF Lead-Free Certified · ADA Compliant · UltraSeal™ · SecurePfit™

Pressure Balance Tub & Shower Trim

Model	Finish	Case Qty	List Price
LG89-8FEC	Polished Chrome	3	$372
LG89-8FEK	Brushed Nickel	3	$483
LG89-8FED	Polished Nickel	3	$483
LG89-8FEY	Tuscan Bronze	3	$551
LG89-8FEBG	Brushed Gold	3	$673

Technical Info

Features:
- SecurePfit™
- Metal Lever Handle
- Hot/Cold Indicator
- Decorative Raincan Showerhead
- Easy To Clean Spray Nozzles
- Quick Connect Metal Diverted Tub Spout
- Order 941-Ø55Ø for 1.5 gpm Showerhead Insert
- Showerhead 1.8 gpm @ 80 psi

Must Order Pressure Balance Rough in Valve Separately. See Valve Section.

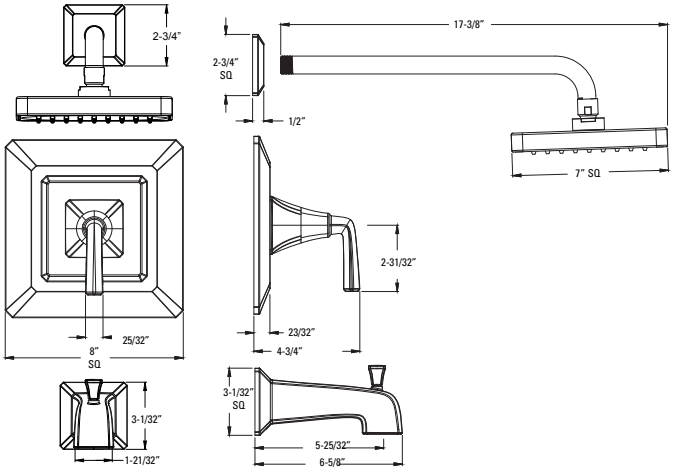

Pressure Balance Shower Trim

Model	Finish	Case Qty	List Price
LG89-7FEC	Polished Chrome	3	$337
LG89-7FEK	Brushed Nickel	3	$419
LG89-7FED	Polished Nickel	3	$419
LG89-7FEY	Tuscan Bronze	3	$495
LG89-7FEBG	Brushed Gold	3	$612

Features:
- SecurePfit™
- Metal Lever Handle
- Hot/Cold Indicator
- Decorative Raincan Showerhead
- Easy To Clean Spray Nozzles
- Order 941-Ø55Ø for 1.5 gpm Showerhead Insert
- Showerhead 1.8 gpm @ 80 psi

Must Order Pressure Balance Rough in Valve Separately. See Valve Section.

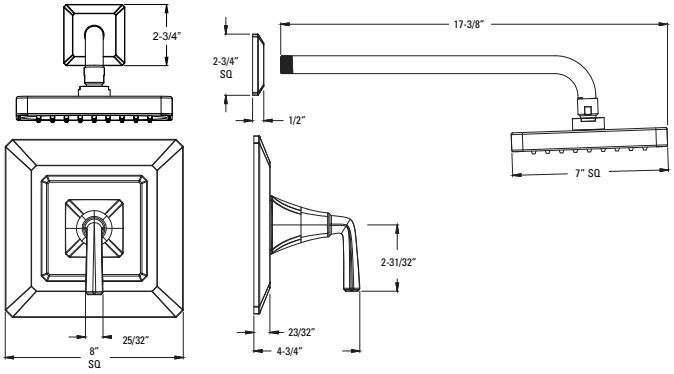

CEC Compliant | Cal Green Compliant | Meets EPA WaterSense℠ Standards | NSF Lead-Free Certified | ADA Compliant | UltraSeal™ | SecurePfit™

Park Avenue™ - Tub & Shower

Pressure Balance Valve Only Trim

Model	Finish	Case Qty	List Price
R89-1FEC	Polished Chrome	3	$189
R89-1FEK	Brushed Nickel	3	$232
R89-1FED	Polished Nickel	3	$232
R89-1FEY	Tuscan Bronze	3	$281
R89-1FEBG	Brushed Gold	3	$339

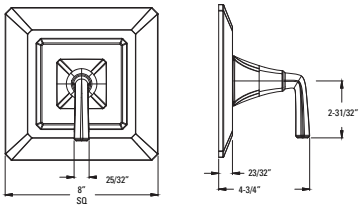

Technical Info

Features:
- SecurePfit™
- Metal Lever Handle
- Hot/Cold Indicator

Must Order Pressure Balance Rough in Valve Separately. See Valve Section.

Diverter Trim Only

Ø16-FEØC	Polished Chrome	3	$119
Ø16-FEØK	Brushed Nickel	3	$160
Ø16-FEØD	Polished Nickel	3	$160
Ø16-FEØY	Tuscan Bronze	3	$206
Ø16-FEØBG	Brushed Gold	3	$211

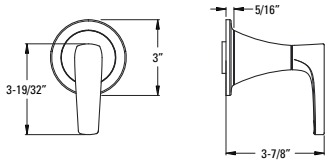

Features:
- Metal Lever Handle and Matching Flange
- Can Be Used with Ø15-2WDX for Cal Green Compliant Applications

Must Order Ø15-4WDX or Ø15-2WDX Rough In Valve Separately. See Valve Section.

Slide Bar/Hand Shower Kit

LG16-3FWC	Polished Chrome	3	$325
LG16-3FWK	Brushed Nickel	3	$457
LG16-3FWD	Polished Nickel	3	$457
LG16-3FWY	Tuscan Bronze	3	$540
LG16-3FWBG	Brushed Gold	3	$589

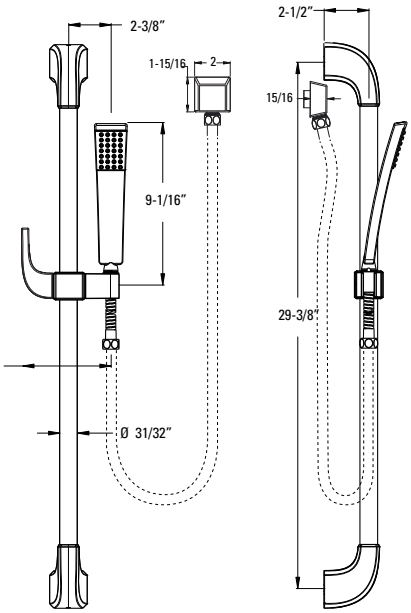

Features:
- Complete Slide Bar Package with Handheld Shower, Hose, Drop Elbow, and Slide Bar, and Wall Mount Bracket
- All Metal Slide Bar
- Easy To Clean Spray Nozzles on Handheld Showerhead
- Metal Hose with Matching Finish
- Back Flow Prevention
- Works with Park Avenue Diverter Trim and Valve
- Not to Be Used as a Grab Bar
- Hand Shower 1.8 gpm @ 80 psi

CEC Compliant | Cal Green Compliant | Meets EPA WaterSense℠ Standards | NSF Lead-Free Certified | ADA Compliant | UltraSeal™ | SecurePfit™

Raincan Showerhead

Model	Finish	Case Qty	List Price
973-228A	Polished Chrome	6	$91
973-228J	Brushed Nickel	6	$117
973-228D	Polished Nickel	6	$117
973-228Y	Tuscan Bronze	6	$128
973-228BG	Brushed Gold	6	$140

Technical Info

Features:
- Raincan Showerhead
- Easy To Clean Spray Nozzles
- Shower Arm and Flange Sold Separately
- Order 941-Ø55Ø for 1.5 gpm Showerhead Insert
- Showerhead 1.8 gpm @ 80 psi

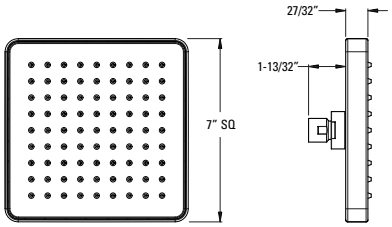

Shower Flange

96Ø-2Ø9A	Polished Chrome	1	$20
96Ø-2Ø9J	Brushed Nickel	1	$24
96Ø-2Ø9D	Polished Nickel	1	$25
96Ø-2Ø9Y	Tuscan Bronze	1	$27
96Ø-2Ø9BG	Brushed Gold	1	$38

Features:
- All Metal
- Matches Finish and Style

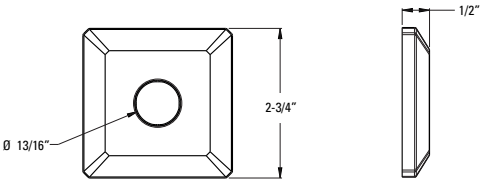

CEC Compliant | Cal Green Compliant | Meets EPA WaterSense℠ Standards | NSF Lead-Free Certified | ADA Compliant | UltraSeal™ | SecurePfit™

Park Avenue™ - Tub & Shower

Straight Shower Arm

Model	Finish	Case Qty	List Price
973-1Ø3A	Polished Chrome	1	$77
973-1Ø3J	Brushed Nickel	1	$93
973-1Ø3D	Polished Nickel	1	$100
973-1Ø3Y	Tuscan Bronze	1	$116
973-1Ø3BG	Brushed Gold	1	$133

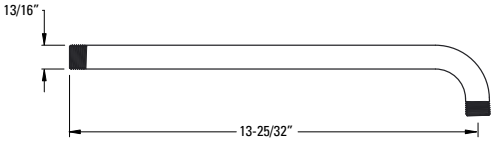

Technical Info

Features:
- 14" Shower Arm
- Brass Shower Arm
- 1/2" NPT Male Connections

Tub Spout

92Ø-1Ø1A	Polished Chrome	1	$148
92Ø-1Ø1J	Brushed Nickel	1	$164
92Ø-1Ø1D	Polished Nickel	1	$173
92Ø-1Ø1Y	Tuscan Bronze	1	$199
92Ø-1Ø1BG	Brushed Gold	1	$221

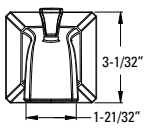

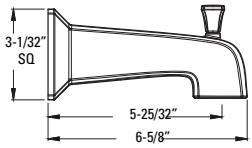

Features:
- All Metal
- Quick Connect Diverted Spout

60" Hose

951-335A	Polished Chrome	6	$47
951-335J	Brushed Nickel	6	$110
951-335D	Polished Nickel	6	$110
951-335Y	Tuscan Bronze	6	$148
951-335BG	Brushed Gold	6	$193

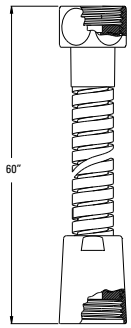

Features:
- Anti-Twist Hose
- Matching Finish Metal Hose

Square Drop Elbow

Model	Finish	Case Qty	List Price
973-279A	Polished Chrome	8	$40
973-279J	Brushed Nickel	8	$61
973-279D	Polished Nickel	8	$59
973-279Y	Tuscan Bronze	8	$77
973-279BG	Brushed Gold	8	$71

Technical Info

Features:
- IP Connection
- Matching Finish

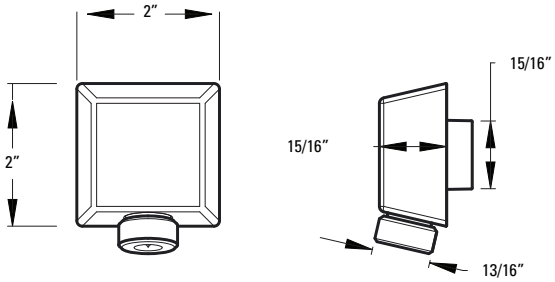

Hand Shower

LG16-FW1C	Polished Chrome	3	$63
LG16-FW1K	Brushed Nickel	3	$74
LG16-FW1D	Polished Nickel	3	$74
LG16-FW1Y	Tuscan Bronze	3	$84
LG16-FW1BG	Brushed Gold	3	$107

Features:
- Single-Function Hand Shower
- Easy To Clean Spray Nozzles
- Matching Finish
- Hand Shower 1.8 gpm @ 80 psi

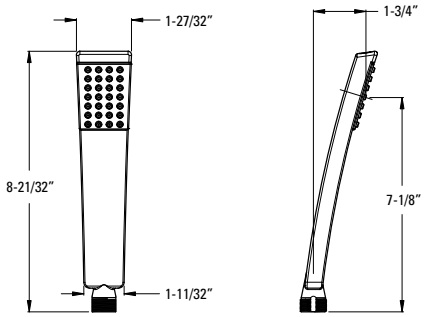

CEC Compliant | Cal Green Compliant | Meets EPA WaterSense℠ Standards | NSF Lead-Free Certified | ADA Compliant | UltraSeal™ | SecurePfit™

Park Avenue™ - Accessories

18" Towel Bar

Model	Finish	Case Qty	List Price
BTB-FE1C	Polished Chrome	3	$106
BTB-FE1K	Brushed Nickel	3	$119
BTB-FE1D	Polished Nickel	3	$119
BTB-FE1Y	Tuscan Bronze	3	$124
BTB-FE1BG	Brushed Gold	3	$191

Technical Info

Holes: · 2-Hole

Features:
- Premium Metal Construction
- Superior Mounting Posts
- Concealed Screw Installation
- Mounting Hardware Included

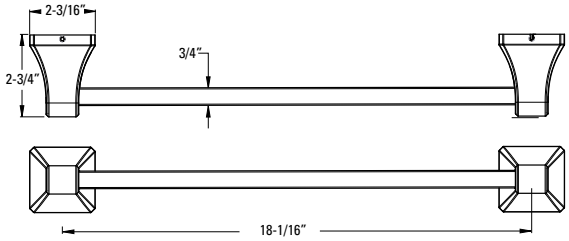

24" Towel Bar

Model	Finish	Case Qty	List Price
BTB-FE2C	Polished Chrome	3	$123
BTB-FE2K	Brushed Nickel	3	$134
BTB-FE2D	Polished Nickel	3	$134
BTB-FE2Y	Tuscan Bronze	3	$154
BTB-FE2BG	Brushed Gold	3	$222

Holes: · 2-Hole

Features:
- Premium Metal Construction
- Superior Mounting Posts
- Concealed Screw Installation
- Mounting Hardware Included

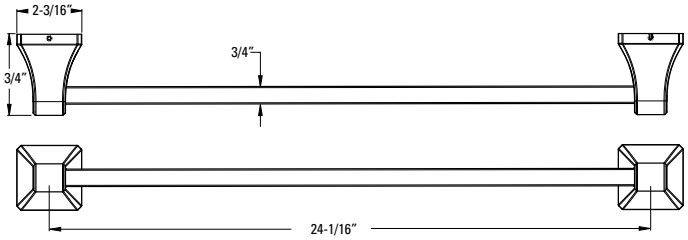

Towel Ring

Model	Finish	Case Qty	List Price
BRB-FE1C	Polished Chrome	3	$82
BRB-FE1K	Brushed Nickel	3	$91
BRB-FE1D	Polished Nickel	3	$91
BRB-FE1Y	Tuscan Bronze	3	$111
BRB-FE1BG	Brushed Gold	3	$147

Holes: · 1-Hole

Features:
- Premium Metal Construction
- Superior Mounting Posts
- Concealed Screw Installation
- Mounting Hardware Included

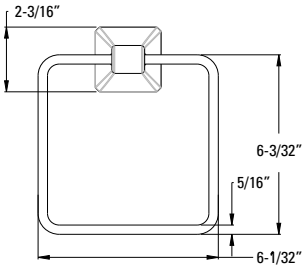

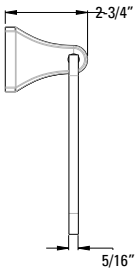

Paper Holder

Model	Finish	Case Qty	List Price
BPH-FE1C	Polished Chrome	3	$82
BPH-FE1K	Brushed Nickel	3	$111
BPH-FE1D	Polished Nickel	3	$111
BPH-FE1Y	Tuscan Bronze	3	$123
BPH-FE1BG	Brushed Gold	3	$147

Technical Info

Holes: · 1-Hole

Features:
· Premium Metal Construction
· Superior Mounting Posts
· Concealed Screw Installation
· Mounting Hardware Included

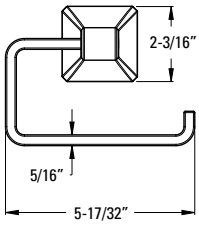

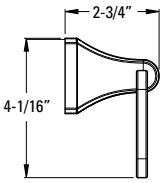

Robe Hook

Model	Finish	Case Qty	List Price
BRH-FE1C	Polished Chrome	3	$43
BRH-FE1K	Brushed Nickel	3	$48
BRH-FE1D	Polished Nickel	3	$48
BRH-FE1Y	Tuscan Bronze	3	$57
BRH-FE1BG	Brushed Gold	3	$76

Holes: · 1-Hole

Features:
· Premium Metal Construction
· Superior Mounting Posts
· Concealed Screw Installation
· Mounting Hardware Included

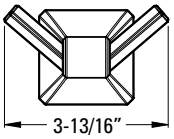

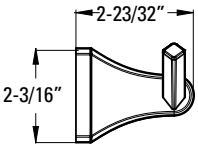

Iyla

In Gaelic, Iyla means island. The soft curves of this collection lends itself to the island and water lover. Growing from the soft wave shape that wraps its way around the spouts, Iyla presents the tranquility of ocean living no matter where you are.

Single Control Vessel Lavatory
LG4Ø-TRØC

Single Control Lavatory
LG42-TRØC

8" Widespread Lavatory
LG49-TRØC

3-Hole Roman Tub
RT6-5TRC

4-Hole Roman Tub
LG6-4TRC

Slide Bar/
Hand Shower
Kit
LG16-3TRC

Tub & Shower
LG89-8TRC

Shower Only
LG89-7TRC

Valve Only
R89-1TRC

Diverter Trim
Ø16-TR1C

Accessories

18" & 24" Towel Bar
BTB-TR1C & BTB-TR2C

Towel Ring
BRB-TRØC

Paper Holder
BPH-TRØC

Robe Hook
BRH-TRØC

Iyla™ - Lavatory Faucets

Single Control Vessel Lavatory

Model	Finish	Case Qty	List Price
LG4Ø-TRØC	Polished Chrome	3	$339
LG4Ø-TRØK	Brushed Nickel	3	$468
LG4Ø-TRØY	Tuscan Bronze	3	$501

Technical Info

Holes: · 1-Hole Installation

Features:
- Ceramic Disc Valve
- Metal Lever Handle
- Single Post Mounting Ring
- Grid Strainer Sold Separately
- 1.2 gpm @ 60 psi

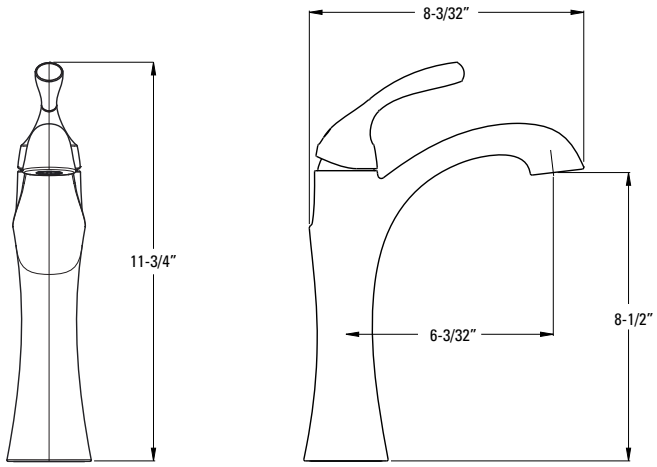

Single Control Lavatory

LG42-TRØC	Polished Chrome	3	$280
LG42-TRØK	Brushed Nickel	3	$376
LG42-TRØY	Tuscan Bronze	3	$435

Holes: · 1 or 3-Hole 4" Installation

Features:
- Ceramic Disc Valve
- Metal Lever Handle
- Single Post Mounting Ring
- 3-Hole Deckplate Sold Separately 961-146*
- All Metal Pop-Up
- 1.2 gpm @ 60 psi

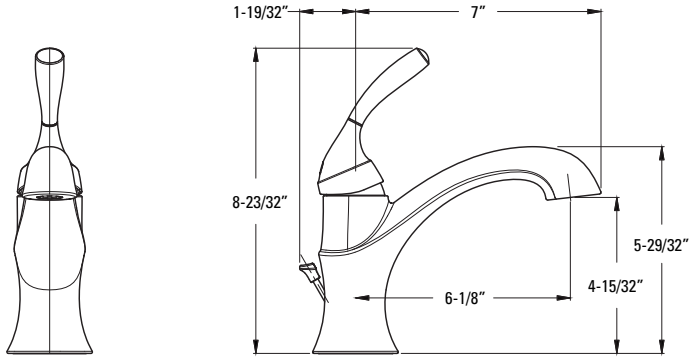

CEC Compliant · Cal Green Compliant · Meets EPA WaterSense℠ Standards · NSF Lead-Free Certified · ADA Compliant · UltraSeal™ · SecurePfit™

8" Widespread Lavatory

Model	Finish	Case Qty	List Price
LG49-TRØC	Polished Chrome	3	$356
LG49-TRØK	Brushed Nickel	3	$475
LG49-TRØY	Tuscan Bronze	3	$551

Technical Info

Holes: · 3-Hole 8–15" Installation

Features:
- Ceramic Disc Valves
- Metal Lever Handles
- All Metal Pop-Up
- Quick Connect Hose Assembly
- Order 971-Ø86Ø to Increase Max. Install Depth to 3"
- 1.2 gpm @ 60 psi

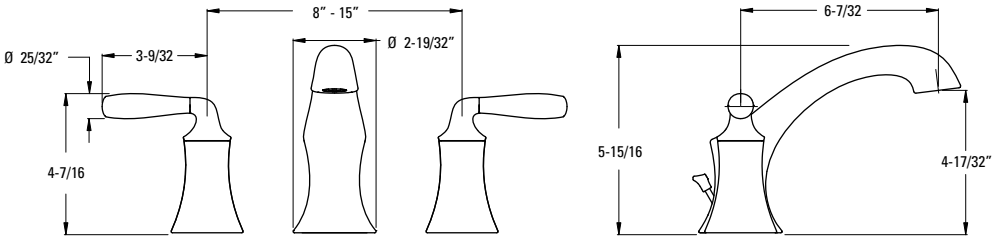

Universal Grid Strainer

972-1Ø4A	Polished Chrome	6	$51
972-1Ø4J	Brushed Nickel	6	$59
972-1Ø4Y	Tuscan Bronze	6	$65

Features:
- All Metal Grid Strainer
- With Overflow
- 1 1/4" Tailpiece

Universal Grid Strainer

972-1Ø3A	Polished Chrome	6	$51
972-1Ø3J	Brushed Nickel	6	$59
972-1Ø3Y	Tuscan Bronze	6	$65

Features:
- All Metal Grid Strainer
- No Overflow
- 1 1/4" Tailpiece

CEC Compliant · Cal Green Compliant · Meets EPA WaterSense℠ Standards · NSF Lead-Free Certified · ADA Compliant · UltraSeal™ · SecurePfit™

Iyla™ - Tub Fillers

Roman Tub Trim

Model	Finish	Case Qty	List Price
RT6-5TRC	Polished Chrome	3	$439
RT6-5TRK	Brushed Nickel	3	$534
RT6-5TRY	Tuscan Bronze	3	$587

Technical Info

Holes: · 3-Hole

Features:
· Ceramic Disc Valves
· Metal Lever Handles
· Fixed Spout

Must Order ØX6-Ø5ØR or ØX6-15ØR Rough In Valve Separately. See Valve Section.

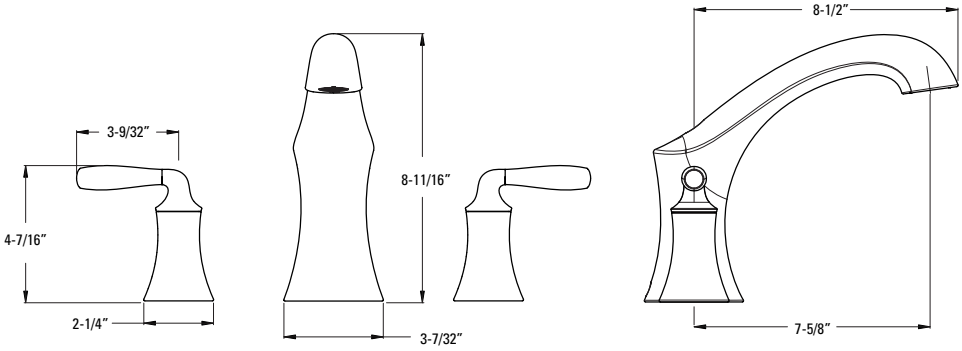

Roman Tub Trim with Hand Shower

LG6-4TRC	Polished Chrome	3	$522
LG6-4TRK	Brushed Nickel	3	$629
LG6-4TRY	Tuscan Bronze	3	$721

Holes: · 4-Hole

Features:
· Ceramic Disc Valves
· Metal Lever Handles
· Fixed Spout
· Handheld Shower
· Easy To Clean Spray Nozzles
· Hand Shower 1.8 gpm @ 80 psi

Must Order ØX6-44ØR Rough In Valve Separately. See Valve Section.

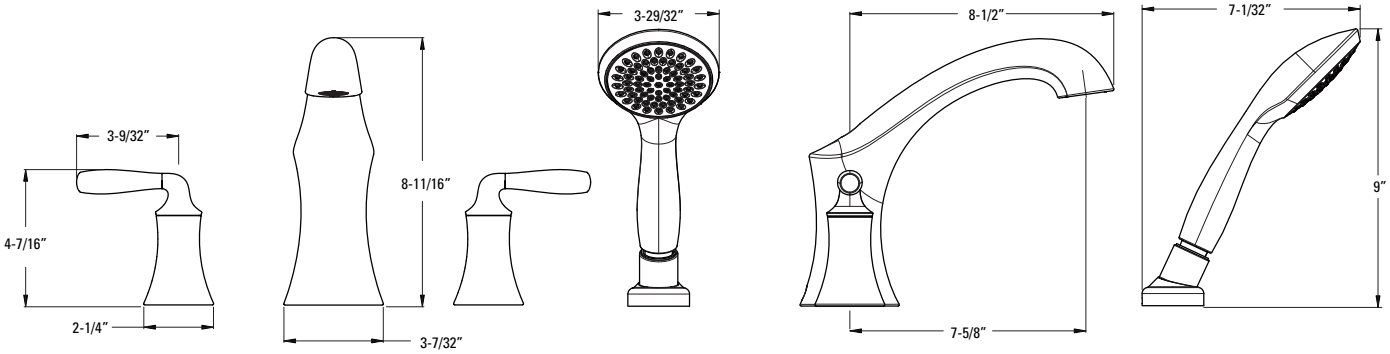

CEC Compliant · Cal Green Compliant · Meets EPA WaterSense℠ Standards · NSF Lead-Free Certified · ADA Compliant · UltraSeal™ · SecurePfit™

Pressure Balance Tub & Shower Trim

Model	Finish	Case Qty	List Price
LG89-8TRC	Polished Chrome	3	$345
LG89-8TRK	Brushed Nickel	3	$428
LG89-8TRY	Tuscan Bronze	3	$501

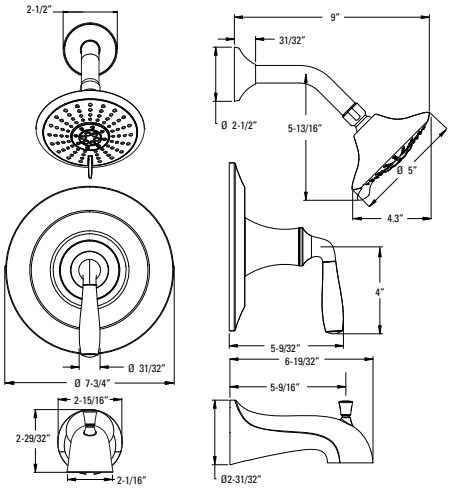

Technical Info

Features:
- SecurePfit™
- Metal Lever Handle
- Hot/Cold Indicator
- Decorative 5-Function Showerhead
- Easy To Clean Spray Nozzles
- Quick Connect Metal Diverted Tub Spout IP & Quick Connect
- Showerhead 1.8 gpm @ 80 psi

Must Order Pressure Balance Rough In Valve Separately. See Valve Section.

Pressure Balance Shower Trim

LG89-7TRC	Polished Chrome	3	$268
LG89-7TRK	Brushed Nickel	3	$339
LG89-7TRY	Tuscan Bronze	3	$422

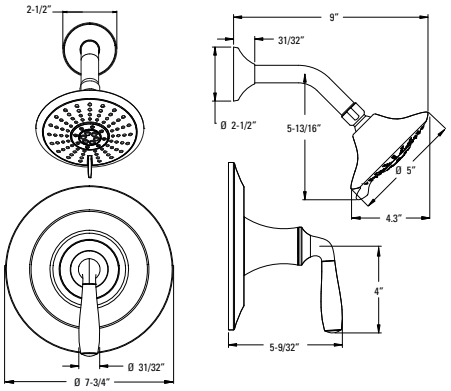

Features:
- SecurePfit™
- Metal Lever Handle
- Hot/Cold Indicator
- Decorative 5-Function Showerhead
- Easy To Clean Spray Nozzles
- Showerhead 1.8 gpm @ 80 psi

Must Order Pressure Balance Rough In Valve Separately. See Valve Section.

CEC Compliant | Cal Green Compliant | Meets EPA WaterSense℠ Standards | NSF Lead-Free Certified | ADA Compliant | UltraSeal™ | SecurePfit™

Iyla™ - Tub & Shower

Pressure Balance Valve Only Trim

Model	Finish	Case Qty	List Price
R89-1TRC	Polished Chrome	3	$162
R89-1TRK	Brushed Nickel	3	$209
R89-1TRY	Tuscan Bronze	3	$245

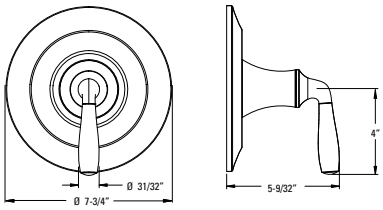

Technical Info

Features:
- SecurePfit
- Metal Lever Handle
- Hot/Cold Indicator

Must Order Pressure Balance Rough in Valve Separately. See Valve Section.

Diverter Trim Only

Ø16-TR1C	Polished Chrome	3	$120
Ø16-TR1K	Brushed Nickel	3	$131

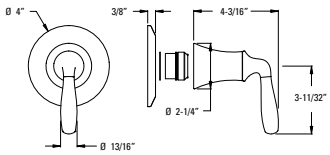

Features:
- SecurePfit™
- Metal Lever Handle and Matching Flange
- Can Be Used with Ø15-2WDX for Cal Green Compliant Applications

Must Order Ø15-4WDX or Ø15-2WDX Rough In Valve Separately. See Valve Section.

Iyla Slide Bar/Hand Shower Kit

LG16-3TRC	Polished Chrome	3	$334
LG16-3TRK	Brushed Nickel	3	$468
LG16-3TRY	Tuscan Bronze	3	$569

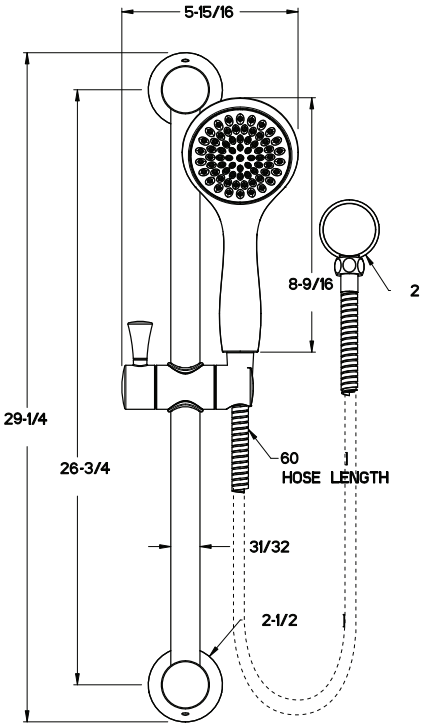

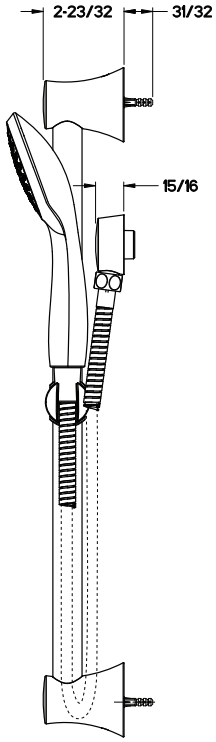

Features:
- Complete Slide Bar Package with Hand Shower, Hose, Drop Elbow, and Slide Bar
- All Metal Slide Bar
- Easy To Clean Spray Nozzles
- Metal Hose in Matching Finish
- Back Flow Prevention
- Works with Iyla Diverter Trim and Valve
- Not to Be Used as a Grab Bar
- Hand Shower 1.8 gpm @ 80 psi

CEC Compliant | Cal Green Compliant | Meets EPA WaterSense℠ Standards | NSF Lead-Free Certified | ADA Compliant | UltraSeal™ | SecurePfit™

Iyla Multi-function Showerhead

Model	Finish	Case Qty	List Price
LG15-TRØC	Polished Chrome	12	$90
LG15-TRØK	Brushed Nickel	12	$114
LG15-TRØY	Tuscan Bronze	12	$129

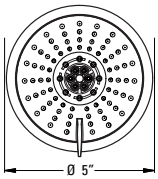

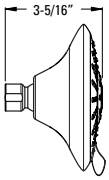

Technical Info

Features:
- 5-Function Showerhead
- Easy To Clean Spray Nozzles
- Shower Arm and Flange Sold Separately
- Showerhead 1.8 gpm @ 80 psi

Shower Flange

96Ø-262A	Polished Chrome	1	$11
96Ø-262J	Brushed Nickel	1	$13
96Ø-262Y	Tuscan Bronze	1	$16

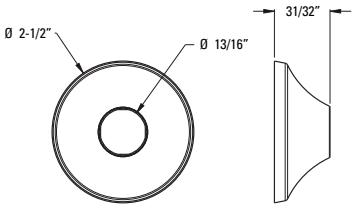

Features:
- All Metal
- Matches Finish and Style

Curved Shower Arm

973-Ø3ØA	Polished Chrome	1	$17
973-Ø3ØJ	Brushed Nickel	1	$18
973-Ø3ØY	Tuscan Bronze	1	$36

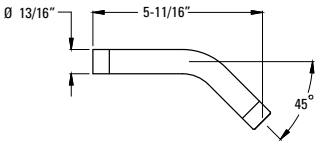

Features:
- 6" Brass Shower Arm
- 1/2" NPT Male Connections

Tub Spout

92Ø-139A	Polished Chrome	1	$113
92Ø-139J	Brushed Nickel	1	$125
92Ø-139Y	Tuscan Bronze	1	$131

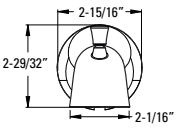

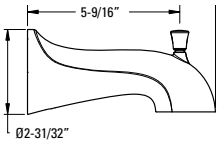

Features:
- All Metal Spout
- IP & Quick Connect Diverted Tub Spout

CEC Compliant | Cal Green Compliant | Meets EPA WaterSense℠ Standards | NSF Lead-Free Certified | ADA Compliant | UltraSeal™ | SecurePfit™

Iyla™ - Tub & Shower

60" Hose

Model	Finish	Case Qty	List Price
951-335A	Polished Chrome	6	$47
951-335J	Brushed Nickel	6	$110
951-335Y	Tuscan Bronze	6	$148

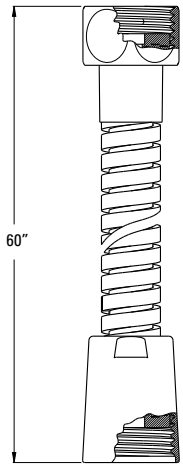

Technical Info

Features:
- Anti-Twist Hose
- Matching Finish Metal Hose

Round Drop Elbow

973-272A	Polished Chrome	8	$40
973-272J	Brushed Nickel	8	$61
973-272Y	Tuscan Bronze	8	$77

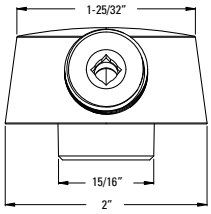

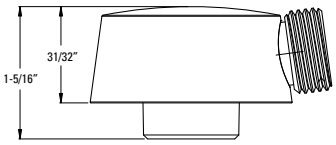

Features:
- 1/2" IP Connection
- Matching Finish

Hand Shower

LG16-TRØC	Polished Chrome	12	$60
LG16-TRØK	Brushed Nickel	12	$71
LG16-TRØY	Tuscan Bronze	12	$82

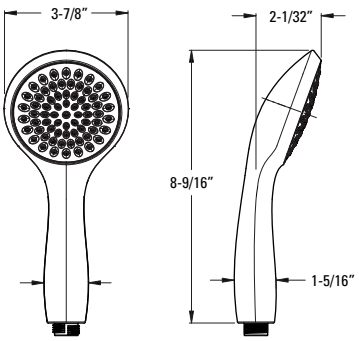

Features:
- Single Function Hand Shower
- Easy To Clean Spray Nozzles
- Matching Finish
- Hand Shower 1.8 gpm @ 80 psi

CEC Compliant | Cal Green Compliant | Meets EPA WaterSense℠ Standards | NSF Lead-Free Certified | ADA Compliant | UltraSeal™ | SecurePfit™

18" Towel Bar

Model	Finish	Case Qty	List Price
BTB-TR1C	Polished Chrome	3	$96
BTB-TR1K	Brushed Nickel	3	$108
BTB-TR1Y	Tuscan Bronze	3	$119

Technical Info

Holes: · 2-Hole

Features:
- Premium Metal Construction
- Superior Mounting Posts
- Concealed Screw Installation
- Mounting Hardware Included

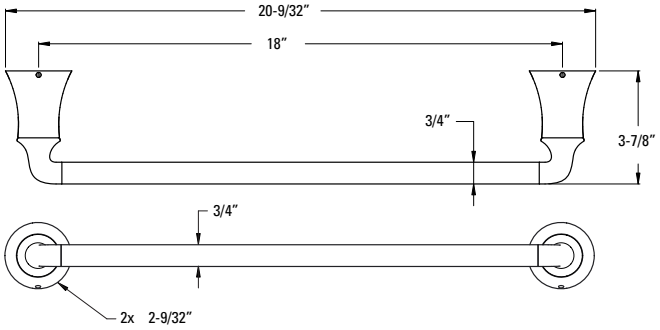

24" Towel Bar

BTB-TR2C	Polished Chrome	3	$108
BTB-TR2K	Brushed Nickel	3	$121
BTB-TR2Y	Tuscan Bronze	3	$134

Holes: · 2-Hole

Features:
- Premium Metal Construction
- Superior Mounting Posts
- Concealed Screw Installation
- Mounting Hardware Included

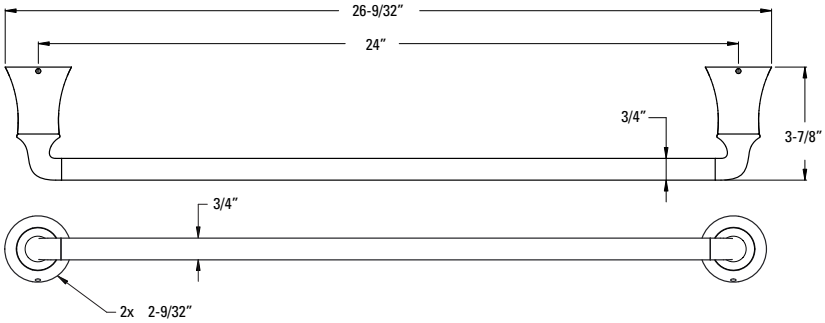

Towel Ring

BRB-TRØC	Polished Chrome	3	$72
BRB-TRØK	Brushed Nickel	3	$90
BRB-TRØY	Tuscan Bronze	3	$106

Holes: · 1-Hole

Features:
- Premium Metal Construction
- Superior Mounting Posts
- Concealed Screw Installation
- Mounting Hardware Included

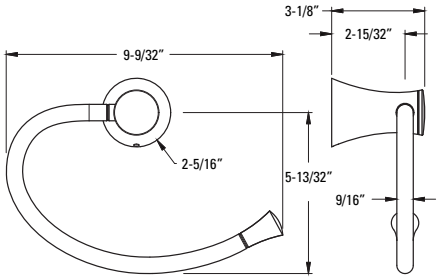

Iyla™ - Accessories

Paper Holder

Model	Finish	Case Qty	List Price
BPH-TRØC	Polished Chrome	3	$72
BPH-TRØK	Brushed Nickel	3	$90
BPH-TRØY	Tuscan Bronze	3	$106

Technical Info

Holes: · 2-Hole

Features:
- All Metal Swivel Mount Paper Holder
- Superior Mounting Posts
- Concealed Screw Installation
- Mounting Hardware Included

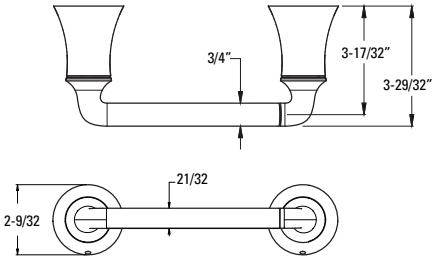

Robe Hook

Model	Finish	Case Qty	List Price
BRH-TRØC	Polished Chrome	3	$38
BRH-TRØK	Brushed Nickel	3	$43
BRH-TRØY	Tuscan Bronze	3	$49

Holes: · 1-Hole

Features:
- Premium Metal Construction
- Superior Mounting Posts
- Concealed Screw Installation
- Mounting Hardware Included

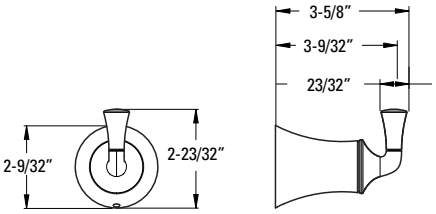

KITCHEN

Xtract™ 2

React™ 3

Pull-Down/Pull-Out Faucets . . .4

Culinary. 9

Single Control Faucets 10

Prep/Bar/Laundry Faucets. 12

Kitchen Accessories. 14

Xtract™

Advanced Filtration. 2X Faster

Pfister faucets with Xtract technology deliver great-tasting filtered and regular tap water from a single faucet, 2X faster than typical water filter products. Xtract uses GE® 2X High Flow Filtration which reduces contaminants such as pharmaceuticals, chlorine, and lead.

XTRACT™ Filter Mode
Activate Xtract Filter Mode by simply moving the handle back.

Tap Water
Regular handle use for washing dishes.

GE APPLIANCES

2X High Flow Filtration Included

Up to
6 Month
Filter Life

Pfister faucets with Xtract™ reduce the following contaminants from tap water:

- Chlorine Taste & Odor
- Select Pharmaceuticals †
- Select Pesticides, Insecticides & Herbicides
- Lead & Mercury

† REDUCES: Atrazine, Lindane, Toxaphene, Mercury, Atenol, Carbamazepine, Trimethoprim, Linuron, Estrone, BPA, and Nonyl Phenol

† Incidental contaminants/emerging compounds which have been detected in drinking water supplies at trace levels can affect public acceptance/perception of drinking water quality

WARNING: Do not use with water that is microbiologically unsafe or of unknown quality, without adequate disinfection before or after the system

React™

Touch-Free Technology

Pfister faucets with React™ put you in charge. Speed through food prep, dish washing and clean-up. Reliable, touch-free operation keeps the spread of germs in check and reduces fingerprints and water spots.

REACT™ Sensor

Simply guide your hand within 3" in front of the sensor range to turn the water on or off.

High-Temperature Limit Stop

Temp Adjust gives you the freedom to dial in your ideal water temperature in sensor mode. Set it once and forget it or adjust it as often as you like.

OPEN VALVE SYSTEM

By tilting the handle to the outward position, it gives you a clear visual indicator when the electronic mode is engaged.

MANUAL OVERRIDE

The sensor can be overridden by turning the dial on the control box counter-clockwise. The faucet can then be used manually.

THREE-FUNCTION SPRAYHEAD

Toggle between spray, stream, and pause modes right in the palm of your hand for efficient rinsing, cleaning, and filling functionality.

Lita™ with Xtract™
Single Handle Pull-Down Faucet with Xtract™ Filtration Technology

SHOWROOM PREFERRED

Model	Finish	Case Qty	List Price
GT529-FLC	Polished Chrome	3	$752
GT529-FLS	Stainless Steel	3	$811

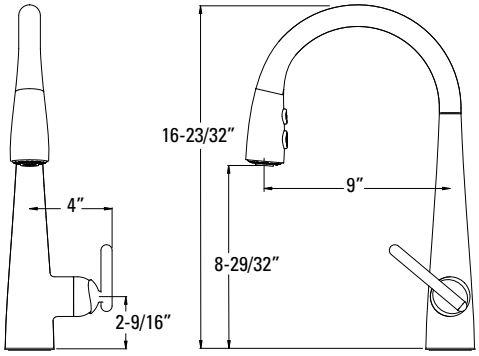

Technical Info

Holes: · 1 or 3-Hole 8" Installation

Features:
- XTRACT™ Filter Mode Push Handle Back For Filtered Water
- Metal AccuDock™ Sprayhead
- Quick and Easy Install
- Ceramic Disc Valve
- High Arc Pull-Down Swivel Spout
- Metal Lever Handle
- Three-Function Sprayhead: Stream, Spray, and Pause
- Forward Only Handle Operation
- Single Post Mounting Ring Included
- Matching Soap Dispenser (Sold Separately)
- Matching Deck Plate (961-168*) Sold Seperately
- 1.8 gpm @ 60 psi
- 1.0 gpm in Filter Mode

Stellen™ with React™
Single Handle Pull-Down Faucet

LG529-ESAC	Polished Chrome	3	$406
LG529-ESAS	Stainless Steel	3	$482
LG529-ESAB	Matte Black	3	$552

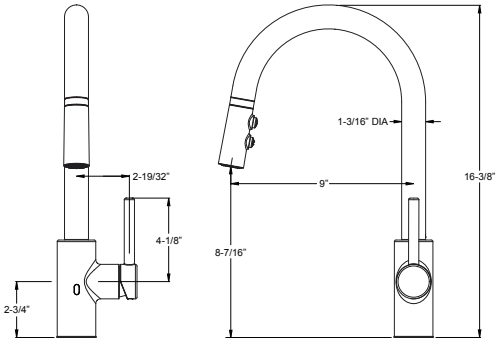

Holes: · 1 or 3-Hole 8" Installation

Features:
- React™: Touch-Free Sensor Technology
- Smartstop 3-Minute Auto Shut Off
- Temp Adjust Allows For Above Deck Temperature Control
- AccuDock™ Sprayhead
- Ceramic Disc Valve
- Pfast Connect Supply Lines
- High Arc Pull-Down Swivel Spout
- Metal Lever Handle
- Three-Function Sprayhead: Stream, Spray, and Pause
- Forward Only Handle Operation
- Single Post Mounting Ring and 3-Hole Deckplate Included
- Battery Pack (952-ØØ7Ø) Sold Separately
- 1.8 gpm @ 60 psi

Kai™
Single Handle Pull-Down Faucet

SHOWROOM PREFERRED

GT529-IHC	Polished Chrome	3	$660
GT529-IHS	Stainless Steel	3	$719
GT529-IHB	Matte Black	3	$780

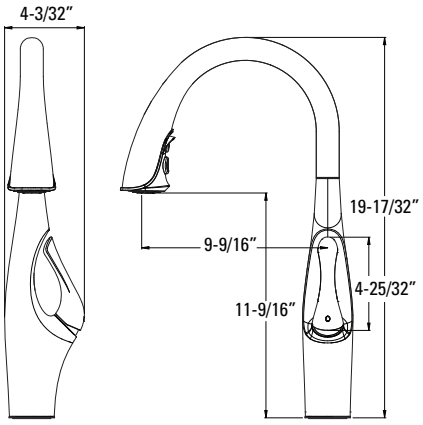

Holes: · 1 or 3-Hole 8" Installation

Features:
- Hidden Pull-Out Sprayhead
- Ceramic Disc Valve
- High Arc Pull-Down Swivel Spout
- Metal Lever Handle
- Three-Function Sprayhead: Stream, Spray, and Pause
- Forward Only Handle Operation
- Single Post Mounting Ring
- 3-Hole deckplate Sold Seperately (961-193B, 961-193S, 961-2Ø8A)
- Integrated Nylon Braided Supply Lines with 3/8" Threaded Compression Fittings
- Matching Soap Dispenser (Sold Separately)
- 1.8 gpm @ 60 psi

CEC Compliant · Cal Green Compliant · NSF Lead-Free Certified · ADA Compliant · Accudock™

Neera™
Single Handle Pull-Down Faucet

SHOWROOM PREFERRED

Model	Finish	Case Qty	List Price
LG529-NEC	Polished Chrome	3	$275
LG529-NES	Stainless Steel	3	$320
LG529-NEB	Matte Black	3	$369
LG529-NEBG	Brushed Gold	3	$389

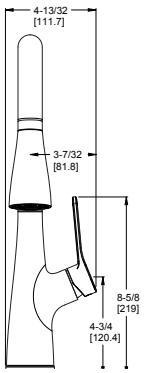

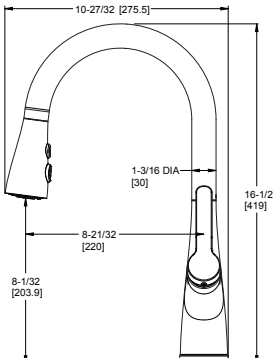

Technical Info

Holes: · 1 Installation

Features:
- Deckplate sold separately
- 1-hole installation
- High arc spout for added clearance and reach
- Pull-Down sprayhead, select from 3 water settings conveniently in the palm of your hand
- Advanced spray head docking system ensures a secure, tight connection to the faucet spout

Port Haven™
Bridge Kitchen Faucet with Side Spray

SHOWROOM PREFERRED

LG31-TDC	Polished Chrome	3	$695
LG31-TDS	Stainless Steel	3	$795
LG31-TDD	Polished Nickel	3	$795
LG31-TDY	Tuscan Bronze	3	$820

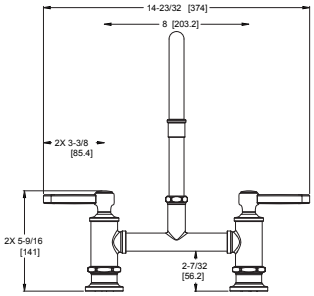

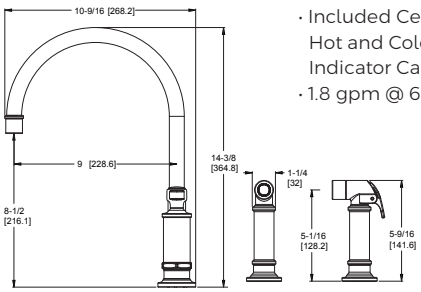

Holes: · 3-Hole 8" Installation

Features:
- Ceramic Disc Valves
- High Arc Pull-Down Swivel Spout
- Optional matching side sprayer included
- Metal Lever Handles
- 8" On Center
- Included Ceramic and Metal Hot and Cold Indicator Caps
- 1.8 gpm @ 60 psi

Lita™
Single Handle Pull-Down Faucet

SHOWROOM PREFERRED

GT529-SMC	Polished Chrome	3	$457
GT529-SMS	Stainless Steel	3	$517
GT529-SMB	Matte Black	3	$548
GT529-SMBG	Brushed Gold	3	$491

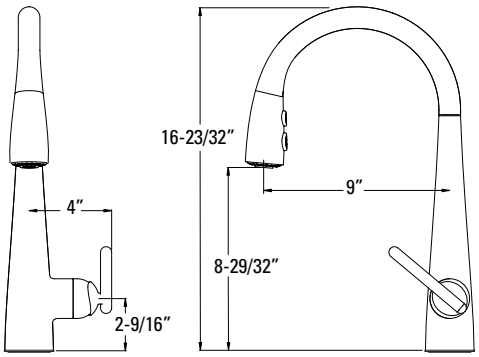

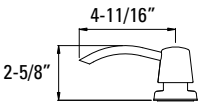

Holes: · 1 or 3-Hole 8" Installation

Features:
- Metal AccuDock™ Sprayhead
- Ceramic Disc Valve
- High Arc Pull-Down Swivel Spout
- Metal Lever Handle
- Three-Function Sprayhead: Stream, Spray, and Pause
- Forward Only Handle Operation
- Single Post Mounting Ring and 3-Hole Deckplate Included
- Matching Soap Dispenser Included
- Integrated Nylon Braided Supply Lines with 3/8" Threaded Compression Fittings
- 1.8 gpm @ 60 psi

CEC Compliant | Cal Green Compliant | NSF Lead-Free Certified | ADA Compliant | Accudock™

Ashfield™
Two Handle
Pull-Down Faucet

Model	Finish	Case Qty	List Price
LG531-YPK	Brushed Nickel	3	$954
LG531-YPY	Tuscan Bronze	3	$1,062

SHOWROOM PREFERRED

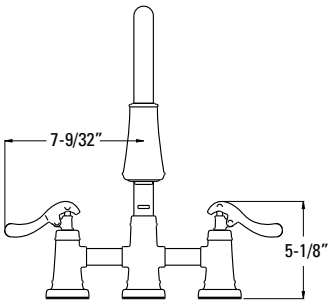

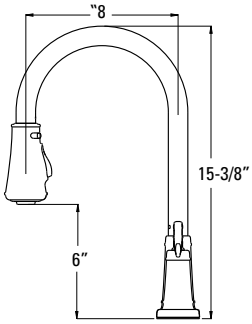

Technical Info

Holes: · 1, 2,3, or 4 Hole Installation

Features:
- Ceramic Disc Valves
- High Arc Pull-Down Swivel Spout
- Metal Lever Handles
- Two-Function Sprayhead with Volume Control: Stream and Spray Sprayhead
- 1.8 gpm @ 60 psi

Ashfield™
Single Handle Pull-Down
Faucet with Soap Dispenser

GT529-YPK	Brushed Nickel	3	$614
GT529-YPY	Tuscan Bronze	3	$714
GT529-YPU	Rustic Bronze	3	$695

SHOWROOM PREFERRED

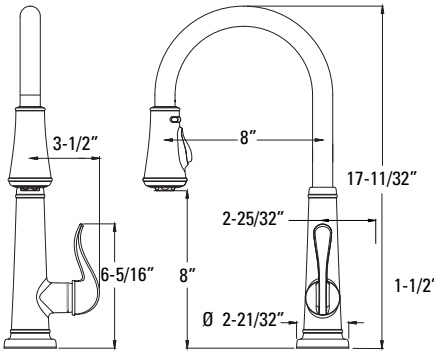

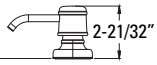

Holes: · 1, 2, 3 or 4-Hole Installation

Features:
- Ceramic Disc Valve
- High Arc Pull-Down Swivel Spout
- Metal Lever Handle
- Pfast Connect Supply Lines
- Two-Function Sprayhead with Volume Control: Stream and Spray
- Single Post Mounting Ring and 3-Hole Deckplate Included
- Matching Soap Dispenser
- 1.8 gpm @ 60 psi

CEC Compliant | Cal Green Compliant | NSF Lead-Free Certified | ADA Compliant | Accudock™

Mystique™
Single Handle Pull-Down Faucet with Soap Dispenser

SHOWROOM PREFERRED

Model	Finish	Case Qty	List Price
GT529-MDC	Polished Chrome	3	$444
GT529-MDS	Stainless Steel	3	$518

Technical Info

Holes: · 1, 2, 3, or 4-Hole Installation

Features:
- Ceramic Disc Valve
- High Arc Pull-Down Swivel Spout
- Metal Lever Handle
- Pfast Connect Supply Lines
- Three-Function Sprayhead: Stream, Spray, and Pause
- Single Post Mounting Ring and 3-Hole Deckplate Included
- Matching Soap Dispenser
- 1.8 gpm @ 60 psi

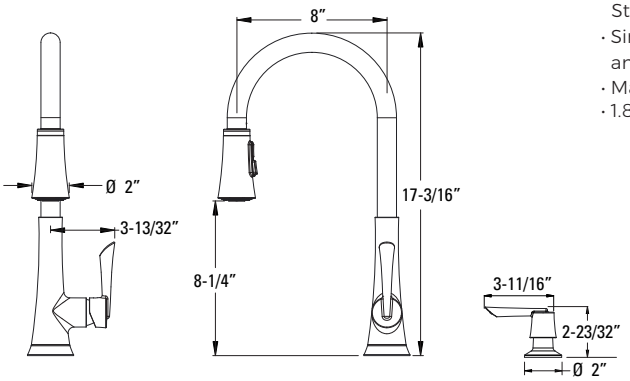

Hanover™
Single Handle Pull-Down Faucet with Soap Dispenser

SHOWROOM PREFERRED

GT529-TMC	Polished Chrome	3	$462
GT529-TMS	Stainless Steel	3	$545
GT529-TMY	Tuscan Bronze	3	$600

Holes: · 1, 2, 3 or 4-Hole Installation

Features:
- Ceramic Disc Valve
- High Arc Pull-Down Swivel Spout
- Metal Lever Handle
- Pfast Connect Supply Lines
- Two-Function Sprayhead with Volume Control: Stream and Spray
- Single Post Mounting Ring and 3-Hole Deckplate Included
- Matching Soap Dispenser
- 1.8 gpm @ 60 psi

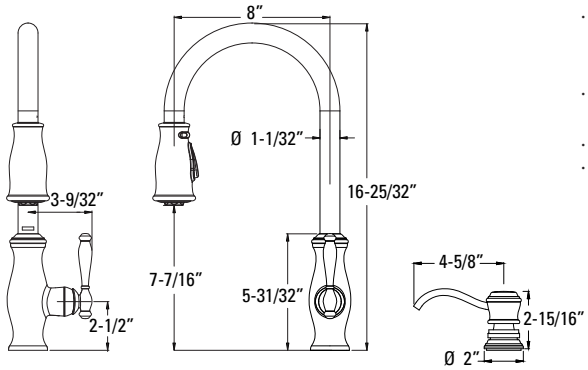

Wheaton™
Single Handle Pull-Down Faucet with Soap Dispenser

SHOWROOM PREFERRED

GT529-WH1C	Polished Chrome	3	$360
GT529-WH1S	Stainless Steel	3	$380
GT529-WH1Y	Tuscan Bronze	3	$417

Holes: · 1, 2, 3 or 4-Hole Installation

Features:
- Ceramic Disc Valve
- AccuDock™ Sprayhead
- High Arc Pull-Down Swivel Spout
- Forward Only Handle Operation
- Metal Lever Handle
- Two-Function Sprayhead: Stream and Spray
- Single Post Mounting Ring and 3-Hole Deckplate Included
- Matching Soap Dispenser
- Integrated Nylon Braided Supply Lines with 3/8" Threaded Compression Fittings
- 1.8 gpm @ 60 psi

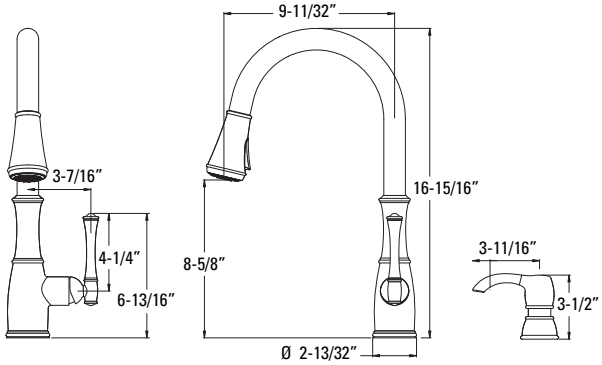

CEC Compliant · Cal Green Compliant · NSF Lead-Free Certified · ADA Compliant · Accudock™

Stellen™
Single Handle Pull-Down Faucet

Model	Finish	Case Qty	List Price
LG529-SAC	Polished Chrome	3	$278
LG529-SAS	Stainless Steel	3	$338
LG529-SAB	Matte Black	3	$427
LG529-SABG	Brushed Gold	3	$460

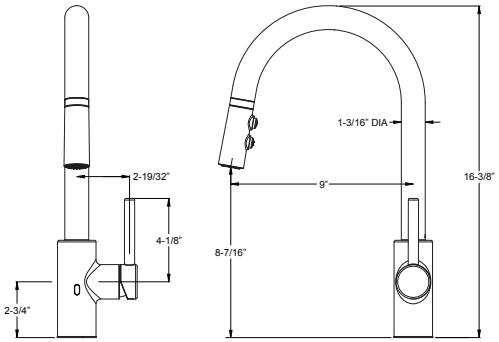

Technical Info

Holes: · 1 or 3-Hole 8" Installation

Features:
- AccuDock™ Sprayhead
- Ceramic Disc Valve
- High Arc Pull-Down Swivel Spout
- Metal Lever Handle
- Pfast Connect Supply Lines
- Three-Function Sprayhead: Stream, Spray, and Pause
- Forward Only Handle Operation
- Single Post Mounting Ring and 3-Hole Deckplate Included
- 1.8 gpm @ 60 psi

Hanover™
Single Handle Pull-Down Faucet with Soap Dispenser

SHOWROOM PREFERRED

GT526-TMC	Polished Chrome	3	$424
GT526-TMS	Stainless Steel	3	$500
GT526-TMY	Tuscan Bronze	3	$551

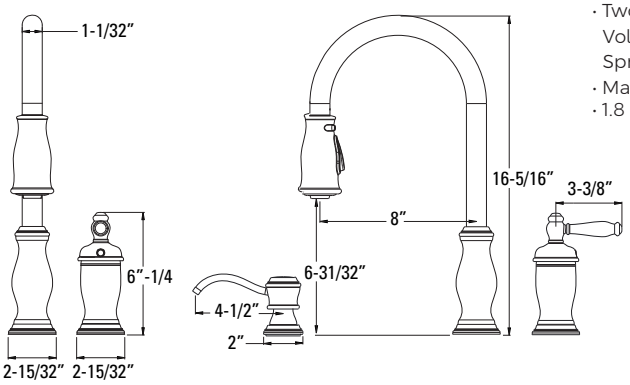

Holes: · 2 or 3-Hole 4-10" Installation

Features:
- Ceramic Disc Valve
- High Arc Pull-Down Swivel Spout
- Metal Lever Handle
- Two-Function Sprayhead with Volume Control: Stream and Spray
- Matching Soap Dispenser
- 1.8 gpm @ 60 psi

Marielle®
Single Handle Pull-Out Kitchen Faucet

SHOWROOM PREFERRED

LG532-7SS	Stainless Steel	3	$573
LG532-7YY	Tuscan Bronze	3	$600

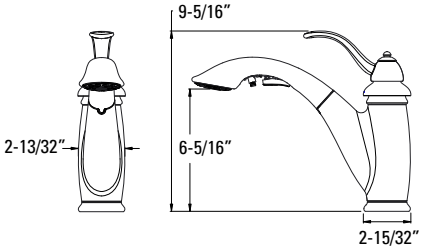

Holes: · 1 or 3-Hole 8" Installation

Features:
- Ceramic Disc Valve
- Metal Lever Handle
- 55" Stainless Steel Hose
- Single Post Mounting Ring and 3-Hole Deckplate Included
- Two-Function Sprayhead: Stream and Spray
- Swivel Spout
- 1.8 gpm @ 60 psi

CEC Compliant | Cal Green Compliant | NSF Lead-Free Certified | ADA Compliant | Accudock™

Neera™
Single Handle Pull-Down Culinary Faucet

Model	Finish	Case Qty	List Price
LG529-NECC	Polished Chrome	3	$375
LG529-NECS	Stainless Steel	3	$420
LG529-NECB	Matte Black	3	$469
LG529-NECBG	Brushed Gold	3	$489

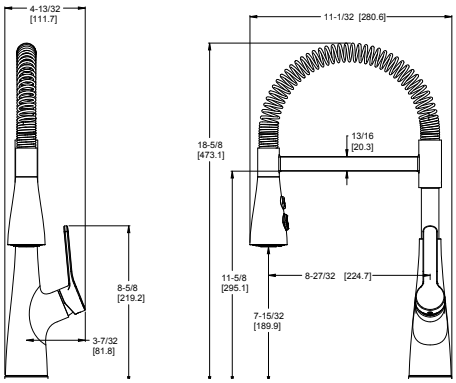

Technical Info

Holes: · 1 or 3-Hole 8" Installation

Features:
- Deckplate sold separately
- 1-hole installation
- High arc spout for added clearance and reach
- Pull-Down sprayhead, select from 3 water settings conveniently in the palm of your hand
- Advanced spray head docking system ensures a secure, tight connection to the faucet spout

Zuri™
Single Handle Pull-Down Culinary Faucet

SHOWROOM PREFERRED

LG529-MCC	Polished Chrome	3	$600
LG529-MCS	Stainless Steel	3	$660

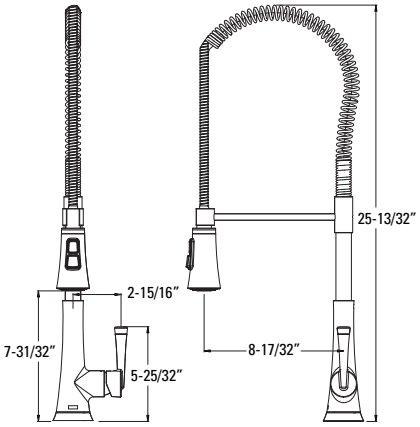

Holes: · 1 or 3-Hole 8" Installation

Features:
- Ceramic Disc Valve
- High Arc Pull-Down Swivel Coil Spout
- Metal Lever Handle
- Pfast Connect Supply Lines
- Three-Function Sprayhead: Stream, Spray, and Pause
- Single Post Mounting Ring and 3-Hole Deckplate Included
- 1.8 gpm @ 60 psi

CEC Compliant | Cal Green Compliant | NSF Lead-Free Certified | ADA Compliant | Accudock™

Arkitek™
Single Handle Pull-Out Kitchen Faucet

Model	Finish	Case Qty	List Price
LG534-LPMC	Polished Chrome	3	$231
LG534-LPMS	Stainless Steel	3	$273
LG534-LPMB	Matte Black	3	$378

Technical Info

Holes: · 1 or 3-Hole 8" Installation

Features:
- Ceramic Disc Valve
- Metal Lever Handle
- Two-Function Sprayhead: Stream and Spray
- Forward Only Handle Operation
- Single Post Mounting Ring and 3-Hole Deckplate Included
- 1.8 gpm @ 60 psi

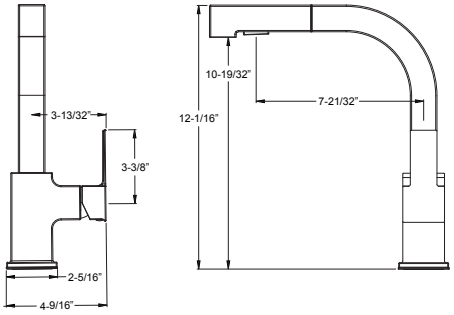

Parisa®
Single Handle Pull-Out Kitchen Faucet

LG534-7CC	Polished Chrome	3	$408
LG534-7SS	Stainless Steel	3	$490

Holes: · 1 or 3-Hole 8" Installation

Features:
- Ceramic Disc Valve
- Metal Lever Handle
- 55" Stainless Steel Hose
- Single Post Mounting Ring and 3-Hole Deckplate Included
- Two-Function Sprayhead: Stream and Spray
- Swivel Spout
- 1.8 gpm @ 60 psi

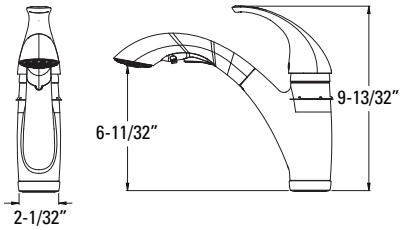

Ashfield™
Single Handle Kitchen Faucet with Spray & Soap Dispenser

LG26-4YPK	Brushed Nickel	3	$593
LG26-4YPY	Tuscan Bronze	3	$638

SHOWROOM PREFERRED

Holes: · 3 or 4-Hole 4-10" Installation

Features:
- Ceramic Disc Valve
- Metal Lever Handle
- High Arc Swivel Spout
- Quick Connect Fittings
- Matching Side Spray and Soap Dispenser
- 1.8 gpm @ 60 psi

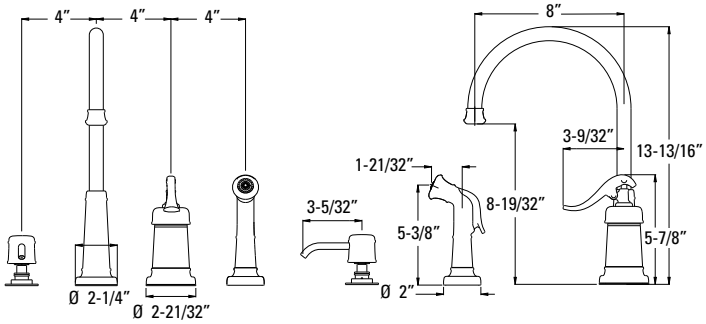

CEC Compliant · Cal Green Compliant · NSF Lead-Free Certified · ADA Compliant · Accudock™

Marielle®
Single Handle Kitchen Faucet with Spray

SHOWROOM PREFERRED

Model	Finish	Case Qty	List Price
LG26-3NSS	Stainless Steel	3	$582
LG26-3NYY	Tuscan Bronze	3	$717

Technical Info

Holes: · 3-Hole 4-10" Installation

Features:
- Ceramic Disc Valve
- Metal Lever Handle
- Matching Side Spray
- High Arc Swivel Spout
- Quick Connect Fittings
- 1.8 gpm @ 60 psi

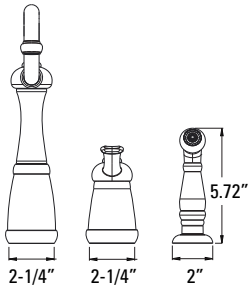

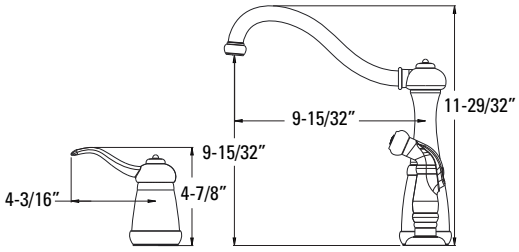

Marielle®
Single Handle Kitchen Faucet with Spray & Soap Dispenser

SHOWROOM PREFERRED

LG26-4NCC	Polished Chrome	3	$541
LG26-4NSS	Stainless Steel	3	$619
LG26-4NYY	Tuscan Bronze	3	$783
LG26-4NUU	Rustic Bronze	3	$753

Holes: · 3 or 4-Hole 4-10" Installation

Features:
- Ceramic Disc Valve
- Metal Lever Handle
- Matching Side Spray
- Matching Soap Dispenser
- High Arc Swivel Spout
- Quick Connect Fittings
- 1.8 gpm @ 60 psi

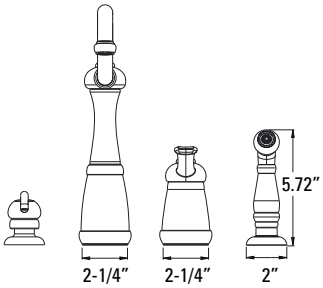

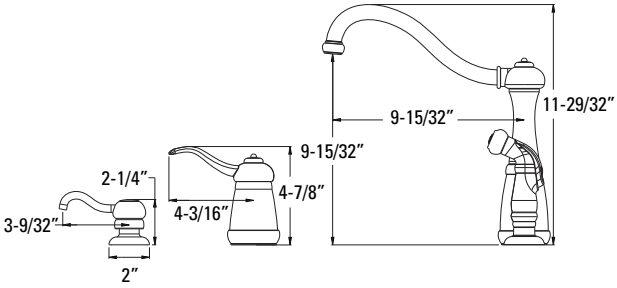

Avalon™
Single Handle Kitchen Faucet with Spray & Soap Dispenser

GT26-4CBC	Polished Chrome	3	$395
GT26-4CBS	Stainless Steel	3	$454
GT26-4CBY	Tuscan Bronze	3	$498

Holes: · 3 or 4-Hole 4-10" Installation

Features:
- Ceramic Disc Valve
- High Arc Swivel Spout
- Quick Connect Fittings
- Metal Lever Handle
- Matching Side Spray and Soap Dispenser
- 1.8 gpm @ 60 psi

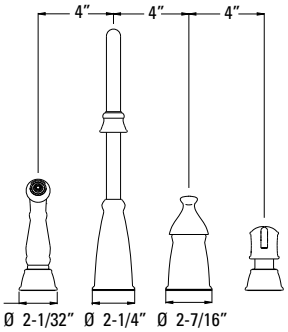

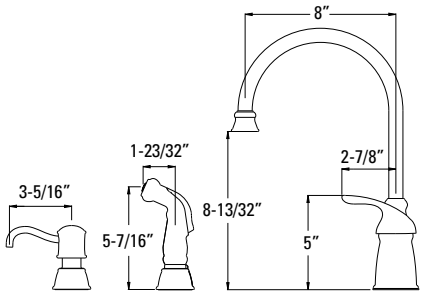

CEC Compliant · Cal Green Compliant · NSF Lead-Free Certified · ADA Compliant · Accudock™

Portland™
Single Handle Kitchen Faucet with Spray

Model	Finish	Case Qty	List Price
LG34-4PCØ	Polished Chrome	3	$194
LG34-4PSØ	Stainless Steel	3	$267
LG34-4PYØ	Tuscan Bronze	3	$326

Technical Info

Holes: · 2 or 4-Hole 8" Installation

Features:
- Ceramic Disc Valve
- Metal Lever Handle
- Single Post Mounting Ring and 3-Hole Deckplate Included
- Matching Side Spray
- Swivel Spout
- 1.8 gpm @ 60 psi

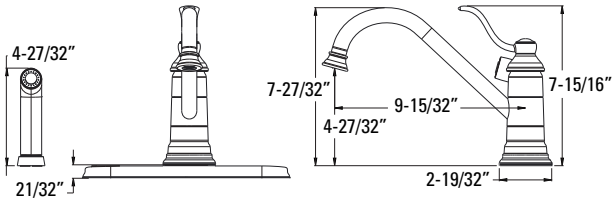

Avalon™
Two Handle Kitchen Faucet with Spray

GT36-4CBC	Polished Chrome	3	$302

Holes: · 4-Hole 8" Installation

Features:
- Ceramic Disc Valves
- High Arc Swivel Spout
- Metal Lever Handles
- Matching Side Spray
- 1.8 gpm @ 60 psi

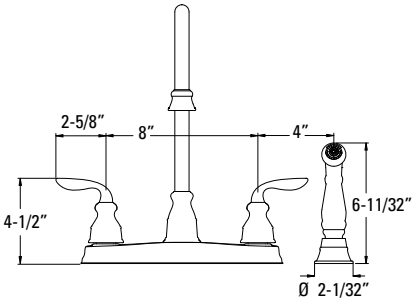

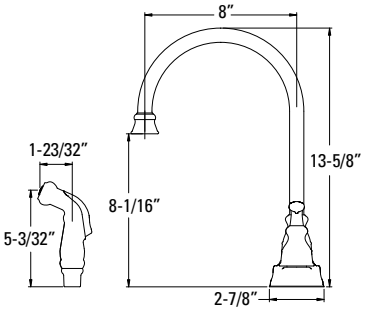

CEC Compliant · Cal Green Compliant · NSF Lead-Free Certified · ADA Compliant · Accudock™

Stellen™
Single Handle Bar Kitchen Faucet

Model	Finish	Case Qty	List Price
LG572-SAC	Polished Chrome	3	$259
LG572-SAS	Stainless Steel	3	$320
LG572-SAB	Matte Black	3	$398

Technical Info

Holes: · 1 or 3-Hole 8" Installation

Features:
- AccuDock™ Sprayhead
- Ceramic Disc Valve
- High Arc Pull-Down Swivel Spout
- Metal Lever Handle
- Three-Function Sprayhead: Stream, Spray, and Pause
- Forward Only Handle Operation
- Single Post Mounting Ring and 3-Hole Deckplate Included
- 1.8 gpm @ 60 psi

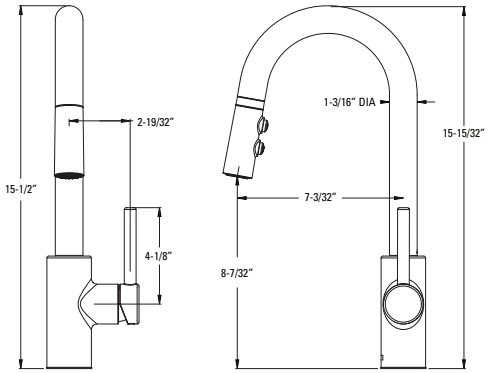

Marielle®
Single Handle Bar & Prep Faucet

SHOWROOM PREFERRED

GT72-M1SS	Stainless Steel	3	$382
GT72-M1YY	Tuscan Bronze	3	$431
GT72-M1UU	Rustic Bronze	3	$422

Holes: · 1 or 3-Hole 4" Installation

Features:
- Ceramic Disc Valve
- Metal Lever Handle
- 360 Degree Swivel Spout
- Single Post Mounting Ring and 3-Hole Deckplate Included
- 1.8 gpm @ 60 psi

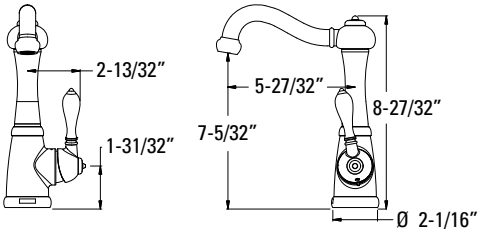

Port Haven™
Wall Mount Pot Filler

SHOWROOM PREFERRED

GT533-TDS	Stainless Steel	3	$705
GT533-TDD	Polished Nickel	3	$705
GT533-TDY	Tuscan Bronze	3	$753

Holes: · 1-Hole Installation

Features:
- Ceramic Disc Valves
- Metal Lever Handles
- Dual Handle Shut Off
- 3.0 gpm @ 60 psi

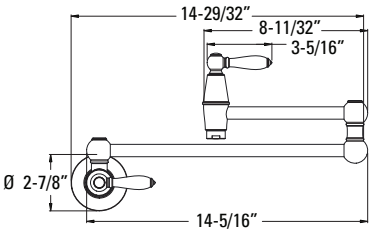

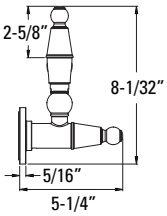

CEC Compliant · Cal Green Compliant · NSF Lead-Free Certified · ADA Compliant · Accudock™

Lita™
Wall Mount Pot Filler

SHOWROOM PREFERRED

Model	Finish	Case Qty	List Price
GT533-PFC	Polished Chrome	3	$633
GT533-PFS	Stainless Steel	3	$705
GT533-PFY	Tuscan Bronze	3	$753

Technical Info

Holes: · 1-Hole Installation

Features:
- Ceramic Disc Valves
- Metal Lever Handles
- Full Rotation
- Dual Handle Shut Off
- 3.0 gpm @ 60 psi

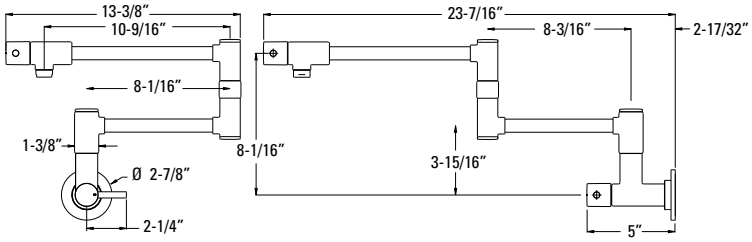

Laundry
Wall Mount Laundry Faucet

SHOWROOM PREFERRED

Ø69-Ø2ØØ	Unpolished Chrome	1	$115

Holes: · 2-Hole Installation

Features:
- Compression Valves
- Variable Two-Hole Installation From 4" to 9 3/8"
- Metal Blade Handles
- 1/2" IP Inlets
- 3/4" Hose Fitting Spout
- Swivel Spout

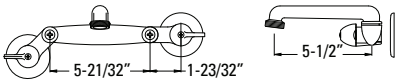

SHOWROOM PREFERRED

Marielle®
Soap Dispenser Kit

950-009A	Polished Chrome	1	$80
950-009S	Stainless Steel	1	$83
950-009Y	Tuscan Bronze	1	$112

Holes: · 1-Hole

Features:
- Easy Above Counter Refill
- Anti-Residue Design Prevents Soap/Lotion Buildup
- Finishes Match Pfister Faucets

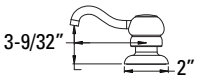

Kai™
Soap Dispenser Kit

SHOWROOM PREFERRED

KSD-IHCC	Polished Chrome	3	$199
KSD-IHSS	Stainless Steel	3	$224
KSD-IHBB	Matte Black	3	$240

Holes: · 1-Hole

Features:
- Easy Above Counter Refill
- Anti-Residue Design Prevents Soap/Lotion Buildup
- Finishes Match Pfister Faucets
- All Brass Construction
- Brass Shank

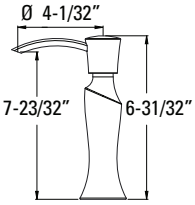

CEC Compliant · Cal Green Compliant · NSF Lead-Free Certified · ADA Compliant · Accudock™

Lita™
Soap Dispenser Kit

Model	Finish	Case Qty	List Price
92Ø-124A	Polished Chrome	1	$106
92Ø-124S	Stainless Steel	1	$105
92Ø-124D	Polished Nickel	1	$108
92Ø-124B	Matte Black	1	$124
92Ø-124BG	Brushed Gold	1	$130

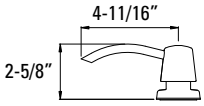

Technical Info

Holes: · 1-Hole

Features:
- Easy Above Counter Refill
- Anti-Residue Design Prevents Soap/Lotion Buildup
- Finishes Match Pfister Faucets
- All Metal Construction

Contemporary
Soap Dispenser Kit

SHOWROOM PREFERRED

KSD-K1CC	Polished Chrome	3	$90
KSD-K1SS	Stainless Steel	3	$115

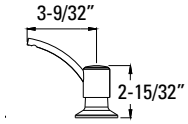

Holes: · 1-Hole

Features:
- Easy Above Counter Refill
- Anti-Residue Design Prevents Soap/Lotion Buildup
- Finishes Match Pfister Faucets

Mystique™
Soap Dispenser Kit

SHOWROOM PREFERRED

KSD-LCCC	Polished Chrome	3	$43
KSD-LCWW	White	3	$46
KSD-LCSS	Stainless Steel	3	$49

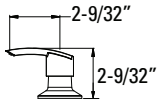

Holes: · 1-Hole

Features:
- Easy Above Counter Refill
- Anti-Residue Design Prevents Soap/Lotion Buildup
- Finishes Match Pfister Faucets

Air Gap Kit

941-685A	Polished Chrome	3	$24
941-685S	Stainless Steel	3	$29
941-685J	Brushed Nickel	3	$27
941-685D	Polished Nickel	3	$24
941-685B	Matte Black	3	$43
941-685Y	Tuscan Bronze	3	$43
941-685BG	Brushed Gold	3	$45

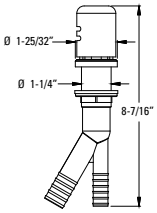

Holes: · 1-Hole

Features:
- Metal Cap
- Finishes Match Pfister Faucets

CEC Compliant | Cal Green Compliant | NSF Lead-Free Certified | ADA Compliant | Accudock™

BATH

Bath Reference Guide 18
Free-Standing Tub Fillers. 35

COLLECTIONS

Rhen™ 42
Kenzo™ 58
Ashfield® 74
Arterra™ 84
Marielle® 94
Contempra® 102
Deckard™ 112
Northcott™ 120
Bronson™ 128
Saxton™ 136
Avalon™ 144
Arkitek™ 152
Weller™ 160
Parisa® 168

TUB & SHOWER

Extension Kits. 173
Multi-Handle Tub & Shower. 177
Showerheads, Handhelds,
& Components. 185
1/2” Thermostatic Shower System 213

Bath Accessories. 219

Single Control Vessel Faucets

Kenzo™
Single Control Vessel Lavatory

SHOWROOM PREFERRED

Model	Finish	Case Qty	List Price
LG4Ø-DF1C	Polished Chrome	3	$444
LG4Ø-DF1K	Brushed Nickel	3	$611
LG4Ø-DF1B	Matte Black	3	$620

Kenzo™
Single Control Vessel Lavatory Trough

SHOWROOM PREFERRED

Model	Finish	Case Qty	List Price
LG4Ø-DFØC	Polished Chrome	3	$468
LG4Ø-DFØK	Brushed Nickel	3	$636
LG4Ø-DFØB	Matte Black	3	$649

Ashfield™
Single Control Vessel Lavatory

SHOWROOM PREFERRED

Model	Finish	Case Qty	List Price
LG4Ø-YPØC	Polished Chrome	3	$453
LG4Ø-YPØK	Brushed Nickel	3	$516
LG4Ø-YPØY	Tuscan Bronze	3	$542
LG4Ø-YPØU	Rustic Bronze	3	$550

Arterra™
Single Control Vessel Lavatory

SHOWROOM PREFERRED

Model	Finish	Case Qty	List Price
LG4Ø-DEØC	Polished Chrome	3	$380
LG4Ø-DEØK	Brushed Nickel	3	$511
LG4Ø-DEØD	Polished Nickel	3	$511
LG4Ø-DEØY	Tuscan Bronze	3	$524

Contempra®
Single Control Vessel Lavatory

SHOWROOM PREFERRED

Model	Finish	Case Qty	List Price
LG4Ø-NCØØ	Polished Chrome	3	$389
LG4Ø-NKØØ	Brushed Nickel	3	$519
LG4Ø-NBØØ	Matte Black	3	$583
LG4Ø-NBGØØ	Brushed Gold	3	$706

Bath Reference

Single Control Lavatory Faucets

Rhen™
Single Control Lavatory

SHOWROOM PREFERRED

Model	Finish	Case Qty	List Price
LG42-RH1C	Polished Chrome	3	$378
LG42-RH1K	Brushed Nickel	3	$529
LG42-RH1B	Matte Black	3	$540
LG42-RH1BG	Brushed Gold	3	$552

Kenzo™
Single Control Lavatory

SHOWROOM PREFERRED

Model	Finish	Case Qty	List Price
LG42-DF1C	Polished Chrome	3	$364
LG42-DF1K	Brushed Nickel	3	$525
LG42-DF1B	Matte Black	3	$534

Kenzo™
Single Control Lavatory Trough

SHOWROOM PREFERRED

Model	Finish	Case Qty	List Price
LG42-DFØC	Polished Chrome	3	$393
LG42-DFØK	Brushed Nickel	3	$548
LG42-DFØB	Matte Black	3	$560

Ashfield™
Single Control Lavatory

SHOWROOM PREFERRED

Model	Finish	Case Qty	List Price
LG42-YPØC	Polished Chrome	3	$340
LG42-YPØK	Brushed Nickel	3	$439
LG42-YPØY	Tuscan Bronze	3	$483
LG42-YPØU	Rustic Bronze	3	$470

Arterra™
Single Control Lavatory

SHOWROOM PREFERRED

Model	Finish	Case Qty	List Price
LG42-DEØC	Polished Chrome	3	$297
LG42-DEØK	Brushed Nickel	3	$417
LG42-DEØD	Polished Nickel	3	$417
LG42-DEØY	Tuscan Bronze	3	$439

Contempra®
Single Control Lavatory

SHOWROOM PREFERRED

Model	Finish	Case Qty	List Price
LG42-NCØØ	Polished Chrome	3	$303
LG42-NKØØ	Brushed Nickel	3	$432
LG42-NBØØ	Matte Black	3	$456
LG42-NBGØØ	Brushed Gold	3	$552

CEC Compliant · Cal Green Compliant · Meets EPA WaterSense℠ Standards · NSF Lead-Free Certified · ADA Compliant · UltraSeal™ · SecurePfit™

Single Control Lavatory Faucets

Deckard™
Single Control Lavatory

Model	Finish	Case Qty	List Price
LG42-DAØC	Polished Chrome	3	$241
LG42-DAØK	Brushed Nickel	3	$320
LG42-DAØB	Matte Black	3	$374

Bronson™
Single Control Lavatory

Model	Finish	Case Qty	List Price
LG42-BSØC	Polished Chrome	3	$241
LG42-BSØK	Brushed Nickel	3	$320
LG42-BSØY	Tuscan Bronze	3	$374

Northcott™
Single Control Lavatory

Model	Finish	Case Qty	List Price
LG42-MGØC	Polished Chrome	3	$241
LG42-MGØK	Brushed Nickel	3	$320
LG42-MGØY	Tuscan Bronze	3	$374

Avalon™
Single Control Lavatory

Model	Finish	Case Qty	List Price
LG42-CB1C	Polished Chrome	3	$193
LG42-CB1K	Brushed Nickel	3	$229
LG42-CB1Y	Tuscan Bronze	3	$259

Arkitek™
Single Control Lavatory

Model	Finish	Case Qty	List Price
LG42-LPMC	Polished Chrome	3	$193
LG42-LPMK	Brushed Nickel	3	$229

Weller™
Single Control Lavatory

Model	Finish	Case Qty	List Price
LG42-WRØC	Polished Chrome	3	$158
LG42-WRØK	Brushed Nickel	3	$193
LG42-WRØY	Tuscan Bronze	3	$224

Parisa®
Single Control Lavatory

Model	Finish	Case Qty	List Price
LG42-AMCC	Polished Chrome	3	$161
LG42-AMCK	Brushed Nickel	3	$225
LG42-ANCC	Polished Chrome	3	$146

• ANCC = Less Drain Assembly

4" Centerset Lavatory Faucets

Marielle®
4" Centerset/Mini-Widespread Lavatory

SHOWROOM PREFERRED

Model	Finish	Case Qty	List Price
LG46-MØBC	Polished Chrome	3	$335
LG46-MØBK	Brushed Nickel	3	$448
LG46-MØBY	Tuscan Bronze	3	$481

Northcott™
4" Centerset Lavatory

Model	Finish	Case Qty	List Price
LG48-MGØC	Polished Chrome	3	$236
LG48-MGØK	Brushed Nickel	3	$315
LG48-MGØY	Tuscan Bronze	3	$361

Bronson™
4" Centerset Lavatory

Model	Finish	Case Qty	List Price
LG48-BSØC	Polished Chrome	3	$236
LG48-BSØK	Brushed Nickel	3	$315
LG48-BSØY	Tuscan Bronze	3	$361

Saxton™
4" Centerset Lavatory

Model	Finish	Case Qty	List Price
LG48-GLØC	Polished Chrome	3	$183
LG48-GLØK	Brushed Nickel	3	$218
LG48-GLØY	Tuscan Bronze	3	$248

CEC Compliant | Cal Green Compliant | Meets EPA WaterSense℠ Standards | NSF Lead-Free Certified | ADA Compliant | UltraSeal™ | SecurePfit™

Bath Reference

4" Centerset Lavatory Faucets

Avalon™
4" Centerset Lavatory

Model	Finish	Case Qty	List Price
LG48-CB1C	Polished Chrome	3	$183
LG48-CB1K	Brushed Nickel	3	$218
LG48-CB1Y	Tuscan Bronze	3	$248

Weller™
4" Centerset Lavatory

Model	Finish	Case Qty	List Price
LG48-WRØC	Polished Chrome	3	$141
LG48-WRØK	Brushed Nickel	3	$164
LG48-WRØY	Tuscan Bronze	3	$193

8" Wall Mount Lavatory Faucets

Bath Reference

Rhen™
8" Wall Mount Lavatory

SHOWROOM PREFERRED

Model	Finish	Case Qty	List Price
LG49-RH2C	Polished Chrome	3	$378
LG49-RH2K	Brushed Nickel	3	$598
LG49-RH2B	Matte Black	3	$604
LG49-RH2BG	Brushed Gold	3	$615

Kenzo™
8" Wall Mount Lavatory Trough

SHOWROOM PREFERRED

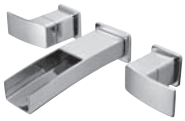

Model	Finish	Case Qty	List Price
LG49-DF1C	Polished Chrome	3	$393
LG49-DF1K	Brushed Nickel	3	$619
LG49-DF1B	Matte Black	3	$627

Kenzo™
8" Wall Mount Lavatory

SHOWROOM PREFERRED

Model	Finish	Case Qty	List Price
LG49-DF3C	Polished Chrome	3	$381
LG49-DF3K	Brushed Nickel	3	$601
LG49-DF3B	Matte Black	3	$612

CEC Compliant | Cal Green Compliant | Meets EPA WaterSense℠ Standards | NSF Lead-Free Certified | ADA Compliant | UltraSeal™ | SecurePfit™

8" Widespread Lavatory Faucets

	Model	Finish	Case Qty	List Price
Rhen™ 8" Widespread Lavatory SHOWROOM PREFERRED	LG49-RH1C	Polished Chrome	3	$505
	LG49-RH1K	Brushed Nickel	3	$719
	LG49-RH1B	Matte Black	3	$726
	LG49-RH1BG	Brushed Gold	3	$737

	Model	Finish	Case Qty	List Price
Contempra® 8" Widespread Lavatory SHOWROOM PREFERRED	LG49-NC1C	Polished Chrome	3	$385
	LG49-NC1K	Brushed Nickel	3	$448
	LG49-NC1B	Matte Black	3	$577
	LG49-NC1BG	Brushed Gold	3	$700

	Model	Finish	Case Qty	List Price
Kenzo™ 8" Widespread Lavatory SHOWROOM PREFERRED	LG49-DF2C	Polished Chrome	3	$501
	LG49-DF2K	Brushed Nickel	3	$719
	LG49-DF2B	Matte Black	3	$734

	Model	Finish	Case Qty	List Price
Deckard™ 8" Widespread Lavatory	LG49-DAØC	Polished Chrome	3	$323
	LG49-DAØK	Brushed Nickel	3	$381
	LG49-DAØB	Matte Black	3	$426

	Model	Finish	Case Qty	List Price
Kenzo™ 8" Widespread Lavatory Trough SHOWROOM PREFERRED	LG49-DFØC	Polished Chrome	3	$524
	LG49-DFØK	Brushed Nickel	3	$745
	LG49-DFØB	Matte Black	3	$752

	Model	Finish	Case Qty	List Price
Northcott™ 8" Widespread Lavatory	LG49-MGØC	Polished Chrome	3	$338
	LG49-MGØK	Brushed Nickel	3	$398
	LG49-MGØY	Tuscan Bronze	3	$445

	Model	Finish	Case Qty	List Price
Ashfield™ 8" Widespread Lavatory SHOWROOM PREFERRED	LG49-YP1C	Polished Chrome	3	$483
	LG49-YP1K	Brushed Nickel	3	$590
	LG49-YP1Y	Tuscan Bronze	3	$660
	LG49-YP1U	Rustic Bronze	3	$651

	Model	Finish	Case Qty	List Price
Bronson™ 8" Widespread Lavatory	LG49-BSØC	Polished Chrome	3	$338
	LG49-BSØK	Brushed Nickel	3	$398
	LG49-BSØY	Tuscan Bronze	3	$445

	Model	Finish	Case Qty	List Price
Arterra™ 8" Widespread Lavatory SHOWROOM PREFERRED	LG49-DEØC	Polished Chrome	3	$397
	LG49-DEØK	Brushed Nickel	3	$500
	LG49-DEØD	Polished Nickel	3	$500
	LG49-DEØY	Tuscan Bronze	3	$553

	Model	Finish	Case Qty	List Price
Saxton™ 8" Widespread Lavatory	LG49-GLØC	Polished Chrome	3	$278
	LG49-GLØK	Brushed Nickel	3	$301
	LG49-GLØY	Tuscan Bronze	3	$393

	Model	Finish	Case Qty	List Price
Marielle® 8" Widespread Lavatory SHOWROOM PREFERRED	LG49-MØBC	Polished Chrome	3	$458
	LG49-MØBK	Brushed Nickel	3	$591
	LG49-MØBY	Tuscan Bronze	3	$629

	Model	Finish	Case Qty	List Price
Avalon™ 8" Widespread Lavatory	LG49-CB1C	Polished Chrome	3	$278
	LG49-CB1K	Brushed Nickel	3	$301
	LG49-CB1Y	Tuscan Bronze	3	$393

CEC Compliant | Cal Green Compliant | Meets EPA WaterSense℠ Standards | NSF Lead-Free Certified | ADA Compliant | UltraSeal™ | SecurePfit™

Bath Reference

8" Widespread Lavatory Faucets

	Model	Finish	Case Qty	List Price
Arkitek™ 8" Widespread Lavatory	LG49-LPMC	Polished Chrome	3	$278
	LG49-LPMK	Brushed Nickel	3	$301

	Model	Finish	Case Qty	List Price
Weller™ 8" Widespread Lavatory	LG49-WRØC	Polished Chrome	3	$229
	LG49-WRØK	Brushed Nickel	3	$271
	LG49-WRØY	Tuscan Bronze	3	$331

Grid Strainers

	Model	Finish	Case Qty	List Price
With Overflow SHOWROOM PREFERRED	972-1Ø4A	Polished Chrome	6	$51
	972-1Ø4J	Brushed Nickel	6	$59
	972-1Ø4D	Polished Nickel	6	$59
	972-1Ø4B	Matte Black	6	$66
	972-1Ø4Y	Tuscan Bronze	6	$65
	972-1Ø4U	Rustic Bronze	6	$72
	972-1Ø4BG	Brushed Gold	6	$88

	Model	Finish	Case Qty	List Price
Without Overflow SHOWROOM PREFERRED	972-1Ø3A	Polished Chrome	6	$51
	972-1Ø3J	Brushed Nickel	6	$59
	972-1Ø3D	Polished Nickel	6	$59
	972-1Ø3B	Matte Black	6	$66
	972-1Ø3Y	Tuscan Bronze	6	$65
	972-1Ø3U	Rustic Bronze	6	$72
	972-1Ø3BG	Brushed Gold	6	$88

Pop-Up Assemblies

	Model	Finish	Case Qty	List Price
All Metal Pop-Up	972-Ø22A	Polished Chrome	1	$44
	972-Ø22J	Brushed Nickel	1	$48
	972-Ø22B	Matte Black	1	$67
	972-Ø22Y	Tuscan Bronze	1	$53
	972-Ø22U	Rustic Bronze	1	$55
	972-Ø22BG	Brushed Gold	1	$53

	Model	Finish	Case Qty	List Price
Push & Seal™	972-Ø97A	Polished Chrome	1	$20
	972-Ø97J	Brushed Nickel	1	$26.40
	972-Ø97B	Matte Black	1	$42.20
	972-Ø97Y	Tuscan Bronze	1	$33.80

All Metal Push & Seal™	972-101A	Polished Chrome	1	$66
	972-101J	Brushed Nickel	1	$72
	972-101B	Matte Black	1	$71.70
	972-101Y	Tuscan Bronze	1	$65.40
	972-101BG	Brushed Gold	1	$83

CEC Compliant | Cal Green Compliant | Meets EPA WaterSense℠ Standards | NSF Lead-Free Certified | ADA Compliant | UltraSeal™ | SecurePfit™

1-Hole Roman Tub Trim

Deckard™
1-Hole Roman Tub

Model	Finish	Case Qty	List Price
RT6-1DAC	Polished Chrome	3	$541
RT6-1DAK	Brushed Nickel	3	$661
RT6-1DAB	Matte Black	3	$782

2-Hole Roman Tub Trim

Deckard™
2-Hole Roman Tub

Model	Finish	Case Qty	List Price
RT6-2DAC	Polished Chrome	3	$661
RT6-2DAK	Brushed Nickel	3	$782
RT6-2DAB	Matte Black	3	$842

Hand Shower 1.8 gpm @ 80 psi

3-Hole Roman Tub Trims

Rhen™
3-Hole Roman Tub

SHOWROOM PREFERRED

Model	Finish	Case Qty	List Price
RT6-5RHC	Polished Chrome	3	$604
RT6-5RHK	Brushed Nickel	3	$784
RT6-5RHB	Matte Black	3	$795
RT6-5RHBG	Brushed Gold	3	$813

Ashfield™
3-Hole Roman Tub

SHOWROOM PREFERRED

Model	Finish	Case Qty	List Price
RT6-5YPC	Polished Chrome	3	$685
RT6-5YPK	Brushed Nickel	3	$901
RT6-5YPY	Tuscan Bronze	3	$955
RT6-5YPU	Rustic Bronze	3	$946

Kenzo™
3-Hole Roman Tub

SHOWROOM PREFERRED

Model	Finish	Case Qty	List Price
RT6-5D1C	Polished Chrome	3	$608
RT6-5D1K	Brushed Nickel	3	$799
RT6-5D1B	Matte Black	3	$814

Arterra™
3-Hole Roman Tub

SHOWROOM PREFERRED

Model	Finish	Case Qty	List Price
RT6-5DEC	Polished Chrome	3	$457
RT6-5DEK	Brushed Nickel	3	$564
RT6-5DED	Polished Nickel	3	$564
RT6-5DEY	Tuscan Bronze	3	$612

Kenzo™
3-Hole Roman Tub Trough

SHOWROOM PREFERRED

Model	Finish	Case Qty	List Price
RT6-5DFC	Polished Chrome	3	$634
RT6-5DFK	Brushed Nickel	3	$821
RT6-5DFB	Matte Black	3	$833

Marielle®
3-Hole Roman Tub

SHOWROOM PREFERRED

Model	Finish	Case Qty	List Price
RT6-5MXC	Polished Chrome	3	$399
RT6-5MXK	Brushed Nickel	3	$594
RT6-5MXY	Tuscan Bronze	3	$672

CEC Compliant | Cal Green Compliant | Meets EPA WaterSense℠ Standards | NSF Lead-Free Certified | ADA Compliant | UltraSeal™ | SecurePfit™

Bath Reference

3-Hole Roman Tub Trims

Contempra®
3-Hole Roman Tub

SHOWROOM PREFERRED

Model	Finish	Case Qty	List Price
RT6-5NCC	Polished Chrome	3	$401
RT6-5NCK	Brushed Nickel	3	$575
RT6-5NCB	Matte Black	3	$601
RT6-5NCBG	Brushed Gold	3	$718

Deckard™
3-Hole Roman Tub

Model	Finish	Case Qty	List Price
RT6-5DAC	Polished Chrome	3	$356
RT6-5DAK	Brushed Nickel	3	$470
RT6-5DAB	Matte Black	3	$505

Northcott™
3-Hole Roman Tub

Model	Finish	Case Qty	List Price
RT6-5MGC	Polished Chrome	3	$356
RT6-5MGK	Brushed Nickel	3	$470
RT6-5MGY	Tuscan Bronze	3	$505

Bronson™
3-Hole Roman Tub

Model	Finish	Case Qty	List Price
RT6-5BSC	Polished Chrome	3	$360
RT6-5BSK	Brushed Nickel	3	$475
RT6-5BSY	Tuscan Bronze	3	$512

Saxton™
3-Hole Roman Tub

Model	Finish	Case Qty	List Price
RT6-5GLC	Polished Chrome	3	$251
RT6-5GLK	Brushed Nickel	3	$305
RT6-5GLY	Tuscan Bronze	3	$397

Avalon™
3-Hole Roman Tub

Model	Finish	Case Qty	List Price
RT6-5CB1C	Polished Chrome	3	$251
RT6-5CB1K	Brushed Nickel	3	$305
RT6-5CB1Y	Tuscan Bronze	3	$397

Arkitek™
3-Hole Roman Tub

Model	Finish	Case Qty	List Price
RT6-5LPMC	Polished Chrome	3	$248
RT6-5LPMK	Brushed Nickel	3	$301

Weller™
3-Hole Roman Tub

Model	Finish	Case Qty	List Price
RT6-5WRC	Polished Chrome	3	$218
RT6-5WRK	Brushed Nickel	3	$259
RT6-5WRY	Tuscan Bronze	3	$320

Bath Reference

Handle Kits

HHL - Roman Tub Handles (Sold in Pairs)

Ashfield™

SHOWROOM PREFERRED

Model	Finish	Case Qty	List Price
HHL-YPLC	Polished Chrome	16	$92
HHL-YPLK	Brushed Nickel	16	$114
HHL-YPLY	Tuscan Bronze	16	$136
HHL-YPLU	Rustic Bronze	16	$127

Marielle®

SHOWROOM PREFERRED

Model	Finish	Case Qty	List Price
HHL-MØBC	Polished Chrome	16	$77
HHL-MØBK	Brushed Nickel	16	$116
HHL-MØBY	Tuscan Bronze	16	$135

CEC Compliant · Cal Green Compliant · Meets EPA WaterSense℠ Standards · NSF Lead-Free Certified · ADA Compliant · UltraSeal™ · SecurePfit™

Rhen™
4-Hole Roman Tub Trim with Hand Shower

SHOWROOM PREFERRED

Model	Finish	Case Qty	List Price
LG6-4RHC	Polished Chrome	3	$685
LG6-4RHK	Brushed Nickel	3	$987
LG6-4RHB	Matte Black	3	$1,004
LG6-4RHBG	Brushed Gold	3	$1,309

Hand Shower 1.8 gpm @ 80 psi

Kenzo™
4-Hole Roman Tub with Hand Shower

SHOWROOM PREFERRED

Model	Finish	Case Qty	List Price
LG6-4D1C	Polished Chrome	3	$685
LG6-4D1K	Brushed Nickel	3	$1,006
LG6-4D1B	Matte Black	3	$1,024

Hand Shower 1.8 gpm @ 80 psi

Kenzo™
4-Hole Roman Tub Trough with Hand Shower

SHOWROOM PREFERRED

Model	Finish	Case Qty	List Price
LG6-4DFC	Polished Chrome	3	$710
LG6-4DFK	Brushed Nickel	3	$1,021
LG6-4DFB	Matte Black	3	$1,040

Hand Shower 1.8 gpm @ 80 psi

Saxton™
4-Hole Roman Tub Trim with Hand Shower

SHOWROOM PREFERRED

Model	Finish	Case Qty	List Price
LG6-4GLC	Polished Chrome	3	$512
LG6-4GLK	Brushed Nickel	3	$652
LG6-4GLY	Tuscan Bronze	3	$730

Hand Shower 1.8 gpm @ 80 psi

Rhen™
Single Hole
Free-Standing Tub Filler
with Hand Shower

SHOWROOM PREFERRED

Model	Finish	Case Qty	List Price
LG6-1RHC	Polished Chrome	1	$1,756
LG6-1RHK	Brushed Nickel	1	$1,911
LG6-1RHB	Matte Black	1	$2,062
LG6-1RHBG	Brushed Gold	1	$2,232

Hand Shower 1.8 gpm @ 80 psi

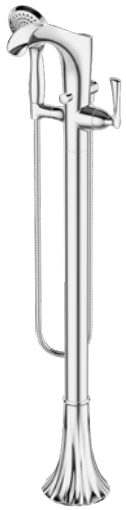

Modern Single Hole
Free-Standing Tub Filler
with Hand Shower

SHOWROOM PREFERRED

Model	Finish	Case Qty	List Price
LG6-1MFC	Polished Chrome	1	$960
LG6-1MFK	Brushed Nickel	1	$1,173
LG6-1MFD	Polished Nickel	1	$1,173
LG6-1MFB	Matte Black	1	$1,276
LG6-1MFY	Tuscan Bronze	1	$1,261
LG6-1MFBG	Brushed Gold	1	$1,319

Hand Shower 1.8 gpm @ 80 psi

Traditional Double Riser
Free-Standing Tub Filler
with Hand Shower

SHOWROOM PREFERRED

LG6-1TFC	Polished Chrome	1	$1,200
LG6-1TFK	Brushed Nickel	1	$1,382
LG6-1TFD	Polished Nickel	1	$1,382
LG6-1TFY	Tuscan Bronze	1	$1,622

Hand Shower 1.8 gpm @ 80 psi

Tub Filler Extension Kit

91Ø-Ø62A	Polished Chrome	1	$135
91Ø-Ø62J	Brushed Nickel	1	$160
91Ø-Ø62D	Polished Nickel	1	$160
91Ø-Ø62Y	Tuscan Bronze	1	$180

Traditional Tub Filler
Riser Support Kit

931-134A	Polished Chrome	1	$105.50
931-134J	Brushed Nickel	1	$131.90
931-134D	Polished Nickel	1	$131.90
931-134Y	Tuscan Bronze	1	$158.30

CEC Compliant · Cal Green Compliant · Meets EPA WaterSense℠ Standards · NSF Lead-Free Certified · ADA Compliant · UltraSeal™ · SecurePfit™

Rhen™
Pressure Balance Tub & Shower Trim

SHOWROOM PREFERRED

Model	Finish	Case Qty	List Price
LG89-8RHC	Polished Chrome	3	$436
LG89-8RHK	Brushed Nickel	3	$546
LG89-8RHB	Matte Black	3	$610
LG89-8RHG	Brushed Gold	3	$633

Showerhead 1.8 gpm @ 80 psi

Contempra®
Pressure Balance Tub & Shower Trim

SHOWROOM PREFERRED

Model	Finish	Case Qty	List Price
LG89-8NCC	Polished Chrome	3	$296
LG89-8NCK	Brushed Nickel	3	$434
LG89-8NCB	Matte Black	3	$443
LG89-8NCBG	Brushed Gold	3	$535

Showerhead 1.8 gpm @ 80 psi

Kenzo™
Pressure Balance Tub & Shower Trim

SHOWROOM PREFERRED

Model	Finish	Case Qty	List Price
LG89-8DFC	Polished Chrome	3	$375
LG89-8DFK	Brushed Nickel	3	$581
LG89-8DFB	Matte Black	3	$592

Showerhead 1.8 gpm @ 80 psi

Deckard™
Pressure Balance Tub & Shower Trim

Model	Finish	Case Qty	List Price
LG89-8DAC	Polished Chrome	3	$205
LG89-8DAK	Brushed Nickel	3	$290
LG89-8DAB	Matte Black	3	$331

Showerhead 1.8 gpm @ 80 psi

Ashfield™
Pressure Balance Tub & Shower Trim

SHOWROOM PREFERRED

Model	Finish	Case Qty	List Price
LG89-8YPC	Polished Chrome	3	$273
LG89-8YPK	Brushed Nickel	3	$487
LG89-8YPY	Tuscan Bronze	3	$609
LG89-8YPU	Rustic Bronze	3	$602

Showerhead 1.8 gpm @ 80 psi

Northcott™
Pressure Balance Tub & Shower Trim

Model	Finish	Case Qty	List Price
LG89-8MGC	Polished Chrome	3	$205
LG89-8MGK	Brushed Nickel	3	$290
LG89-8MGY	Tuscan Bronze	3	$331

Showerhead 1.8 gpm @ 80 psi

Arterra™
Pressure Balance Tub & Shower Trim

SHOWROOM PREFERRED

Model	Finish	Case Qty	List Price
LG89-8DEC	Polished Chrome	3	$380
LG89-8DEK	Brushed Nickel	3	$470
LG89-8DED	Polished Nickel	3	$470
LG89-8DEY	Tuscan Bronze	3	$530

Showerhead 1.8 gpm @ 80 psi

Bronson™
Pressure Balance Tub & Shower Trim

Model	Finish	Case Qty	List Price
LG89-8BSC	Polished Chrome	3	$205
LG89-8BSK	Brushed Nickel	3	$290
LG89-8BSY	Tuscan Bronze	3	$331

Showerhead 1.8 gpm @ 80 psi

Marielle®
Pressure Balance Tub & Shower Trim

SHOWROOM PREFERRED

Model	Finish	Case Qty	List Price
LG89-8MBC	Polished Chrome	3	$240
LG89-8MBK	Brushed Nickel	3	$405
LG89-8MBY	Tuscan Bronze	3	$437

Showerhead 1.8 gpm @ 80 psi

Saxton™
Pressure Balance Tub & Shower Trim

Model	Finish	Case Qty	List Price
LG89-8GL1C	Polished Chrome	3	$124
LG89-8GL1K	Brushed Nickel	3	$271
LG89-8GL1Y	Tuscan Bronze	3	$311

Showerhead 1.8 gpm @ 80 psi

CEC Compliant | Cal Green Compliant | Meets EPA WaterSense℠ Standards | NSF Lead-Free Certified | ADA Compliant | UltraSeal™ | SecurePfit™

Bath Reference

Avalon™
Pressure Balance Tub & Shower Trim

Model	Finish	Case Qty	List Price
LG89-8CBC	Polished Chrome	3	$122
LG89-8CBK	Brushed Nickel	3	$268
LG89-8CBY	Tuscan Bronze	3	$307

Showerhead 1.8 gpm @ 80 psi

Weller™
Pressure Balance Tub & Shower Trim

Model	Finish	Case Qty	List Price
LG89-8WRC	Polished Chrome	3	$103
LG89-8WRK	Brushed Nickel	3	$175
LG89-8WRY	Tuscan Bronze	3	$212

Showerhead 1.8 gpm @ 80 psi

Arkitek™
Pressure Balance Tub & Shower Trim

Model	Finish	Case Qty	List Price
LG89-8LPMC	Polished Chrome	3	$122
LG89-8LPMK	Brushed Nickel	3	$268

Showerhead 1.8 gpm @ 80 psi

CEC Compliant
Cal Green Compliant
Meets EPA WaterSense℠ Standards
NSF Lead-Free Certified
ADA Compliant
UltraSeal™
SecurePfit™

Rhen™
Pressure Balance Shower Trim

SHOWROOM PREFERRED

Model	Finish	Case Qty	List Price
LG89-7RHC	Polished Chrome	3	$361
LG89-7RHK	Brushed Nickel	3	$450
LG89-7RHB	Matte Black	3	$505
LG89-7RHBG	Brushed Gold	3	$523

Showerhead 1.8 gpm @ 80 psi

Contempra®
Pressure Balance Shower Trim

SHOWROOM PREFERRED

Model	Finish	Case Qty	List Price
LG89-7NCC	Polished Chrome	3	$212
LG89-7NCK	Brushed Nickel	3	$315
LG89-7NCB	Matte Black	3	$318
LG89-7NCBG	Brushed Gold	3	$383

Showerhead 1.8 gpm @ 80 psi

Kenzo™
Pressure Balance Shower Trim

SHOWROOM PREFERRED

Model	Finish	Case Qty	List Price
LG89-7DFC	Polished Chrome	3	$280
LG89-7DFK	Brushed Nickel	3	$458
LG89-7DFB	Matte Black	3	$465

Showerhead 1.8 gpm @ 80 psi

Deckard™
Pressure Balance Shower Trim

Model	Finish	Case Qty	List Price
LG89-7DAC	Polished Chrome	3	$169
LG89-7DAK	Brushed Nickel	3	$253
LG89-7DAB	Matte Black	3	$296

Showerhead 1.8 gpm @ 80 psi

Ashfield™
Pressure Balance Shower Trim

SHOWROOM PREFERRED

Model	Finish	Case Qty	List Price
LG89-7YPC	Polished Chrome	3	$214
LG89-7YPK	Brushed Nickel	3	$340
LG89-7YPY	Tuscan Bronze	3	$500
LG89-7YPU	Rustic Bronze	3	$562

Showerhead 1.8 gpm @ 80 psi

Northcott™
Pressure Balance Shower Trim

Model	Finish	Case Qty	List Price
LG89-7MGC	Polished Chrome	3	$169
LG89-7MGK	Brushed Nickel	3	$253
LG89-7MGY	Tuscan Bronze	3	$296

Showerhead 1.8 gpm @ 80 psi

Arterra™
Pressure Balance Shower Trim

SHOWROOM PREFERRED

Model	Finish	Case Qty	List Price
LG89-7DEC	Polished Chrome	3	$296
LG89-7DEK	Brushed Nickel	3	$380
LG89-7DED	Polished Nickel	3	$380
LG89-7DEY	Tuscan Bronze	3	$452

Showerhead 1.8 gpm @ 80 psi

Bronson™
Pressure Balance Shower Trim

Model	Finish	Case Qty	List Price
LG89-7BSC	Polished Chrome	3	$169
LG89-7BSK	Brushed Nickel	3	$253
LG89-7BSY	Tuscan Bronze	3	$296

Showerhead 1.8 gpm @ 80 psi

Marielle®
Pressure Balance Shower Trim

SHOWROOM PREFERRED

Model	Finish	Case Qty	List Price
LG89-7MBC	Polished Chrome	3	$168
LG89-7MBK	Brushed Nickel	3	$355
LG89-7MBY	Tuscan Bronze	3	$376

Showerhead 1.8 gpm @ 80 psi

Saxton™
Pressure Balance Shower Trim

Model	Finish	Case Qty	List Price
LG89-7GL1C	Polished Chrome	3	$92
LG89-7GL1K	Brushed Nickel	3	$238
LG89-7GL1Y	Tuscan Bronze	3	$282

Showerhead 1.8 gpm @ 80 psi

Bath Reference

CEC Compliant | Cal Green Compliant | Meets EPA WaterSense℠ Standards | NSF Lead-Free Certified | ADA Compliant | UltraSeal™ | SecurePfit™

Pressure Balance Shower Trim

Avalon™
Pressure Balance Shower Trim

Model	Finish	Case Qty	List Price
LG89-7CBC	Polished Chrome	3	$91
LG89-7CBK	Brushed Nickel	3	$236
LG89-7CBY	Tuscan Bronze	3	$279

Showerhead 1.8 gpm @ 80 psi

Weller™
Pressure Balance Shower Trim

Model	Finish	Case Qty	List Price
LG89-7WRC	Polished Chrome	3	$81
LG89-7WRK	Brushed Nickel	3	$141
LG89-7WRY	Tuscan Bronze	3	$169

Showerhead 1.8 gpm @ 80 psi

Arkitek™
Pressure Balance Shower Trim

Model	Finish	Case Qty	List Price
LG89-7LPMC	Polished Chrome	3	$91
LG89-7LPMK	Brushed Nickel	3	$236

Showerhead 1.8 gpm @ 80 psi

Bath Reference

1/2" Thermostatic Tub & Shower Trim

1/2" Thermostatic Tub & Shower Trim

SHOWROOM PREFERRED

Model	Finish	Case Qty	List Price
LG89-8TUC	Polished Chrome	3	$331
LG89-8TUK	Brushed Nickel	3	$393
LG89-8TUY	Tuscan Bronze	3	$452

1/2" Thermostatic Shower Trim

SHOWROOM PREFERRED

Model	Finish	Case Qty	List Price
LG89-7TUC	Polished Chrome	3	$237
LG89-7TUK	Brushed Nickel	3	$331
LG89-7TUY	Tuscan Bronze	3	$434

1/2" Thermostatic Valve Only Trim

1/2" Thermostatic Valve Only Trim

SHOWROOM PREFERRED

Model	Finish	Case Qty	List Price
R89-1TUC	Polished Chrome	3	$201
R89-1TUK	Brushed Nickel	3	$242
R89-1TUY	Tuscan Bronze	3	$262

CEC Compliant | Cal Green Compliant | Meets EPA WaterSense℠ Standards | NSF Lead-Free Certified | ADA Compliant | UltraSeal™ | SecurePfit™

Rhen™
Pressure Balance Valve Only Trim

SHOWROOM PREFERRED

Model	Finish	Case Qty	List Price
R89-1RHC	Polished Chrome	3	$204
R89-1RHK	Brushed Nickel	3	$262
R89-1RHB	Matte Black	3	$279
R89-1RHBG	Brushed Gold	3	$291

Kenzo™
Pressure Balance Valve Only Trim

SHOWROOM PREFERRED

Model	Finish	Case Qty	List Price
R89-1DFC	Polished Chrome	3	$168
R89-1DFK	Brushed Nickel	3	$272
R89-1DFB	Matte Black	3	$277

Ashfield™
Pressure Balance Valve Only Trim

SHOWROOM PREFERRED

Model	Finish	Case Qty	List Price
R89-1YPC	Chrome	3	$129
R89-1YPK	Brushed Nickel	3	$227
R89-1YPY	Tuscan Bronze	3	$298
R89-1YPU	Rustic Bronze	3	$334

Arterra™
Pressure Balance Valve Only Trim

SHOWROOM PREFERRED

Model	Finish	Case Qty	List Price
R89-1DEC	Polished Chrome	3	$167
R89-1DEK	Brushed Nickel	3	$218
R89-1DED	Polished Nickel	3	$218
R89-1DEY	Tuscan Bronze	3	$253

Marielle®
Pressure Balance Valve Only Trim

SHOWROOM PREFERRED

Model	Finish	Case Qty	List Price
R89-1MBC	Polished Chrome	3	$112
R89-1MBK	Brushed Nickel	3	$208
R89-1MBY	Tuscan Bronze	3	$246

Contempra®
Pressure Balance Valve Only Trim

SHOWROOM PREFERRED

Model	Finish	Case Qty	List Price
R89-1NCC	Polished Chrome	3	$111
R89-1NCK	Brushed Nickel	3	$171
R89-1NCB	Matte Black	3	$175
R89-1NCBG	Brushed Gold	3	$198

Deckard™
Pressure Balance Valve Only Trim

Model	Finish	Case Qty	List Price
R89-1DAC	Polished Chrome	3	$91
R89-1DAK	Brushed Nickel	3	$122
R89-1DAB	Matte Black	3	$164

Northcott™
Pressure Balance Valve Only Trim

Model	Finish	Case Qty	List Price
R89-1MGC	Polished Chrome	3	$91
R89-1MGK	Brushed Nickel	3	$122
R89-1MGY	Tuscan Bronze	3	$164

Bronson™
Pressure Balance Valve Only Trim

Model	Finish	Case Qty	List Price
R89-1BSC	Polished Chrome	3	$91
R89-1BSK	Brushed Nickel	3	$122
R89-1BSY	Tuscan Bronze	3	$164

Saxton™
Pressure Balance Valve Only Trim

Model	Finish	Case Qty	List Price
R89-1GL1C	Polished Chrome	3	$73
R89-1GL1K	Brushed Nickel	3	$166
R89-1GL1Y	Tuscan Bronze	3	$198

Avalon™
Pressure Balance Valve Only Trim

Model	Finish	Case Qty	List Price
R89-1CBC	Polished Chrome	3	$60
R89-1CBK	Brushed Nickel	3	$133
R89-1CBY	Tuscan Bronze	3	$164

Arkitek™
Pressure Balance Valve Only Trim

Model	Finish	Case Qty	List Price
R89-1LPMC	Polished Chrome	3	$73
R89-1LPMK	Brushed Nickel	3	$97

Weller™
Pressure Balance Valve Only Trim

Model	Finish	Case Qty	List Price
R89-1WRC	Polished Chrome	3	$56
R89-1WRK	Brushed Nickel	3	$91
R89-1WRY	Tuscan Bronze	3	$122

Bath Reference

CEC Compliant | Cal Green Compliant | Meets EPA WaterSense℠ Standards | NSF Lead-Free Certified | ADA Compliant | UltraSeal™ | SecurePfit™

Rhen™
Slide Bar/
Hand Shower Kit

SHOWROOM PREFERRED

Model	Finish	Case Qty	List Price
LG16-3RHC	Polished Chrome	3	$378
LG16-3RHK	Brushed Nickel	3	$500
LG16-3RHB	Matte Black	3	$583
LG16-3RHBG	Brushed Gold	3	$609

Hand Shower 1.8 gpm @ 80 psi

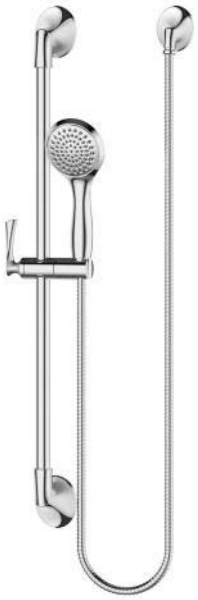

Kenzo™
Slide Bar/
Hand Shower Kit

SHOWROOM PREFERRED

Model	Finish	Case Qty	List Price
LG16-3DFC	Polished Chrome	3	$384
LG16-3DFK	Brushed Nickel	3	$511
LG16-3DFB	Matte Black	3	$595

Hand Shower 1.8 gpm @ 80 psi

Arterra™
Slide Bar/
Hand Shower Kit

SHOWROOM PREFERRED

LG16-3DEC	Polished Chrome	3	$356
LG16-3DEK	Brushed Nickel	3	$475
LG16-3DED	Polished Nickel	3	$475
LG16-3DEY	Tuscan Bronze	3	$560

Hand Shower 1.8 gpm @ 80 psi

Slide Bar Package

SHOWROOM PREFERRED

LG16-3ØØC	Polished Chrome	6	$240
LG16-3ØØK	Brushed Nickel	6	$407
LG16-3ØØB	Matte Black	6	$496
LG16-3ØØY	Tuscan Bronze	6	$516
LG16-3ØØU	Rustic Bronze	6	$600
LG16-3ØØBG	Brushed Gold	6	$551

CEC Compliant | Cal Green Compliant | Meets EPA WaterSense℠ Standards | NSF Lead-Free Certified | ADA Compliant | UltraSeal™ | SecurePfit™

Rhen™

SHOWROOM PREFERRED

Model	Finish	Case Qty	List Price
Ø16-RH1C	Polished Chrome	3	$123
Ø16-RH1K	Brushed Nickel	3	$169
Ø16-RH1B	Matte Black	3	$189
Ø16-RH1BG	Brushed Gold	3	$204

Kenzo™

SHOWROOM PREFERRED

Model	Finish	Case Qty	List Price
Ø16-DFØC	Polished Chrome	3	$121
Ø16-DFØK	Brushed Nickel	3	$167
Ø16-DFØB	Matte Black	3	$170

Ashfield™

SHOWROOM PREFERRED

Model	Finish	Case Qty	List Price
Ø16-YPØC	Polished Chrome	3	$104
Ø16-YPØK	Brushed Nickel	3	$149
Ø16-YPØY	Tuscan Bronze	3	$219
Ø16-YPØU	Rustic Bronze	3	$228

Arterra™

SHOWROOM PREFERRED

Model	Finish	Case Qty	List Price
Ø16-DE1C	Polished Chrome	3	$126
Ø16-DE1K	Brushed Nickel	3	$148
Ø16-DE1D	Polished Nickel	3	$148
Ø16-DE1Y	Tuscan Bronze	3	$171

Marielle®

SHOWROOM PREFERRED

Model	Finish	Case Qty	List Price
Ø16-MBØC	Polished Chrome	3	$103
Ø16-MBØK	Brushed Nickel	3	$144
Ø16-MBØY	Tuscan Bronze	3	$212

Contempra®

SHOWROOM PREFERRED

Model	Finish	Case Qty	List Price
Ø16-NC1C	Polished Chrome	3	$95
Ø16-NC1K	Brushed Nickel	3	$126
Ø16-NC1B	Matte Black	3	$143
Ø16-NC1BG	Brushed Gold	3	$171

Deckard™

Model	Finish	Case Qty	List Price
Ø16-DAØC	Polished Chrome	3	$86
Ø16-DAØK	Brushed Nickel	3	$103
Ø16-DAØB	Matte Black	3	$146

Northcott™

Model	Finish	Case Qty	List Price
Ø16-MGØC	Polished Chrome	3	$86
Ø16-MGØK	Brushed Nickel	3	$103
Ø16-MGØY	Tuscan Bronze	3	$146

Bronson™

Model	Finish	Case Qty	List Price
Ø16-BSØC	Polished Chrome	3	$86
Ø16-BSØK	Brushed Nickel	3	$103
Ø16-BSØY	Tuscan Bronze	3	$146

Saxton™

Model	Finish	Case Qty	List Price
Ø16-GL1C	Polished Chrome	3	$66
Ø16-GL1K	Brushed Nickel	3	$91
Ø16-GL1Y	Tuscan Bronze	3	$122

Avalon™

Model	Finish	Case Qty	List Price
Ø16-CB1C	Polished Chrome	3	$73
Ø16-CB1K	Brushed Nickel	3	$103
Ø16-CB1Y	Tuscan Bronze	3	$135

CEC Compliant | Cal Green Compliant | Meets EPA WaterSense℠ Standards | NSF Lead-Free Certified | ADA Compliant | UltraSeal™ | SecurePfit™

Free-Standing Tub Filler

Escape to your happy place. Allow the clean lines and high end modernity to transport you to your own personal spa experience. Utilize the cleanliness and simplicity to enter into a space of calm and tranquility.

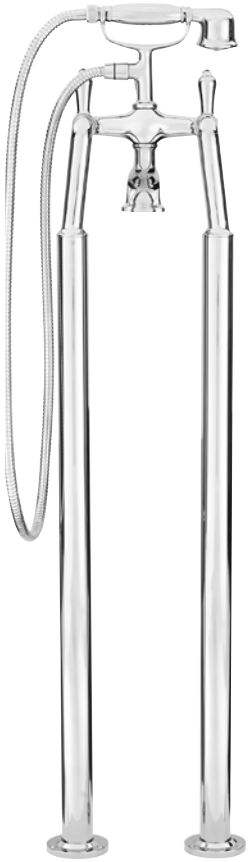

Rhen™
Single Hole Free-Standing Tub Filler with Hand Shower

Model	Finish	Case Qty	List Price
LG6-1RHC	Polished Chrome	1	$1,756
LG6-1RHK	Brushed Nickel	1	$1,911
LG6-1RHB	Matte Black	1	$2,062
LG6-1RHBG	Brushed Gold	1	$2,232

Technical Info

Holes: · 1-Hole Installation

Features:
- Elegant, Transitional Design
- Ceramic Disc Valve
- Metal Lever Handle
- 8 gpm @ 60 psi
- Hand Shower 1.8 gpm @ 80 psi

Must Order Free-Standing Rough In Valve Separately.
See Valve Section.

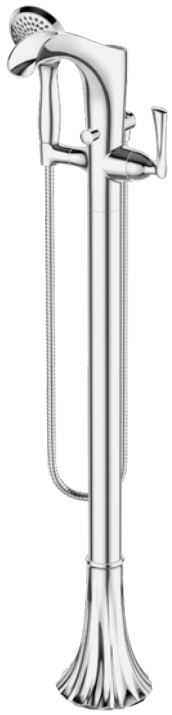

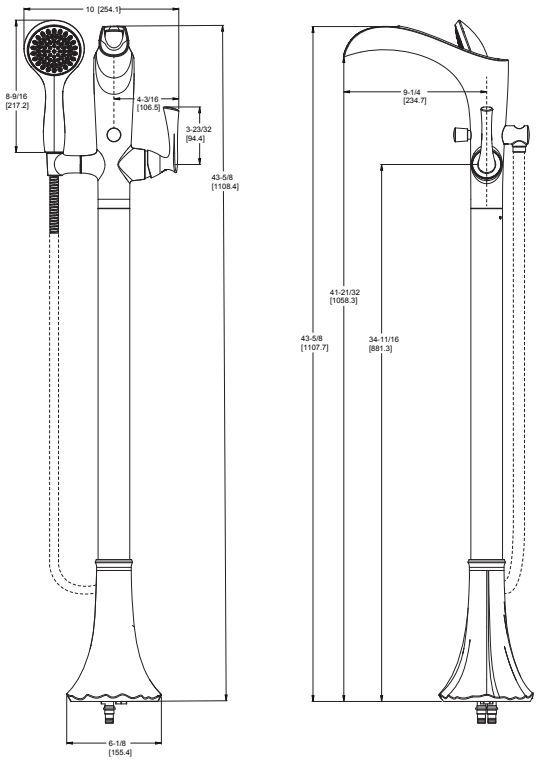

SHOWROOM PREFERRED

Modern Single Hole Free-Standing Tub Filler with Hand Shower

Model	Finish	Case Qty	List Price
LG6-1MFC	Polished Chrome	1	$960
LG6-1MFK	Brushed Nickel	1	$1,173
LG6-1MFD	Polished Nickel	1	$1,173
LG6-1MFB	Matte Black	1	$1,276
LG6-1MFY	Tuscan Bronze	1	$1,261
LG6-1MFBG	Brushed Gold	1	$1,319

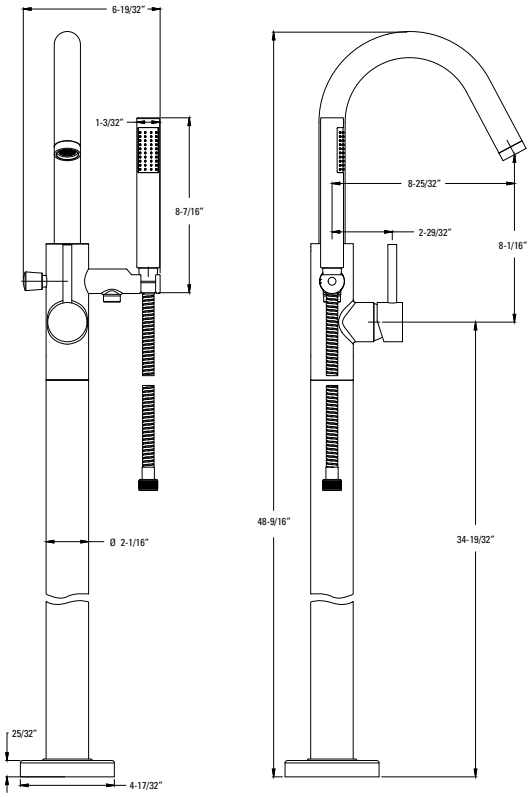

Technical Info

Holes: · 1-Hole Installation

Features:
- Sleek, Modern Design
- Ceramic Disc Valve
- Metal Lever Handle
- 8 gpm @ 60 psi
- Hand Shower 1.8 gpm @ 80 psi

Must Order Free-Standing Rough In Valve Separately.
See Valve Section.

CEC Compliant | Cal Green Compliant | Meets EPA WaterSense℠ Standards | NSF Lead-Free Certified | ADA Compliant | UltraSeal™ | SecurePfit™

Free-Standing Tub Fillers

Traditional Double Riser Free-Standing Tub Filler with Hand Shower

Model	Finish	Case Qty	List Price
LG6-1TFC	Polished Chrome	1	$1,200
LG6-1TFK	Brushed Nickel	1	$1,382
LG6-1TFD	Polished Nickel	1	$1,382
LG6-1TFY	Tuscan Bronze	1	$1,622

Technical Info

Holes: · 2-Hole Installation

Features:
- Traditional Double Riser Tub Filler
- Ceramic Disc Valves
- Metal Lever Handles
- Both Finish Matched Metal and White Ceramic Hot and Cold Inserts Included
- 3/4" to 1/2" Adaptor Included
- 9 gpm @ 45 psi
- Hand Shower 1.8 gpm @ 80 psi

No Additional Valving Needed.

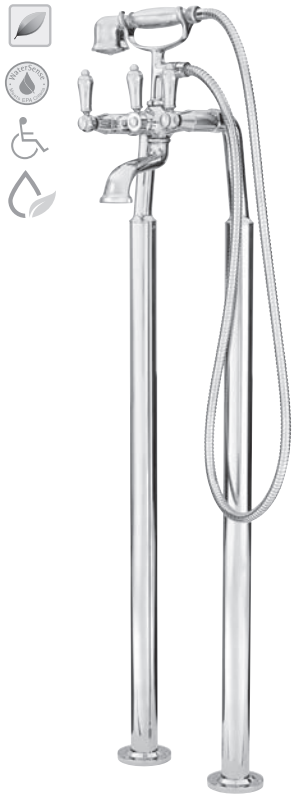

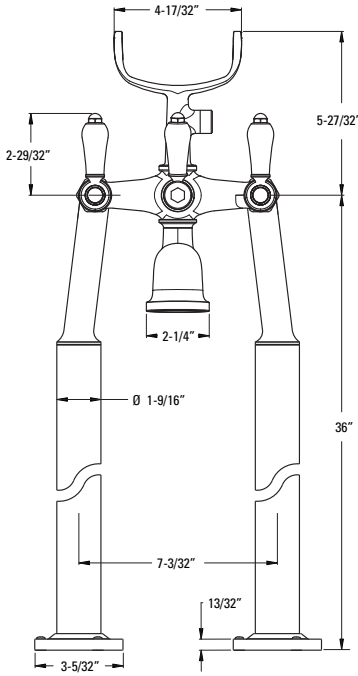

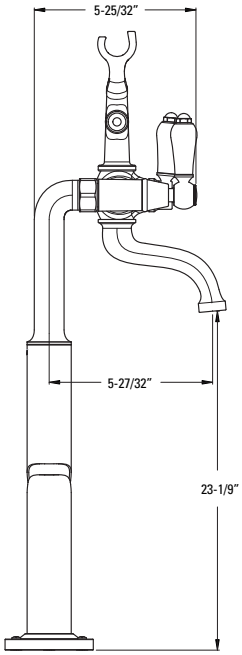

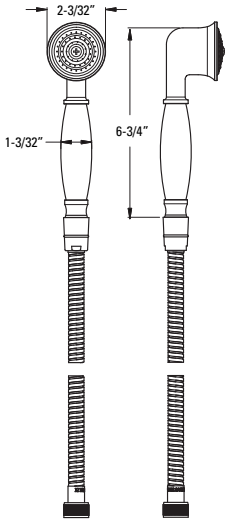

Tub Filler Extension Kit

91Ø-Ø62A	Polished Chrome	1	$135
91Ø-Ø62J	Brushed Nickel	1	$160
91Ø-Ø62D	Polished Nickel	1	$160
91Ø-Ø62Y	Tuscan Bronze	1	$180

Features:
- 4" Extension
- All Metal Construction
- To Be Used with Traditional Double Riser Free-Standing Tub Filler with Hand Shower LG6-1TF*

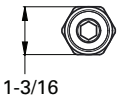

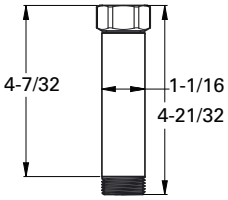

Tub Filler Riser Support Kit

931-134A	Polished Chrome	1	$106
931-134J	Brushed Nickel	1	$132
931-134D	Polished Nickel	1	$132
931-134Y	Tuscan Bronze	1	$158

Features:
- Easy Install on Traditional Double Riser Tub Filler
- Wall or Overflow Connection Included
- Support System to Reduce Wobble

CEC Compliant · Cal Green Compliant · Meets EPA WaterSense℠ Standards · NSF Lead-Free Certified · ADA Compliant · UltraSeal™ · SecurePfit™

Rhen
PAGE: 42

Kenzo
PAGE: 58

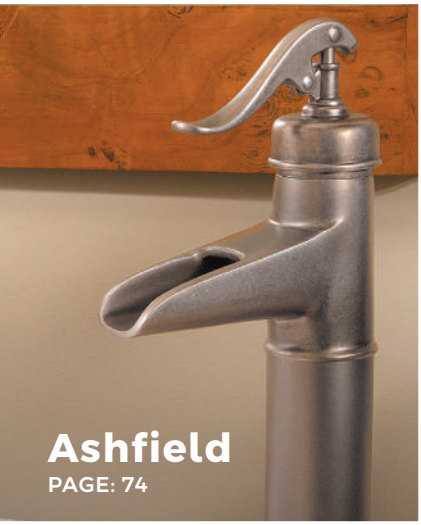

Ashfield
PAGE: 74

Arterra
PAGE: 84

Marielle
PAGE: 94

Contempra
PAGE: 102

Deckard
PAGE: 112

Northcott
PAGE: 120

Bronson
PAGE: 128

Saxton
PAGE: 136

Avalon
PAGE: 144

Arkitek
PAGE: 152

Weller
PAGE: 160

Parisa
PAGE: 168

Rhen

FOLDS THAT FLOW WITH THE NATURAL
ELEGANCE OF WATER. RHEN MAKES AN ENTRANCE.

In a world of haste, there is a haven to be found in the graceful folds of Rhen. Hourglass silhouettes echo hand-tailored eveningwear, enchanting from every angle, yet utterly mesmerizing in motion. Inspired by the designer's heirloom wedding gown, the elements of this collection are perfectly imperfect organic pieces that imbue the transitional faucet with a twist of nostalgia.

Weighty brass fixtures include lavatory faucets, tub fillers, slide bar kits, diverters and a full suite of accessories, individually draped in four refined finishes.

As water cascades from the petite peek-a-boo trough spout, your elegant evenings out begin even before you leave the bath, and returning home becomes a welcome respite, no matter the hour.

Single Control Lavatory
LG42-RH1C

8" Widespread Lavatory
LG49-RH1C

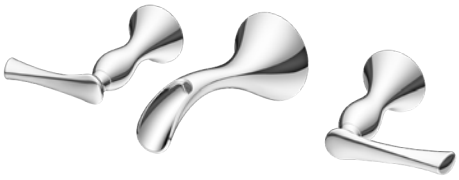

8" Wall Mount Lavatory
LG49-RH2C

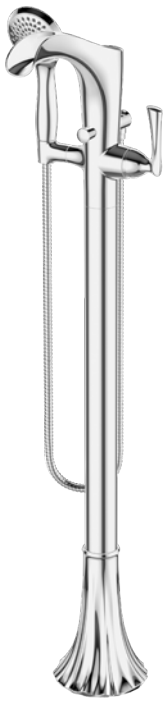

Single Hole
Free-Standing Tub Filler
with Hand Shower
LG6-1RHC

3-Hole Roman
Tub Trim
RT6-5RHC

4-Hole Roman Tub
Trim with Hand Shower
LG6-4RHC

Tub & Shower
LG89-8RHC
Shower Only
LG89-7RHC
Valve Only
R89-1RHC

Diverter Trim
Ø16-RH1C

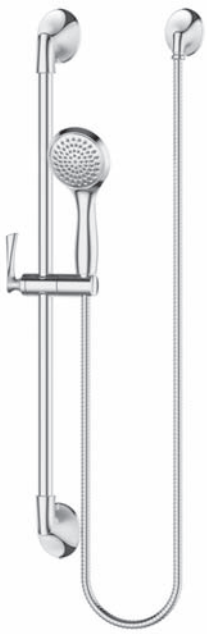

Slide Bar/Hand Shower Kit
LG16-3RHC

Accessories

18" & 24" Towel Bar
BTB-RH1C & BTB-RH2C

Towel Ring
BRB-RHØC

Paper Holder
BPH-RHØC

Robe Hook
BRH-RHØC

Single Control Lavatory Trough

Model	Finish	Case Qty	List Price
LG42-RH1C	Polished Chrome	3	$378
LG42-RH1K	Brushed Nickel	3	$529
LG42-RH1B	Matte Black	3	$540
LG42-RH1BG	Brushed Gold	3	$552

Technical Info

Holes: · 1 or 3-Hole 4" Installation

Features:
- Ceramic Disc Valve
- Metal Lever Handle
- Single Post Mounting Ring
- 3-Hole Deckplate Sold Separately 961-232*
- All Metal Push and Seal
- 1.2 gpm @ 60 psi

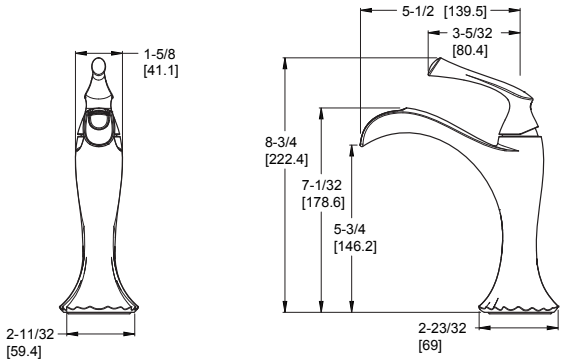

8" Widespread Lavatory Trough

Model	Finish	Case Qty	List Price
LG49-RH1C	Polished Chrome	3	$505
LG49-RH1K	Brushed Nickel	3	$719
LG49-RH1B	Matte Black	3	$726
LG49-RH1BG	Brushed Gold	3	$737

Holes: · 3-Hole 8-15" Installation

Features:
- Ceramic Disc Valves
- Metal Lever Handles
- All Metal Push and Seal™
- Order 971-Ø26Ø to Increase Max. Install Depth to 3"
- 1.2 gpm @ 60 psi

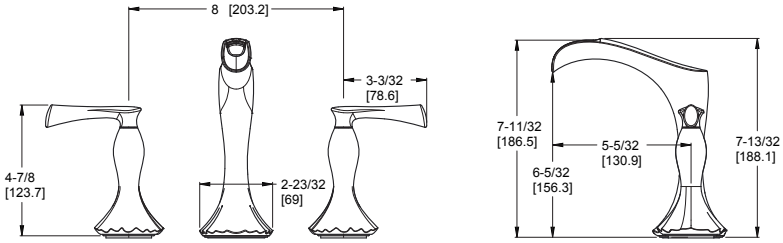

CEC Compliant · Cal Green Compliant · Meets EPA WaterSense℠ Standards · NSF Lead-Free Certified · ADA Compliant · UltraSeal™ · SecurePfit™

SHOWROOM PREFERRED

8" Wall Mount Lavatory Trough

Model	Finish	Case Qty	List Price
LG49-RH2C	Polished Chrome	3	$378
LG49-RH2K	Brushed Nickel	3	$598
LG49-RH2B	Matte Black	3	$604
LG49-RH2BG	Brushed Gold	3	$615

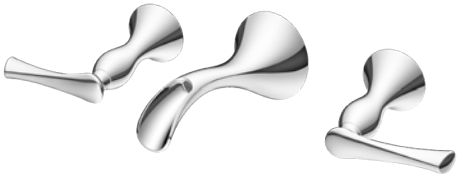

Technical Info

Holes: · 3-Hole 8-15" Installation

Features:
· Ceramic Disc Valves
· Metal Lever Handles
· Grid Strainer Sold Seperately
· 1.2 gpm @ 60 psi

Must Order Wall Mount Rough In Valve Separately. See Valve Section.

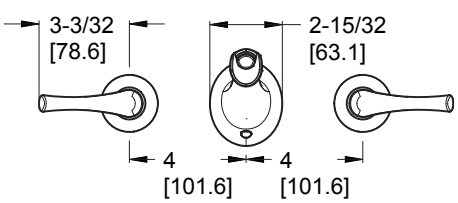

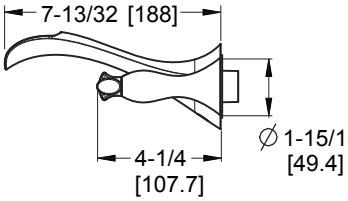

Universal Grid Strainer

972-1Ø4A	Polished Chrome	6	$51
972-1Ø4J	Brushed Nickel	6	$59
972-1Ø4B	Matte Black	6	$66
972-1Ø4BG	Brushed Gold	6	$88

Features:
· All Metal Grid Strainer
· With Overflow
· 1 1/4" Tailpiece

Universal Grid Strainer

972-1Ø3A	Polished Chrome	6	$51
972-1Ø3J	Brushed Nickel	6	$59
972-1Ø3B	Matte Black	6	$66
972-1Ø3BG	Brushed Gold	6	$88

Features:
· All Metal Grid Strainer
· No Overflow
· 1 1/4" Tailpiece

Rhen™

CEC Compliant | Cal Green Compliant | Meets EPA WaterSense℠ Standards | NSF Lead-Free Certified | ADA Compliant | UltraSeal™ | SecurePfit™

3-Hole Roman Tub Trim

Model	Finish	Case Qty	List Price
RT6-5RHC	Polished Chrome	3	$604
RT6-5RHK	Brushed Nickel	3	$784
RT6-5RHB	Matte Black	3	$795
RT6-5RHBG	Brushed Gold	3	$813

Technical Info

Holes: · 3-Hole

Features:
· Ceramic Disc Valves
· Metal Lever Handles
· Fixed Spout

Must Order ØX6-Ø5ØR or ØX6-15ØR Rough In Valve Separately. See Valve Section.

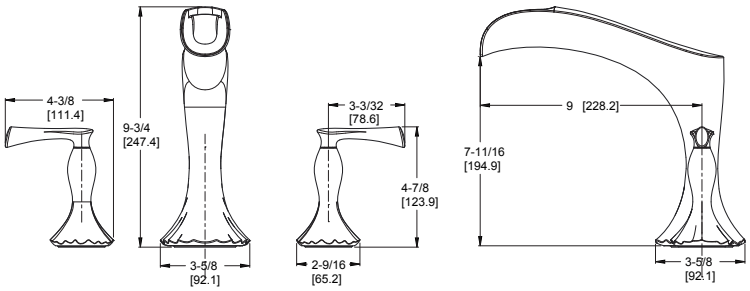

4-Hole Roman Tub Trim with Hand Shower

LG6-4RHC	Polished Chrome	3	$685
LG6-4RHK	Brushed Nickel	3	$987
LG6-4RHB	Matte Black	3	$1,004
LG6-4RHBG	Brushed Gold	3	$1,039

Holes: · 4-Hole

Features:
· Ceramic Disc Valves
· Metal Lever Handles
· Fixed Spout
· Handheld Shower
· Hand Shower 1.8 gpm @ 80psi

Must Order ØX6-44ØR Rough In Valve Separately. See Valve Section.

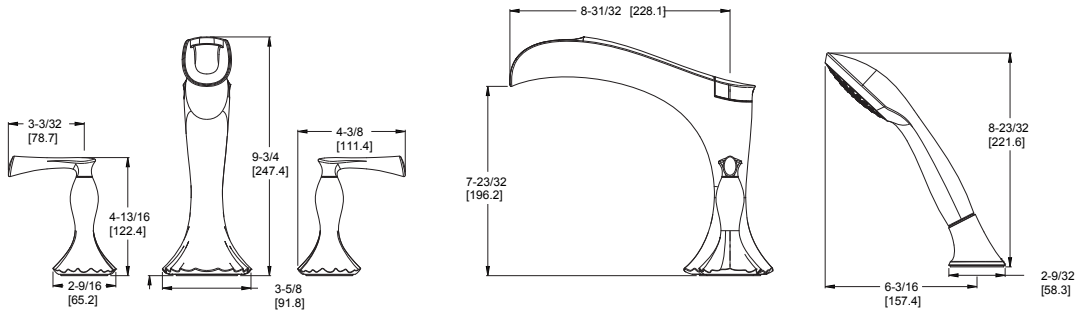

CEC Compliant · Cal Green Compliant · Meets EPA WaterSense℠ Standards · NSF Lead-Free Certified · ADA Compliant · UltraSeal™ · SecurePfit™

SHOWROOM PREFERRED

Single Hole Free-Standing Tub Filler with Hand Shower

Model	Finish	Case Qty	List Price
LG6-1RHC	Polished Chrome	1	$1,756
LG6-1RHK	Brushed Nickel	1	$1,911
LG6-1RHB	Matte Black	1	$2,062
LG6-1RHBG	Brushed Gold	1	$2,232

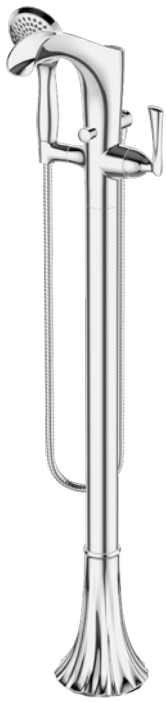

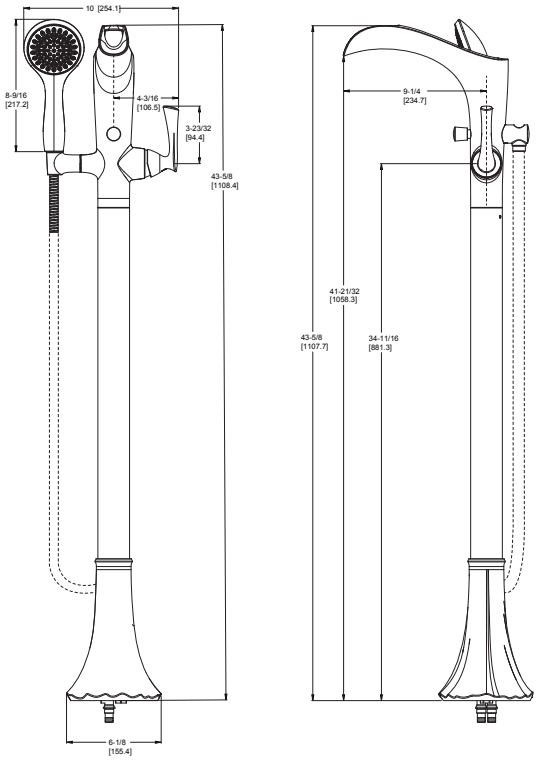

Technical Info

Holes: · 1-Hole Installation

Features:
- Modern Trough Design
- Ceramic Disc Valve
- Metal Lever Handles
- Brass Construction
- 8 gpm @ 60 psi
- Hand Shower 1.8 gpm @ 80 psi

Must Order Free-Standing Rough In Valve Separately.
See Valve Section.

CEC Compliant | Cal Green Compliant | Meets EPA WaterSense℠ Standards | NSF Lead-Free Certified | ADA Compliant | UltraSeal™ | SecurePfit™

Pressure Balance Tub & Shower Trim

Model	Finish	Case Qty	List Price
LG89-8RHC	Polished Chrome	3	$436
LG89-8RHK	Brushed Nickel	3	$546
LG89-8RHB	Matte Black	3	$610
LG89-8RHBG	Brushed Gold	3	$633

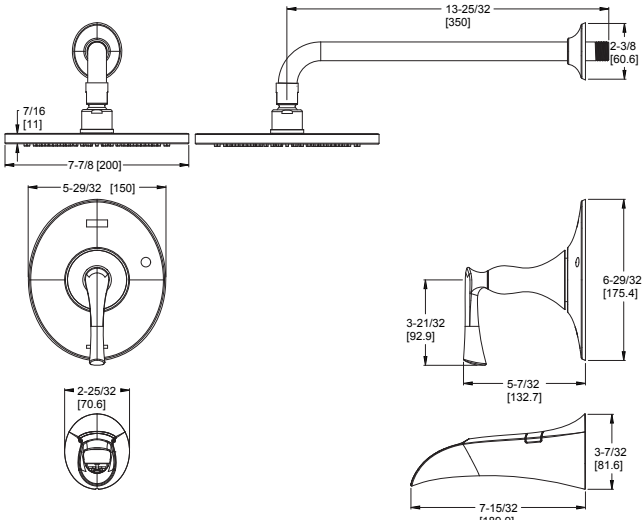

Technical Info

Features:
- SecurePfit™
- Metal Lever Handle
- Hot/Cold Indicator
- All Brass Raincan Showerhead
- IP Connection Only Tub Spout
- SecurePfit™ Wall Flange
- Showerhead 1.8 gpm @ 80 psi

Must Order Pressure Balance Rough in Valve Separately. See Valve Section.

Pressure Balance Shower Trim

LG89-7RHC	Polished Chrome	3	$361
LG89-7RHK	Brushed Nickel	3	$450
LG89-7RHB	Matte Black	3	$505
LG89-7RHBG	Brushed Gold	3	$523

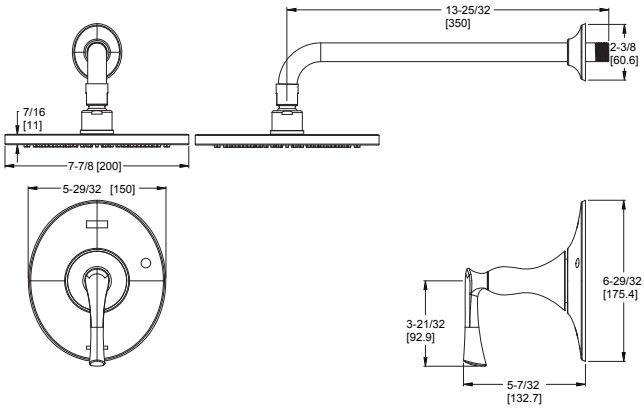

Features:
- SecurePfit™
- Metal Lever Handle
- Hot/Cold Indicator
- All Brass Raincan Showerhead
- SecurePfit™ Wall Flange
- Showerhead 1.8 gpm @ 80 psi

Must Order Pressure Balance Rough in Valve Separately. See Valve Section.

CEC Compliant | Cal Green Compliant | Meets EPA WaterSense℠ Standards | NSF Lead-Free Certified | ADA Compliant | UltraSeal™ | SecurePfit™

SHOWROOM PREFERRED

Pressure Balance Valve Only Trim

Model	Finish	Case Qty	List Price
R89-1RHC	Polished Chrome	3	$204
R89-1RHK	Brushed Nickel	3	$262
R89-1RHB	Matte Black	3	$279
R89-1RHBG	Brushed Gold	3	$291

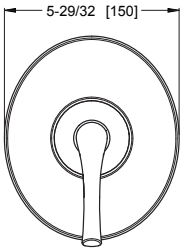

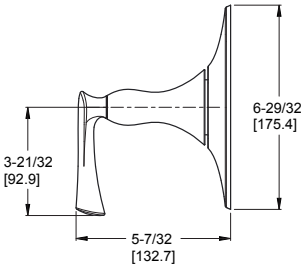

Technical Info

Features:
- SecurePfit™
- Metal Lever Handle
- Hot/Cold Indicator
- SecurePfit™ Wall Flange

Must Order Pressure Balance Rough in Valve Separately. See Valve Section.

Diverter Trim Only

Ø16-RH1C	Polished Chrome	3	$123
Ø16-RH1K	Brushed Nickel	3	$169
Ø16-RH1B	Matte Black	3	$189
Ø16-RH1BG	Brushed Gold	3	$204

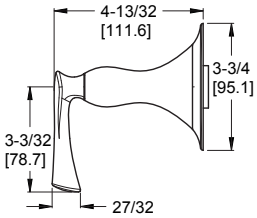

Features:
- Metal Lever Handle and Matching Flange
- Can Be Used with Ø15-2WDX for Cal Green Compliant Applications

Must Order Ø15-4WDX or Ø15-2WDX Rough In Valve Separately. See Valve Section.

Rhen™

CEC Compliant | Cal Green Compliant | Meets EPA WaterSense℠ Standards | NSF Lead-Free Certified | ADA Compliant | UltraSeal™ | SecurePfit™

Rhen™ - Tub & Shower

Slide Bar/Hand Shower Kit

Model	Finish	Case Qty	List Price
LG16-3RHC	Polished Chrome	3	$378
LG16-3RHK	Brushed Nickel	3	$500
LG16-3RHB	Matte Black	3	$583
LG16-3RHBG	Brushed Gold	3	$609

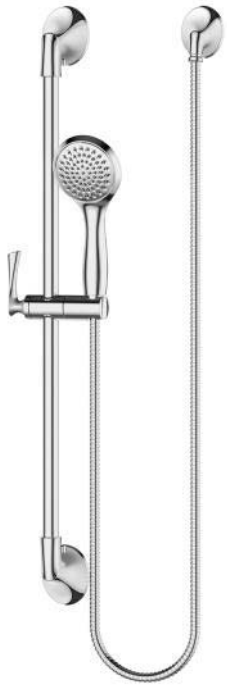

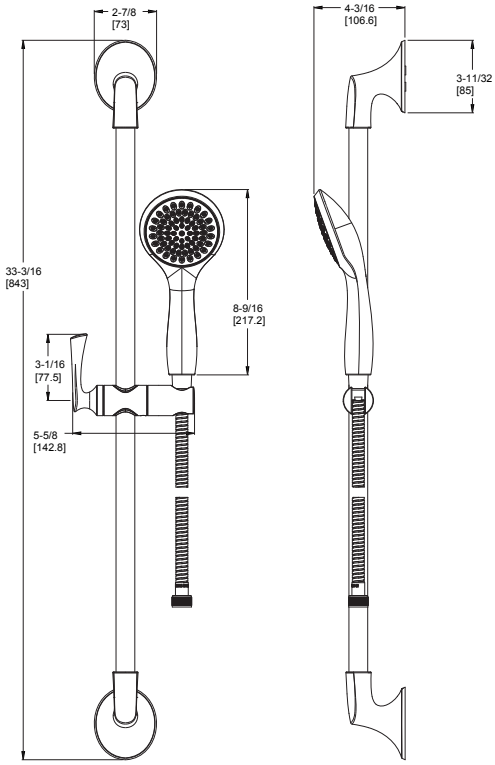

Technical Info

Features:

- Complete Slide Bar Package with Hand Held Shower, Hose, Drop Elbow, and Slide Bar
- Self Cleaning Handheld Showerhead
- 60" Metal Hose with Matching Finish
- Back Flow Prevention
- Works with Rhen Diverter Trim and Valve
- Not to be Used as a Grab Bar
- Hand Shower 1.8 gpm @ 60 psi

CEC Compliant | Cal Green Compliant | Meets EPA WaterSense℠ Standards | NSF Lead-Free Certified | ADA Compliant | UltraSeal™ | SecurePfit™

SHOWROOM PREFERRED

Showerhead

Model	Finish	Case Qty	List Price
973-264A	Polished Chrome	1	$151
973-264J	Brushed Nickel	1	$166
973-264B	Matte Black	1	$203
973-264BG	Brushed Gold	1	$227

Technical Info

Features:
- All Brass Raincan Showerhead
- Easy To Clean Spray Nozzles
- Shower Arm and Flange Sold Separately
- Order 941-Ø55Ø for 1.5 gpm Showerhead Insert
- Showerhead 1.8 gpm @ 80 psi

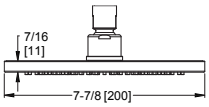

Shower Arm Flange

96Ø-343A	Polished Chrome	1	$17
96Ø-343J	Brushed Nickel	1	$16
96Ø-343B	Matte Black	1	$19
96Ø-343BG	Brushed Gold	1	$24

Features:
- All Metal
- Matches Rhen Style & Finishes

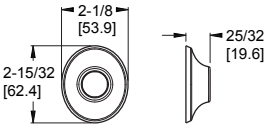

Tub Spout

92Ø-2Ø9A	Polished Chrome	1	$91
92Ø-2Ø9J	Brushed Nickel	1	$98
92Ø-2Ø9B	Matte Black	1	$108
92Ø-2Ø9BG	Brushed Gold	1	$130

Features:
- All Metal
- IP & Quick Connect Diverted Spout

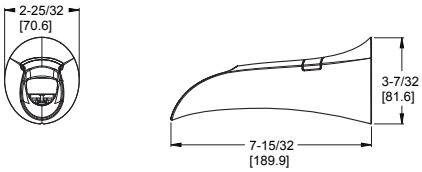

Rhen™

CEC Compliant | Cal Green Compliant | Meets EPA WaterSense℠ Standards | NSF Lead-Free Certified | ADA Compliant | UltraSeal™ | SecurePfit™

60" Hose

Model	Finish	Case Qty	List Price
951-335A	Polished Chrome	6	$47
951-335J	Brushed Nickel	6	$110
951-335B	Matte Black	6	$159
951-335BG	Brushed Gold	6	$193

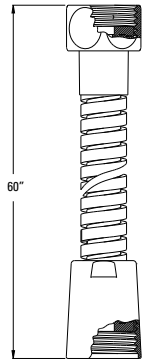

Technical Info

Features:
- 60" Anti-Twist Hose
- Matching Finish Metal Hose

Oval Drop Elbow

96Ø-344A	Polished Chrome	3	$38
96Ø-344J	Brushed Nickel	3	$52
96Ø-344B	Matte Black	3	$82
96Ø-344BG	Brushed Gold	3	$68

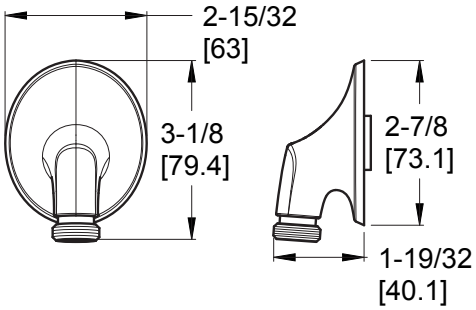

Features:
- 1/2" IP Connection
- Matching Finish

18" Towel Bar

Model	Finish	Case Qty	List Price
BTB-RH1C	Polished Chrome	3	$125
BTB-RH1K	Brushed Nickel	3	$136
BTB-RH1B	Matte Black	3	$148
BTB-RH1BG	Brushed Gold	3	$161

Technical Info

Holes: · 2-Hole

Features:
- Premium Metal Construction
- Superior Mounting Posts
- Concealed Screw Installation
- Mounting Hardware Included

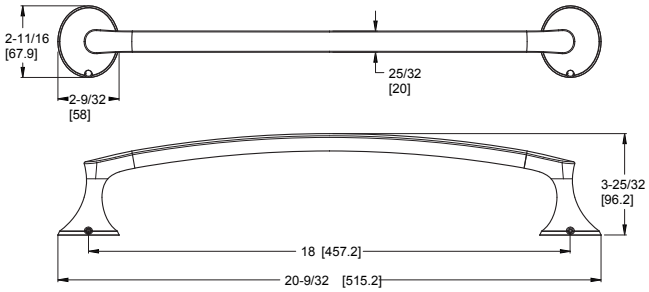

24" Double Towel Bar

BTB-RH2C	Polished Chrome	3	$181
BTB-RH2K	Brushed Nickel	3	$192
BTB-RH2B	Matte Black	3	$204
BTB-RH2BG	Brushed Gold	3	$216

Holes: · 2-Hole

Features:
- Premium Metal Construction
- Superior Mounting Posts
- Concealed Screw Installation
- Mounting Hardware Included

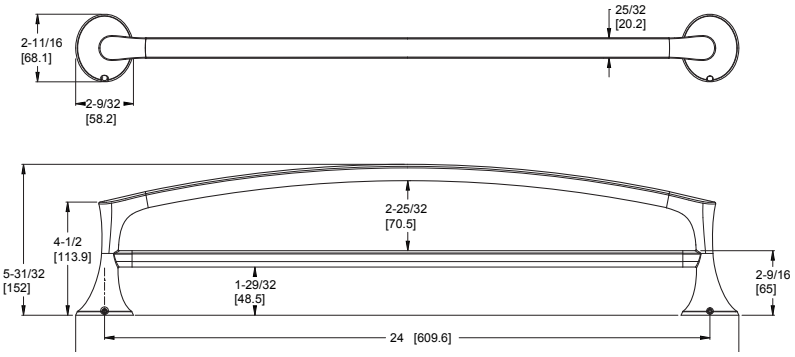

Towel Ring

BRB-RHØC	Polished Chrome	3	$96
BRB-RHØK	Brushed Nickel	3	$108
BRB-RHØB	Matte Black	3	$120
BRB-RHØBG	Brushed Gold	3	$131

Holes: · 2-Hole

Features:
- Premium Metal Construction
- Superior Mounting Posts
- Concealed Screw Installation
- Mounting Hardware Included

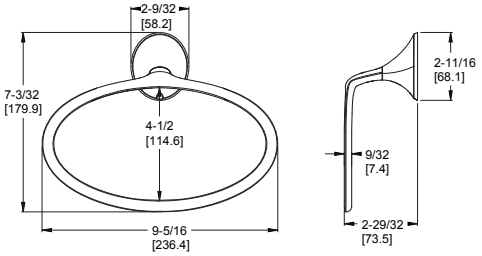

Rhen™ - Accessories

Paper Holder

Model	Finish	Case Qty	List Price
BPH-RHØC	Polished Chrome	3	$93
BPH-RHØK	Brushed Nickel	3	$111
BPH-RHØB	Matte Black	3	$123
BPH-RHØBG	Brushed Gold	3	$134

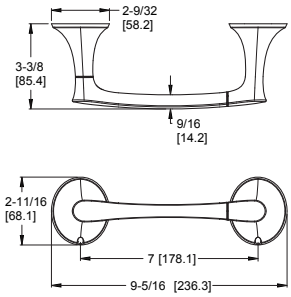

Technical Info

Holes: · 1-Hole

Features:
- Premium Metal Construction
- Pivot Swing Paper Mount
- Concealed Screw Installation
- Mounting Hardware Included

Robe Hook

Model	Finish	Case Qty	List Price
BRH-RHØC	Polished Chrome	3	$65
BRH-RHØK	Brushed Nickel	3	$76
BRH-RHØB	Matte Black	3	$88
BRH-RHØBG	Brushed Gold	3	$100

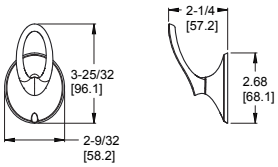

Technical Info

Holes: · 1-Hole

Features:
- Premium Metal Construction
- Superior Mounting Posts
- Concealed Screw Installation
- Mounting Hardware Included

Kenzo

A New Wave of Modern. A bathroom designed with Kenzo water fixtures relaxes your mind and body. The Kenzo collection focuses on the basics: Water experience in its simplest form. Calm lines, and clear function - delivering water in a unique band. A delight for any kind of dwelling.

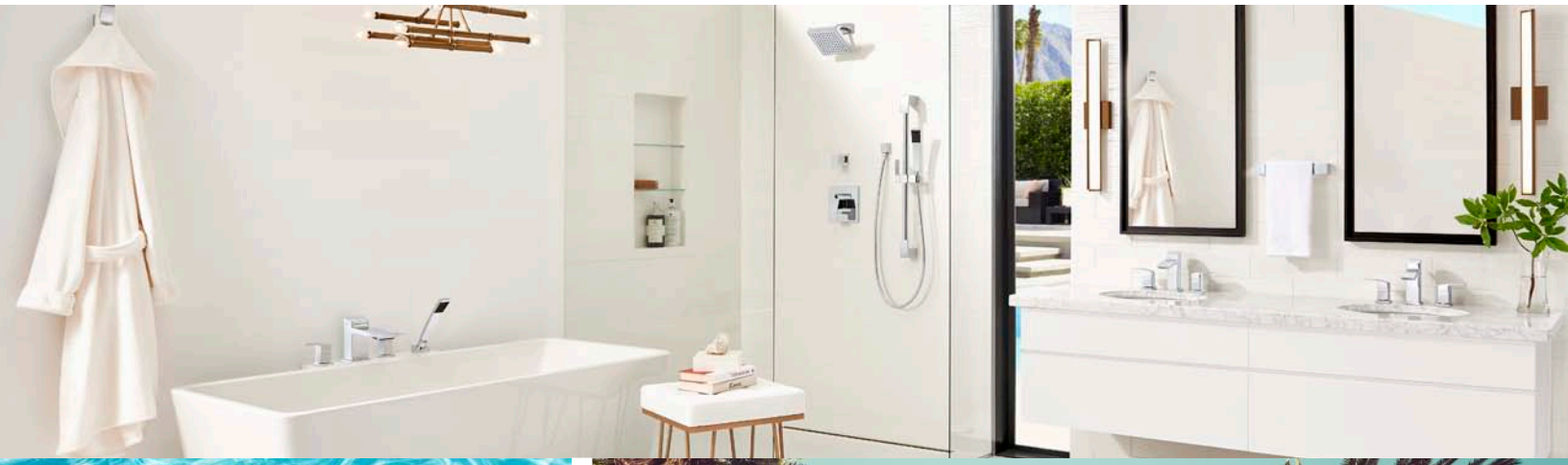

SHOWROOM PREFERRED

Single Control Lavatory
LG42-DF1C

Single Control Lavator Trough
LG42-DFØC

Single Control Vessel Lavatory
LG4Ø-DF1C

Single Control Vessel Lavatory Trough
LG4Ø-DFØC

8" Widespread Lavatory
LG49-DF2C

8" Widespread Lavatory Trough
LG49-DFØC

3-Hole Roman Tub Trim
RT6-5D1C

3-Hole Roman Tub Trough Trim
RT6-5DFC

4-Hole Roman Tub Trough Trim with Hand Shower
LG6-4DFC

8" Wall Mount Lavatory
LG49-DF3C

8" Wall Mount Lavatory Trough
LG49-DF1C

Tub & Shower
LG89-8DFC

Shower Only
LG89-7DFC

Diverter Trim
Ø16-DFØC

Valve Only
R89-1DFC

Slide Bar/
Hand Shower Kit
LG16-3DFC

Accessories

18" & 24" Towel Bar
BTB-DF1C & BTB-DF2C

Towel Ring
BRB-DF1C

Paper Holder
BPH-DF1C

Robe Hook
BRH-DF1C

Single Control Vessel Lavatory

Model	Finish	Case Qty	List Price
LG4Ø-DF1C	Polished Chrome	3	$444
LG4Ø-DF1K	Brushed Nickel	3	$611
LG4Ø-DF1B	Matte Black	3	$620

Technical Info

Holes: · 1-Hole Installation

Features:
- Ceramic Disc Valve
- Metal Lever Handle
- Single Post Mounting Ring
- Grid Strainer Sold Separately
- 1.2 gpm @ 60 psi

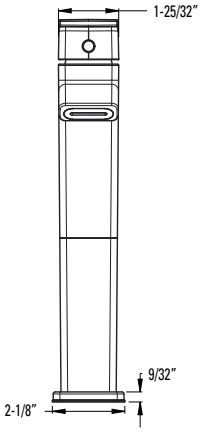

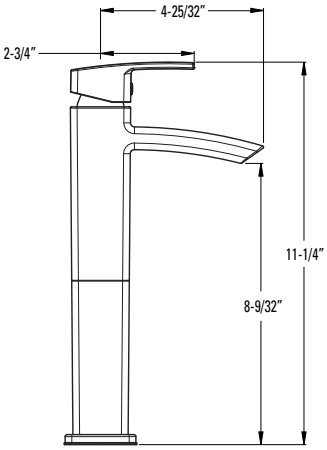

Single Control Vessel Lavatory Trough

LG4Ø-DFØC	Polished Chrome	3	$468
LG4Ø-DFØK	Brushed Nickel	3	$636
LG4Ø-DFØB	Matte Black	3	$649

Holes: · 1-Hole Installation

Features:
- Ceramic Disc Valve
- Metal Lever Handle
- Single Post Mounting Ring
- Grid Strainer Sold Separately
- 1.2 gpm @ 60 psi

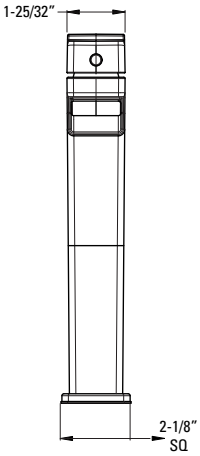

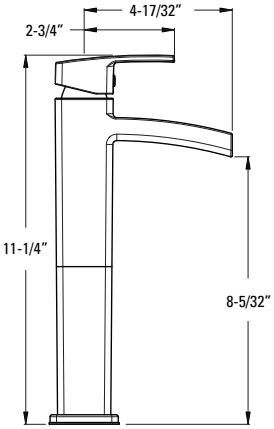

CEC Compliant · Cal Green Compliant · Meets EPA WaterSense℠ Standards · NSF Lead-Free Certified · ADA Compliant · UltraSeal™ · SecurePfit™

SHOWROOM PREFERRED

Single Control Lavatory Trough

Model	Finish	Case Qty	List Price
LG42-DFØC	Polished Chrome	3	$393
LG42-DFØK	Brushed Nickel	3	$548
LG42-DFØB	Matte Black	3	$560

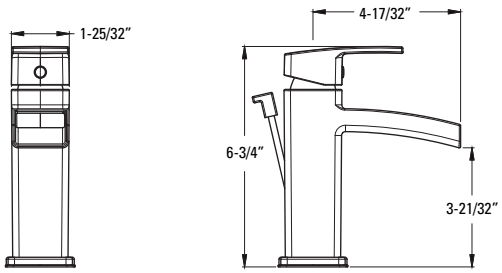

Technical Info

Holes:
- 1 or 3-Hole 4" Installation

Features:
- Ceramic Disc Valve
- Metal Lever Handle
- Single Post Mounting Ring
- 3-Hole Deckplate Included
- All Metal Pop-Up
- 1.2 gpm @ 60 psi

CEC Compliant | Cal Green Compliant | Meets EPA WaterSense℠ Standards | NSF Lead-Free Certified | ADA Compliant | UltraSeal™ | SecurePfit™

Kenzo™ - Lavatory Faucets

8" Widespread Lavatory

Model	Finish	Case Qty	List Price
LG49-DF2C	Polished Chrome	3	$501
LG49-DF2K	Brushed Nickel	3	$719
LG49-DF2B	Matte Black	3	$734

Technical Info

Holes: · 3-Hole 8-15" Installation

Features:
- Ceramic Disc Valves
- Metal Lever Handles
- All Metal Pop-Up
- Quick Connect Hose Assembly
- Order 971-Ø86Ø to Increase Max. Install Depth to 3"
- 1.2 gpm @ 60 psi

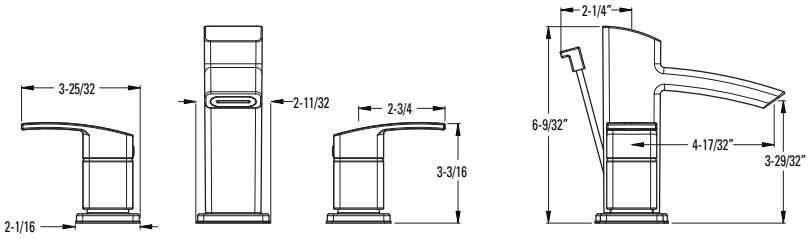

8" Widespread Lavatory Trough

LG49-DFØC	Polished Chrome	3	$524
LG49-DFØK	Brushed Nickel	3	$745
LG49-DFØB	Matte Black	3	$752

Holes: · 3-Hole 8-15" Installation

Features:
- Ceramic Disc Valves
- Metal Lever Handles
- All Metal Pop-Up
- Quick Connect Hose Assembly
- Order 971-Ø86Ø to Increase Max. Install Depth to 3"
- 1.2 gpm @ 60 psi

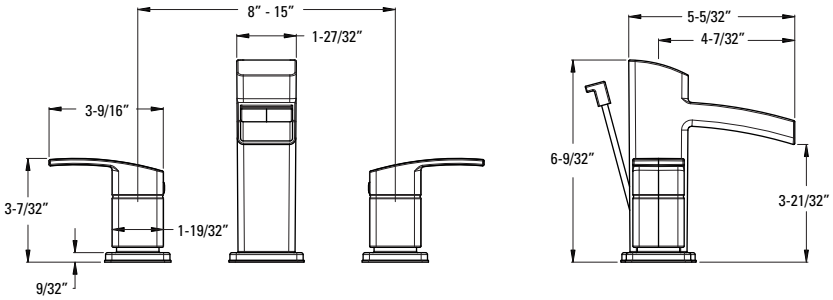

CEC Compliant · Cal Green Compliant · Meets EPA WaterSense℠ Standards · NSF Lead-Free Certified · ADA Compliant · UltraSeal™ · SecurePfit™

SHOWROOM PREFERRED

8" Wall Mount Lavatory

Model	Finish	Case Qty	List Price
LG49-DF3C	Polished Chrome	3	$381
LG49-DF3K	Brushed Nickel	3	$601
LG49-DF3B	Matte Black	3	$612

Technical Info

Holes: · 3-Hole 8" Installation

Features:
· Ceramic Disc Valves
· Metal Lever Handles
· Grid Strainer Sold Seperately
· 1.2 gpm @ 60 psi

Must Order Wall Mount Rough In Valve Separately. See Valve Section.

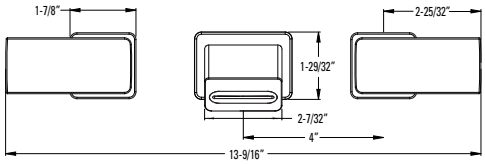

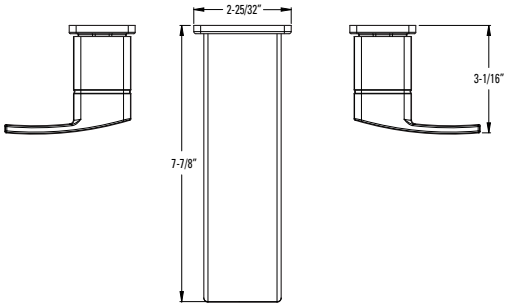

8" Wall Mount Lavatory Trough

LG49-DF1C	Polished Chrome	3	$393
LG49-DF1K	Brushed Nickel	3	$619
LG49-DF1B	Matte Black	3	$627

Holes: · 3-Hole 8" Installation

Features:
· Ceramic Disc Valves
· Metal Lever Handles
· Grid Strainer Sold Seperately
· 1.2 gpm @ 60 psi

Must Order Wall Mount Rough In Valve Separately. See Valve Section.

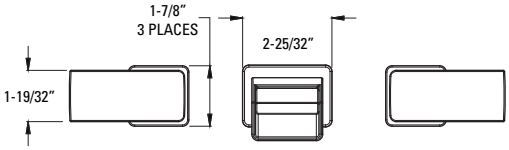

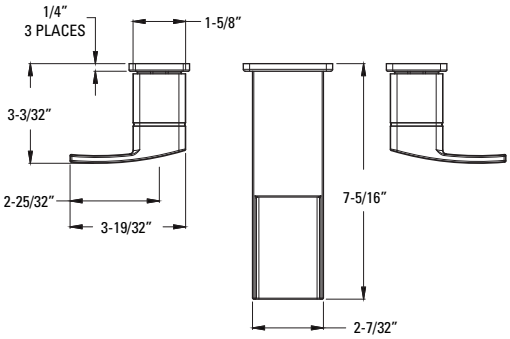

CEC Compliant · Cal Green Compliant · Meets EPA WaterSense℠ Standards · NSF Lead-Free Certified · ADA Compliant · UltraSeal™ · SecurePfit™

Universal Grid Strainer

Model	Finish	Case Qty	List Price
972-1Ø4A	Polished Chrome	6	$51
972-1Ø4J	Brushed Nickel	6	$59
972-1Ø4B	Matte Black	6	$66

Technical Info

Features:
- All Metal Grid Strainer
- With Overflow
- 1 1/4" Tailpiece

Universal Grid Strainer

Model	Finish	Case Qty	List Price
972-1Ø3A	Polished Chrome	6	$51
972-1Ø3J	Brushed Nickel	6	$59
972-1Ø3B	Matte Black	6	$66

Features:
- All Metal Grid Strainer
- No Overflow
- 1 1/4" Tailpiece

CEC Compliant | Cal Green Compliant | Meets EPA WaterSense℠ Standards | NSF Lead-Free Certified | ADA Compliant | UltraSeal™ | SecurePfit™

SHOWROOM PREFERRED

3-Hole Roman Tub Trim

Model	Finish	Case Qty	List Price
RT6-5D1C	Polished Chrome	3	$608
RT6-5D1K	Brushed Nickel	3	$799
RT6-5D1B	Matte Black	3	$814

Technical Info

Holes: · 3-Hole

Features: · Ceramic Disc Valves
· Metal Lever Handles
· Fixed Spout

Must Order ØX6-Ø5ØR or ØX6-15ØR Rough In Valve Separately. See Valve Section.

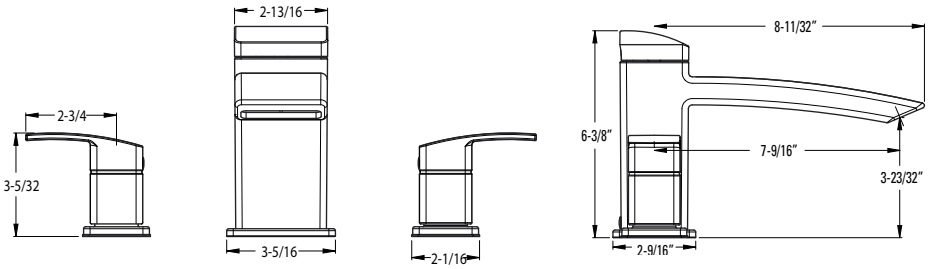

3-Hole Roman Tub Trough Trim

Model	Finish	Case Qty	List Price
RT6-5DFC	Polished Chrome	3	$643
RT6-5DFK	Brushed Nickel	3	$821
RT6-5DFB	Matte Black	3	$833

Holes: · 3-Hole

Features: · Ceramic Disc Valves
· Metal Lever Handles
· Fixed Spout

Must Order ØX6-Ø5ØR or ØX6-15ØR Rough In Valve Separately. See Valve Section.

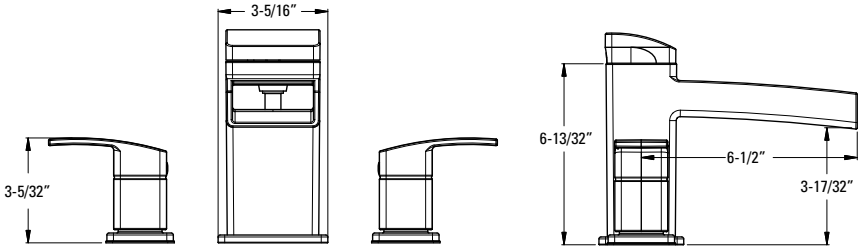

Kenzo™

CEC Compliant · Cal Green Compliant · Meets EPA WaterSense℠ Standards · NSF Lead-Free Certified · ADA Compliant · UltraSeal™ · SecurePfit™

Kenzo™ - Tub Fillers

4-Hole Roman Tub Trim with Hand Shower

Model	Finish	Case Qty	List Price
LG6-4D1C	Polished Chrome	3	$685
LG6-4D1K	Brushed Nickel	3	$1,006
LG6-4D1B	Matte Black	3	$1,024

Technical Info

Holes: · 4-Hole

Features:
- Ceramic Disc Valves
- Metal Lever Handles
- Fixed Spout
- Handheld Shower
- Easy To Clean Spray Nozzles
- Hand Shower 1.8 gpm @ 80psi

Must Order ØX6-44ØR Rough In Valve Separately. See Valve Section.

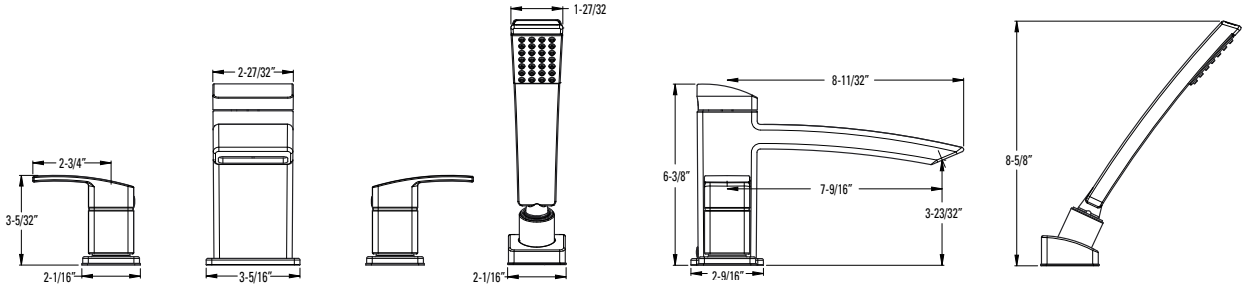

4-Hole Roman Tub Trough Trim with Hand Shower

LG6-4DFC	Polished Chrome	3	$710
LG6-4DFK	Brushed Nickel	3	$1,021
LG6-4DFB	Matte Black	3	$1,040

Holes: · 4-Hole

Features:
- Ceramic Disc Valves
- Metal Lever Handles
- Fixed Spout
- Handheld Shower
- Easy To Clean Spray Nozzles
- Hand Shower 1.8 gpm @ 80psi

Must Order ØX6-44ØR Rough In Valve Separately. See Valve Section.

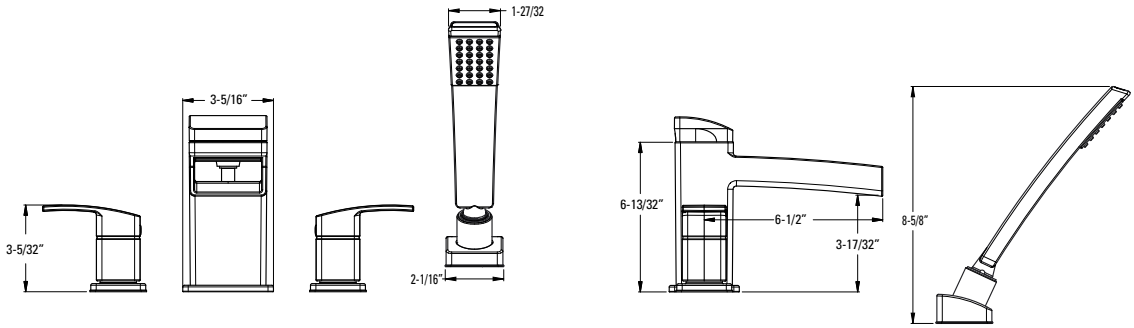

CEC Compliant · Cal Green Compliant · Meets EPA WaterSense℠ Standards · NSF Lead-Free Certified · ADA Compliant · UltraSeal™ · SecurePfit™

SHOWROOM PREFERRED

Pressure Balance Tub & Shower Trim

Model	Finish	Case Qty	List Price
LG89-8DFC	Polished Chrome	3	$375
LG89-8DFK	Brushed Nickel	3	$581
LG89-8DFB	Matte Black	3	$592

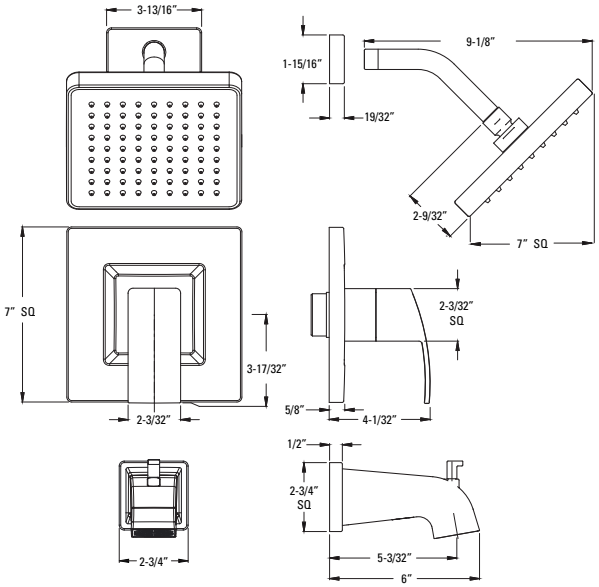

Technical Info

Features:
- SecurePfit™
- Metal Lever Handle
- Hot/Cold Indicator
- Decorative Raincan Showerhead
- Easy To Clean Spray Nozzles
- Quick Connect Metal Diverter Tub Spout
- Order 941-Ø55Ø for 1.5 gpm Showerhead Insert
- Showerhead 1.8 gpm @ 80 psi

Must Order Pressure Balance Rough in Valve Separately. See Valve Section.

Pressure Balance Shower Trim

LG89-7DFC	Polished Chrome	3	$280
LG89-7DFK	Brushed Nickel	3	$458
LG89-7DFB	Matte Black	3	$465

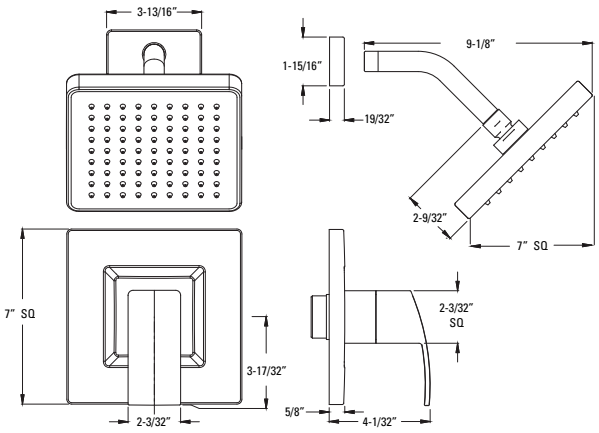

Features:
- SecurePfit™
- Metal Lever Handle
- Hot/Cold Indicator
- Decorative Raincan Showerhead
- Easy To Clean Spray Nozzles
- Order 941-Ø55Ø for 1.5 gpm Showerhead Insert
- Showerhead 1.8 gpm @ 80 psi

Must Order Pressure Balance Rough in Valve Separately. See Valve Section.

CEC Compliant | Cal Green Compliant | Meets EPA WaterSense℠ Standards | NSF Lead-Free Certified | ADA Compliant | UltraSeal™ | SecurePfit™

Pressure Balance Valve Only Trim

Model	Finish	Case Qty	List Price
R89-1DFC	Polished Chrome	3	$168
R89-1DFK	Brushed Nickel	3	$272
R89-1DFB	Matte Black	3	$277

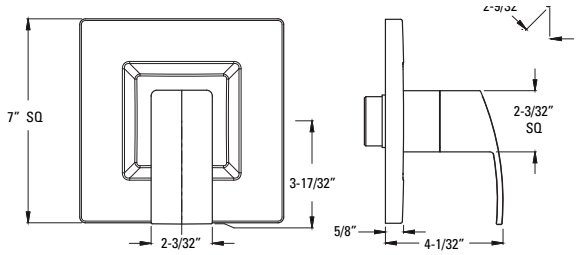

Technical Info

Features:
- SecurePfit™
- Metal Lever Handle
- Hot/Cold Indicator

Must Order Pressure Balance Rough in Valve Separately. See Valve Section.

Diverter Trim Only

Ø16-DFØC	Polished Chrome	3	$121
Ø16-DFØK	Brushed Nickel	3	$167
Ø16-DFØB	Matte Black	3	$170

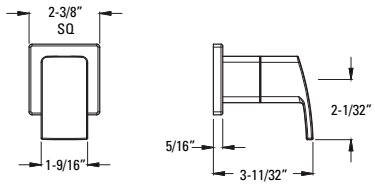

Features:
- SecurePfit™
- Metal Lever Handle and Matching Flange
- Can Be Used with Ø15-2WDX for Cal Green Compliant Applications

Must Order Ø15-4WDX or Ø15-2WDX Rough In Valve Separately. See Valve Section.

CEC Compliant | Cal Green Compliant | Meets EPA WaterSense℠ Standards | NSF Lead-Free Certified | ADA Compliant | UltraSeal™ | SecurePfit™

SHOWROOM PREFERRED

Slide Bar/Hand Shower Kit

Model	Finish	Case Qty	List Price
LG16-3DFC	Polished Chrome	3	$384
LG16-3DFK	Brushed Nickel	3	$511
LG16-3DFB	Matte Black	3	$595

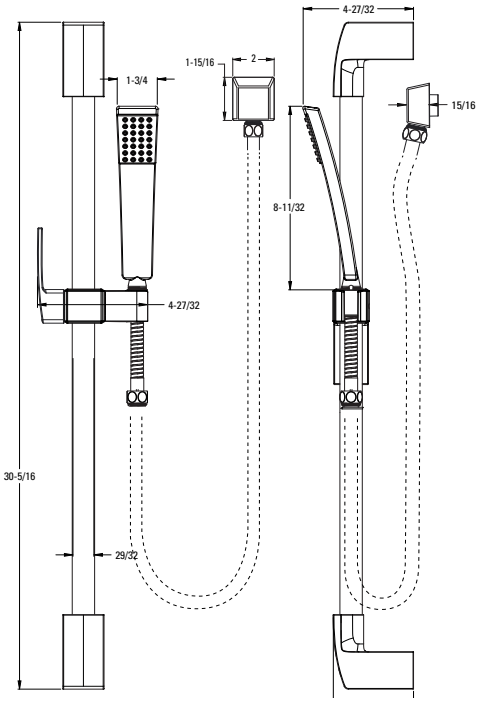

Technical Info

Features:
- Complete Slide Bar Package with Hand Held Shower, Hose, Drop Elbow, and Slide Bar
- Wall Mount Bracket and Drop Elbow
- Easy To Clean Spray Nozzles
- 60" Metal Hose with Matching Finish
- Back Flow Prevention
- Works with Kenzo Diverter Trim and Valve
- Not to be Used as a Grab Bar
- Hand Shower 1.8 gpm @ 80 psi

SHOWROOM preferred

Hand Shower Kit

LG16-1DFC	Polished Chrome	3	$217
LG16-1DFK	Brushed Nickel	3	$346
LG16-1DFB	Matte Black	3	$354

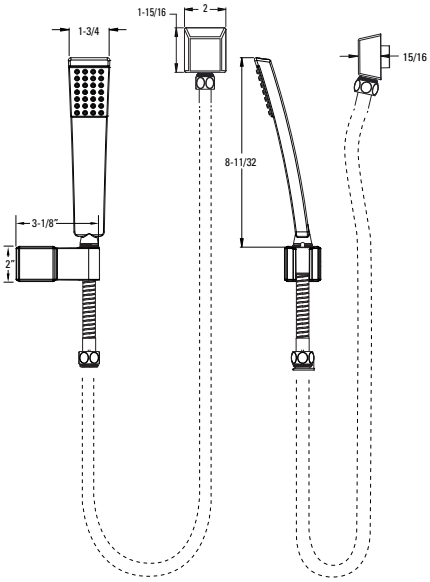

Features:
- Wall Mount Bracket and Drop Elbow
- Easy To Clean Spray Nozzles
- Metal Hose with Matching Finish
- Back Flow Prevention
- Hand Shower 1.8 gpm @ 80 psi

CEC Compliant | Cal Green Compliant | Meets EPA WaterSense℠ Standards | NSF Lead-Free Certified | ADA Compliant | UltraSeal™ | SecurePfit™

Raincan Showerhead

Model	Finish	Case Qty	List Price
973-228A	Polished Chrome	1	$91
973-228J	Brushed Nickel	1	$117
973-228B	Matte Black	1	$165

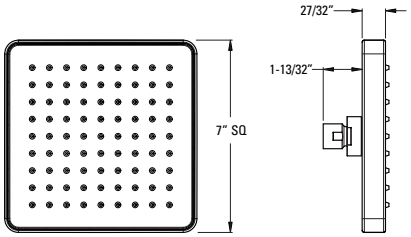

Technical Info

Features:
- Raincan Showerhead
- Easy To Clean Spray Nozzles
- Brass Ball Joint
- Shower Arm and Flange Sold Separately
- Order 941-Ø55Ø for 1.5 gpm Showerhead Insert
- Showerhead 1.8 gpm @ 80 psi

Shower Arm Flange

96Ø-Ø97A	Polished Chrome	1	$17
96Ø-Ø97J	Brushed Nickel	1	$21
96Ø-Ø97B	Matte Black	1	$19

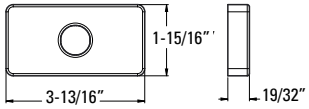

Features:
- All Metal
- Matches Kenzo Style & Finishes

Curved Shower Arm

973-Ø3ØA	Polished Chrome	1	$17
973-Ø3ØJ	Brushed Nickel	1	$18
973-Ø3ØB	Matte Black	1	$18

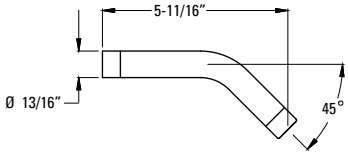

Features:
- Brass Shower Arm
- 1/2" NPT Male Connections

CEC Compliant | Cal Green Compliant | Meets EPA WaterSense℠ Standards | NSF Lead-Free Certified | ADA Compliant | UltraSeal™ | SecurePfit™

Tub Spout

Model	Finish	Case Qty	List Price
92Ø-623A	Polished Chrome	1	$94
92Ø-623J	Brushed Nickel	1	$107
92Ø-623B	Matte Black	1	$113

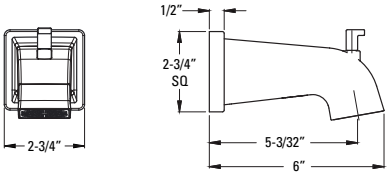

Technical Info

Features:
- All Metal
- IP & Quick Connect Diverted Spout

60" Hose

Model	Finish	Case Qty	List Price
951-335A	Polished Chrome	6	$47
951-335J	Brushed Nickel	6	$110
951-335B	Matte Black	6	$159

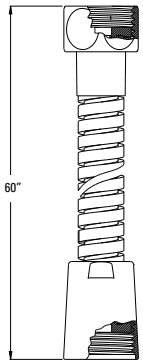

Features:
- 60" Anti-Twist Hose
- Matching Finish Metal Hose

Square Drop Elbow

Model	Finish	Case Qty	List Price
973-279A	Polished Chrome	8	$40
973-279J	Brushed Nickel	8	$61
973-279B	Matte Black	8	$85

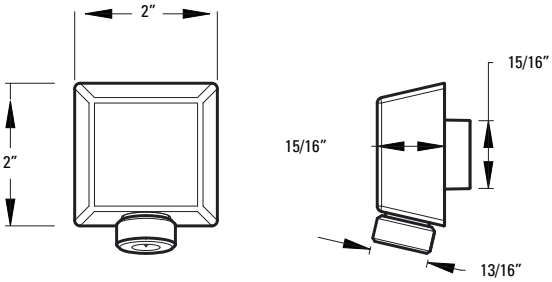

Features:
- 1/2" IP Connection
- Matching Finish

Kenzo™ - Accessories

18" Towel Bar

Model	Finish	Case Qty	List Price
BTB-DF1C	Polished Chrome	3	$119
BTB-DF1K	Brushed Nickel	3	$180
BTB-DF1B	Matte Black	3	$185

Technical Info

Holes: · 2-Hole

Features:
- Premium Metal Construction
- Superior Mounting Posts
- Concealed Screw Installation
- Mounting Hardware Included

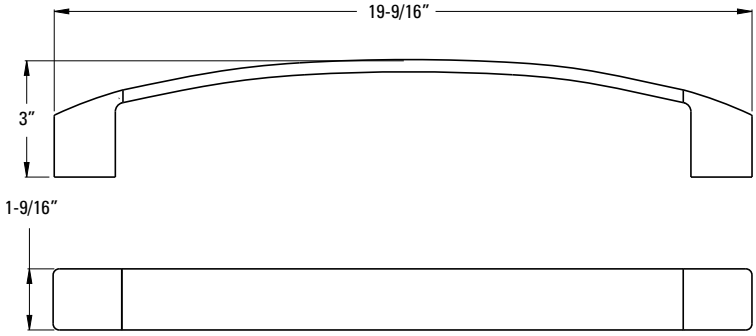

24" Towel Bar

BTB-DF2C	Polished Chrome	3	$146
BTB-DF2K	Brushed Nickel	3	$208
BTB-DF2B	Matte Black	3	$213

Holes: · 2-Hole

Features:
- Premium Metal Construction
- Superior Mounting Posts
- Concealed Screw Installation
- Mounting Hardware Included

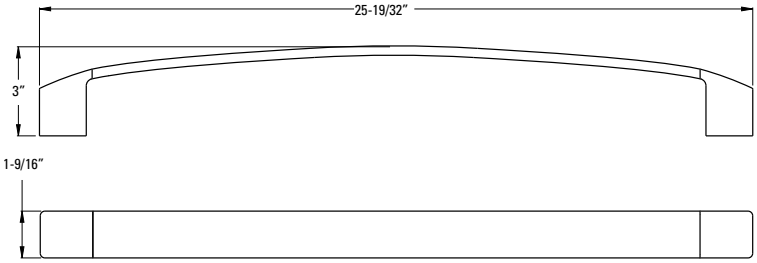

Towel Ring

BRB-DF1C	Polished Chrome	3	$112
BRB-DF1K	Brushed Nickel	3	$158
BRB-DF1B	Matte Black	3	$160

Holes: · 2-Hole

Features:
- Premium Metal Construction
- Superior Mounting Posts
- Concealed Screw Installation
- Mounting Hardware Included

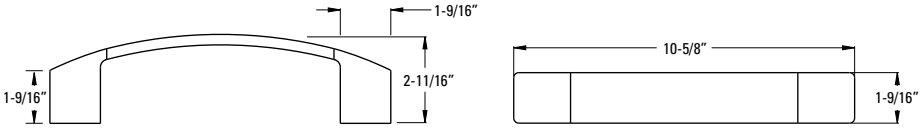

SHOWROOM PREFERRED

Paper Holder

Model	Finish	Case Qty	List Price
BPH-DF1C	Polished Chrome	3	$91
BPH-DF1K	Brushed Nickel	3	$131
BPH-DF1B	Matte Black	3	$132

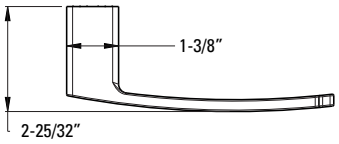

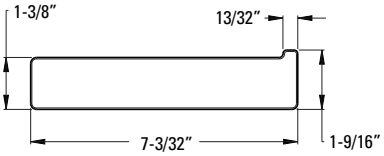

Technical Info

Holes: · 1-Hole

Features:
- Premium Metal Construction
- Superior Mounting Posts
- Concealed Screw Installation
- Mounting Hardware Included

Robe Hook

Model	Finish	Case Qty	List Price
BRH-DF1C	Polished Chrome	3	$70
BRH-DF1K	Brushed Nickel	3	$103
BRH-DF1B	Matte Black	3	$104

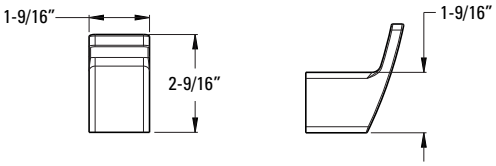

Holes: · 1-Hole

Features:
- Premium Metal Construction
- Superior Mounting Posts
- Concealed Screw Installation
- Mounting Hardware Included

Ashfield

Feel like you're roughing it without all the elbow grease. Ashfield is the sleek answer for sinks that just beg for a trough faucet. Fans of the rustic look find this stylized collection perfect for that beach or cabin vibe.

Single Control Vessel Lavatory
LG4Ø-YPØC

Single Control Lavatory
LG42-YPØC

8" Widespread Lavatory
LG49-YP1C

Diverter Trim
Ø16-YPØC

3-Hole Roman Tub
RT6-5YPC, HHL-YPLC

Tub & Shower
LG89-8YPC

Shower Only
LG89-7YPC

Accessories

24" Towel Bar
BTB-YP2C

24" Double Towel Bar
BTB-YP5C

Towel Hook
BRB-YPØC

Paper Holder
BPH-YP1C

Robe Hook
BRH-YPØC

Ashfield® - Lavatory Faucets

Single Control Vessel Lavatory

Model	Finish	Case Qty	List Price
LG4Ø-YPØC	Polished Chrome	3	$453
LG4Ø-YPØK	Brushed Nickel	3	$516
LG4Ø-YPØY	Tuscan Bronze	3	$550
LG4Ø-YPØU	Rustic Bronze	3	$542

Technical Info

Holes: · 1-Hole Installation

Features:
- Ceramic Disc Valve
- Metal Lever Handle
- Single Post Mounting Ring
- Grid Strainer Sold Separately
- 1.2 gpm @ 60 psi

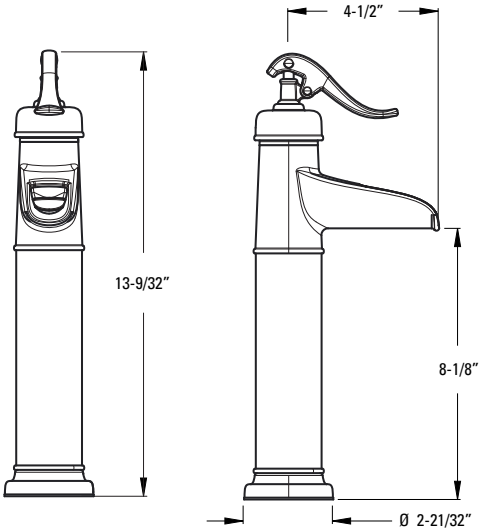

Single Control Lavatory

Model	Finish	Case Qty	List Price
LG42-YPØC	Polished Chrome	3	$340
LG42-YPØK	Brushed Nickel	3	$439
LG42-YPØY	Tuscan Bronze	3	$483
LG42-YPØU	Rustic Bronze	3	$470

Holes: · 1 or 3-Hole 4" Installation

Features:
- Ceramic Disc Valve
- Metal Lever Handle
- Single Post Mounting Ring
- 3-Hole Deckplate Included
- All Metal Pop-Up
- 1.2 gpm @ 60 psi

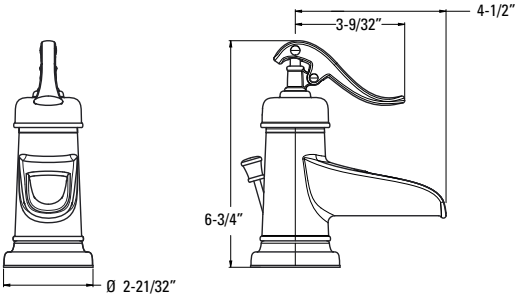

CEC Compliant · Cal Green Compliant · Meets EPA WaterSense℠ Standards · NSF Lead-Free Certified · ADA Compliant · UltraSeal™ · SecurePfit™

8" Widespread Lavatory

Model	Finish	Case Qty	List Price
LG49-YP1C	Polished Chrome	3	$483
LG49-YP1K	Brushed Nickel	3	$590
LG49-YP1Y	Tuscan Bronze	3	$660
LG49-YP1U	Rustic Bronze	3	$651

Technical Info

Holes: · 3-Hole 8-15" Installation

Features:
- Ceramic Disc Valves
- Metal Lever Handles
- Fixed Spout
- Quick Connect Hose Assembly
- All Metal Pop-Up
- Extension Kit Available 971-Ø86Ø
- 1.2 gpm @ 60 psi

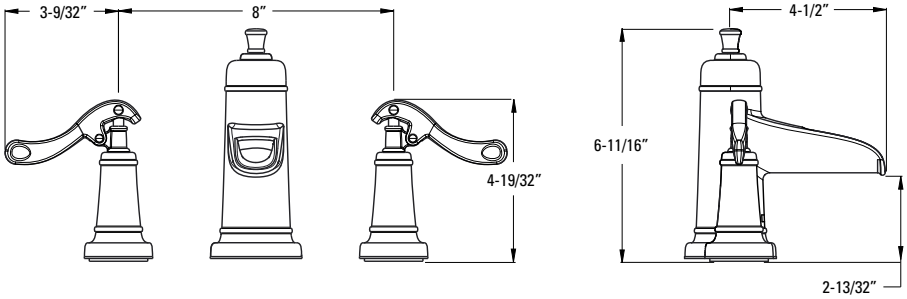

Grid Strainer

972-1Ø4A	Polished Chrome	6	$51
972-1Ø4J	Brushed Nickel	6	$59
972-1Ø4Y	Tuscan Bronze	6	$65
972-1Ø4U	Rustic Bronze	6	$72

Features:
- All Metal Grid Strainer
- With Overflow
- 1 1/4" Tailpiece

Grid Strainer

972-1Ø3A	Polished Chrome	6	$51
972-1Ø3J	Brushed Nickel	6	$59
972-1Ø3Y	Tuscan Bronze	6	$65
972-1Ø3U	Rustic Bronze	6	$72

Features:
- All Metal Grid Strainer
- No Overflow
- 1 1/4" Tailpiece

CEC Compliant · Cal Green Compliant · Meets EPA WaterSense℠ Standards · NSF Lead-Free Certified · ADA Compliant · UltraSeal™ · SecurePfit™

Ashfield® - Tub Fillers

Roman Tub Trim

Model	Finish	Case Qty	List Price
RT6-5YPC	Polished Chrome	3	$685
RT6-5YPK	Brushed Nickel	3	$901
RT6-5YPY	Tuscan Bronze	3	$955
RT6-5YPU	Rustic Bronze	3	$946

Technical Info

Holes: · 3-Hole

Features:
· Ceramic Disc Valves
· Fixed Spout
· Handles Sold Separately (HHL Kit)

Must Order ØX6-Ø5ØR or ØX6-15ØR Rough In Valve Separately. See Valve Section.

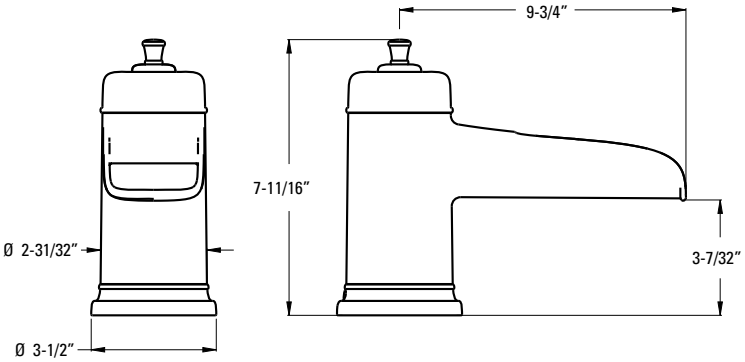

Handle Kit

HHL-YPLC	Polished Chrome	16	$92
HHL-YPLK	Brushed Nickel	16	$114
HHL-YPLY	Tuscan Bronze	16	$136
HHL-YPLU	Rustic Bronze	16	$127

Features:
· Metal Lever Handles
· Kit Includes 2 Handles
· For Lavatory and Roman Tub Applications

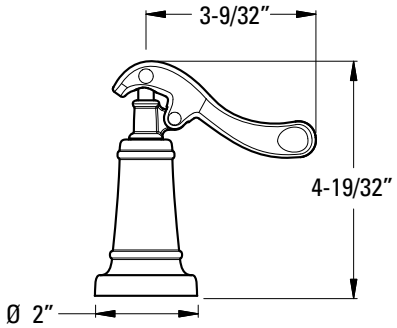

CEC Compliant · Cal Green Compliant · Meets EPA WaterSense℠ Standards · NSF Lead-Free Certified · ADA Compliant · UltraSeal™ · SecurePfit™

Pressure Balance Tub & Shower Trim

Model	Finish	Case Qty	List Price
LG89-8YPC	Polished Chrome	3	$273
LG89-8YPK	Brushed Nickel	3	$487
LG89-8YPY	Tuscan Bronze	3	$609
LG89-8YPU	Rustic Bronze	3	$602

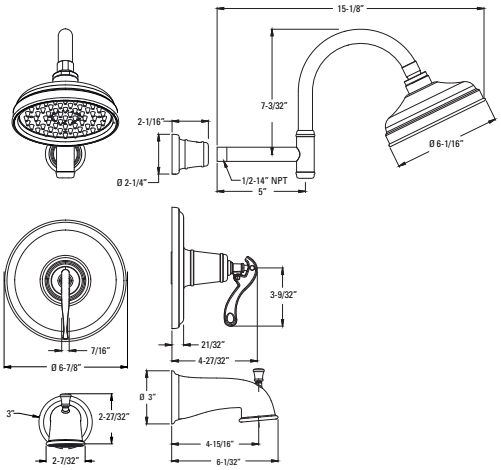

Technical Info

Features:
- SecurePfit™
- Metal Lever Handle
- Hot/Cold Indicator
- Decorative Raincan Showerhead
- Easy To Clean Spray Nozzles
- Quick Connect Metal Diverting Tub Spout
- Order 941-Ø55Ø for 1.5 gpm Showerhead Insert
- Showerhead 1.8 gpm @ 80 psi

Must Order Pressure Balance Rough In Valve Separately. See Valve Section.

Pressure Balance Shower Trim

LG89-7YPC	Polished Chrome	3	$214
LG89-7YPK	Brushed Nickel	3	$340
LG89-7YPY	Tuscan Bronze	3	$500
LG89-7YPU	Rustic Bronze	3	$562

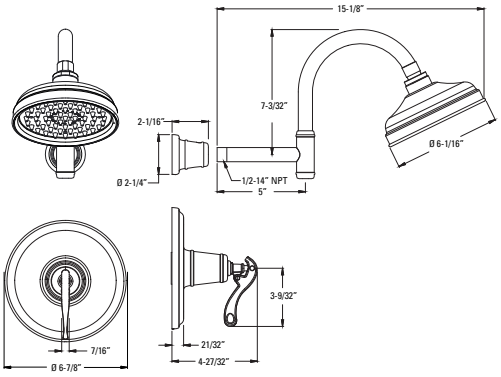

Features:
- SecurePfit™
- Metal Lever Handle
- Hot/Cold Indicator
- Decorative Raincan Showerhead
- Easy To Clean Spray Nozzles
- Order 941-Ø55Ø for 1.5 gpm Showerhead Insert
- Showerhead 1.8 gpm @ 80 psi

Must Order Pressure Balance Rough In Valve Separately. See Valve Section.

CEC Compliant | Cal Green Compliant | Meets EPA WaterSense℠ Standards | NSF Lead-Free Certified | ADA Compliant | UltraSeal™ | SecurePfit™

Pressure Balance Valve Only Trim

Model	Finish	Case Qty	List Price
R89-1YPC	Polished Chrome	3	$129
R89-1YPK	Brushed Nickel	3	$227
R89-1YPY	Tuscan Bronze	3	$298
R89-1YPU	Rustic Bronze	3	$334

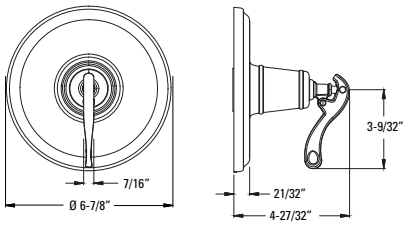

Technical Info

Features:
- SecurePfit™
- Metal Lever Handle
- Hot/Cold Indicator

Must Order Pressure Balance Rough In Valve Separately. See Valve Section.

Diverter Trim Only

Ø16-YPØC	Polished Chrome	3	$104
Ø16-YPØK	Brushed Nickel	3	$149
Ø16-YPØY	Tuscan Bronze	3	$219
Ø16-YPØU	Rustic Bronze	3	$228

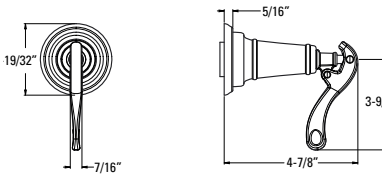

Features:
- SecurePfit™
- Metal Lever Handle and Matching Flange
- Can Be Used With Ø15-2WDX for Cal Green Compliant Applications

Must Order Ø15-4WDX or Ø15-2WDX Rough In Valve Separately. See Valve Section.

CEC Compliant | Cal Green Compliant | Meets EPA WaterSense℠ Standards | NSF Lead-Free Certified | ADA Compliant | UltraSeal™ | SecurePfit™

24" Towel Bar

Model	Finish	Case Qty	List Price
BTB-YP2C	Polished Chrome	4	$80
BTB-YP2K	Brushed Nickel	4	$122
BTB-YP2Y	Tuscan Bronze	4	$127
BTB-YP2U	Rustic Bronze	4	$127

Technical Info

Holes: · 2-Hole

Features:
- Premium Metal Construction
- Superior Mounting Posts
- Concealed Screw Installation
- Mounting Hardware Included

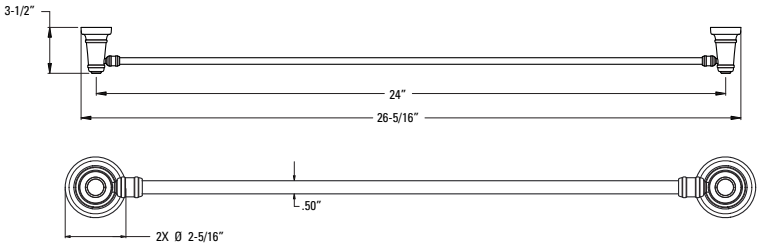

24" Double Towel Bar

Model	Finish	Case Qty	List Price
BTB-YP5C	Polished Chrome	4	$147
BTB-YP5K	Brushed Nickel	4	$223
BTB-YP5Y	Tuscan Bronze	4	$248
BTB-YP5U	Rustic Bronze	4	$223

Holes: · 2-Hole

Features:
- Premium Metal Construction
- Superior Mounting Posts
- Concealed Screw Installation
- Mounting Hardware Included

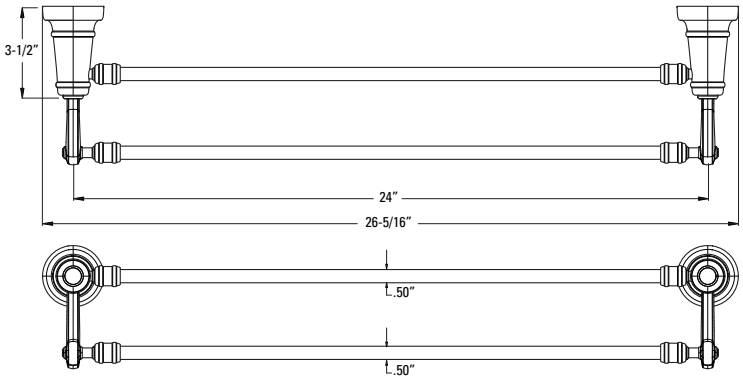

Ashfield® - Accessories

Towel Hook

Model	Finish	Case Qty	List Price
BRB-YPØC	Polished Chrome	4	$58
BRB-YPØK	Brushed Nickel	4	$87
BRB-YPØY	Tuscan Bronze	4	$92
BRB-YPØU	Rustic Bronze	4	$92

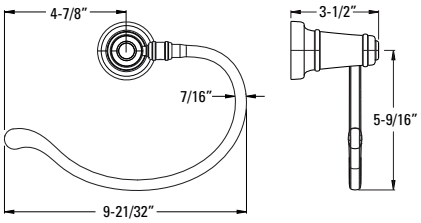

Technical Info

Holes: · 1-Hole

Features:
· Premium Metal Construction
· Superior Mounting Posts
· Concealed Screw Installation
· Mounting Hardware Included

Paper Holder

BPH-YP1C	Polished Chrome	4	$64
BPH-YP1K	Brushed Nickel	4	$93
BPH-YP1Y	Tuscan Bronze	4	$94
BPH-YP1U	Rustic Bronze	4	$114

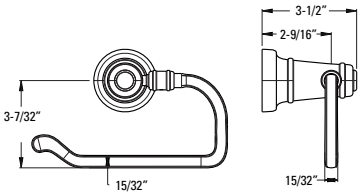

Holes: · 1-Hole

Features:
· Premium Metal Construction
· Superior Mounting Posts
· Concealed Screw Installation
· Mounting Hardware Included

Robe Hook

BRH-YPØC	Polished Chrome	4	$37
BRH-YPØK	Brushed Nickel	4	$52
BRH-YPØY	Tuscan Bronze	4	$60
BRH-YPØU	Rustic Bronze	4	$55

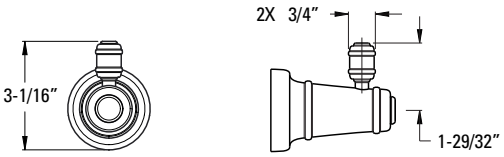

Holes: · 1-Hole

Features:
· Premium Metal Construction
· Superior Mounting Posts
· Concealed Screw Installation
· Mounting Hardware Included

Arterra

The Arterra Collection displays its classic lines without being too ornate. This allows the family to fit both a traditional styled interior and/or contemporary one. The faceted surfaces allow for a bold look that's not overpowering. This family was designed to slightly modernize the look of a more traditional bathroom while adding a classic twist to a more contemporary one.

Single Control Vessel Lavatory
LG4Ø-DEØC

Single Control Lavatory
LG42-DEØC

8" Widespread Lavatory
LG49-DEØC

3-Hole Roman Tub
RT6-5DEC

4-Hole Roman Tub
LG6-4DEC

Diverter Trim
Ø16-DE1C

Tub & Shower
LG89-8DEC
Shower Only
LG89-7DEC
Valve Only
R89-1DEC

Slide Bar/
Hand Shower Kit
LG16-3DEC

Accessories

18" & 24" Towel Bar
BTB-DE1C & BTB-DE2C

Towel Ring
BRB-DEØC

Paper Holder
BPH-DEØC

Robe Hook
BRH-DEØC

Single Control Vessel Lavatory

Model	Finish	Case Qty	List Price
LG4Ø-DEØC	Polished Chrome	3	$380
LG4Ø-DEØK	Brushed Nickel	3	$511
LG4Ø-DEØD	Polished Nickel	3	$511
LG4Ø-DEØY	Tuscan Bronze	3	$524

Technical Info

Holes: · 1-Hole Installation

Features:
- Ceramic Disc Valve
- Metal Lever Handle
- Single Post Mounting Ring
- Grid Strainer Sold Separately
- 1.2 gpm @ 60 psi

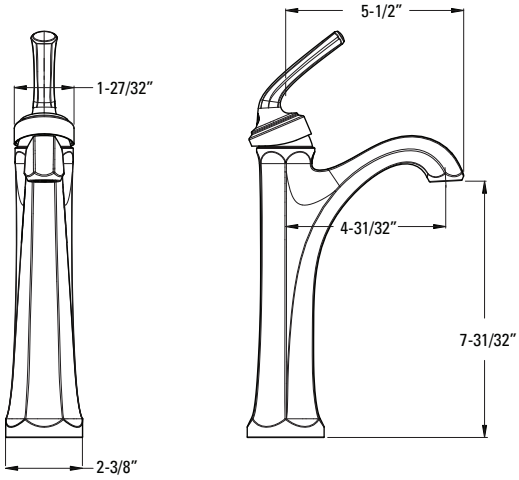

Single Control Lavatory

LG42-DEØC	Polished Chrome	3	$297
LG42-DEØK	Brushed Nickel	3	$417
LG42-DEØD	Polished Nickel	3	$417
LG42-DEØY	Tuscan Bronze	3	$439

Holes: · 1 or 3-Hole 4" Installation

Features:
- Ceramic Disc Valve
- Metal Lever Handle
- Single Post Mounting Ring
- 3-Hole Deckplate Sold Separately 961-146* and 974-148*
- All Metal Pop-Up
- 1.2 gpm @ 60 psi

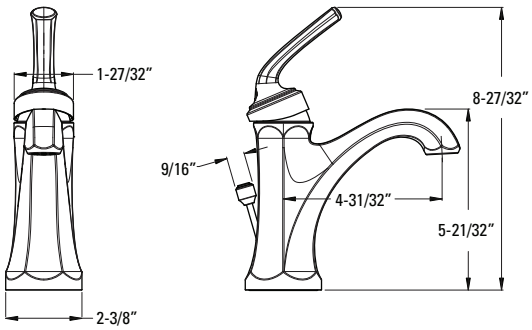

CEC Compliant · Cal Green Compliant · Meets EPA WaterSense℠ Standards · NSF Lead-Free Certified · ADA Compliant · UltraSeal™ · SecurePfit™

SHOWROOM PREFERRED

8" Widespread Lavatory

Model	Finish	Case Qty	List Price
LG49-DEØC	Polished Chrome	3	$397
LG49-DEØK	Brushed Nickel	3	$500
LG49-DEØD	Polished Nickel	3	$500
LG49-DEØY	Tuscan Bronze	3	$553

Technical Info

Holes: · 3-Hole 8-15" Installation

Features:
- Ceramic Disc Valves
- Metal Lever Handles
- Fixed Spout
- Quick Connect Hose Assembly
- All Metal Pop-Up
- 1.2 gpm @ 60 psi

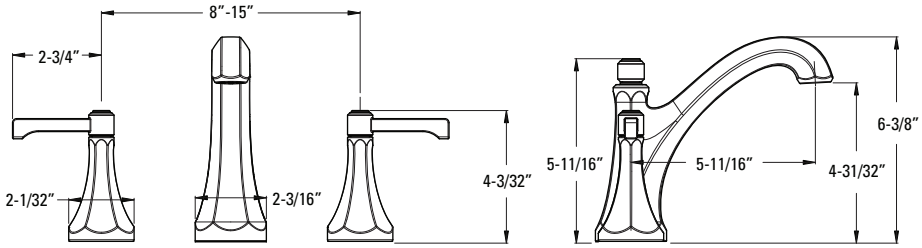

Universal Grid Strainer

972-1Ø4A	Polished Chrome	6	$51
972-1Ø4J	Brushed Nickel	6	$59
972-1Ø4D	Polished Nickel	6	$59
972-1Ø4Y	Tuscan Bronze	6	$65

Features:
- All Metal Grid Strainer
- With Overflow
- 1 1/4" Tailpiece

Universal Grid Strainer

972-1Ø3A	Polished Chrome	6	$51
972-1Ø3J	Brushed Nickel	6	$59
972-1Ø3D	Polished Nickel	6	$59
972-1Ø3Y	Tuscan Bronze	6	$65

Features:
- All Metal Grid Strainer
- No Overflow
- 1 1/4" Tailpiece

CEC Compliant · Cal Green Compliant · Meets EPA WaterSense℠ Standards · NSF Lead-Free Certified · ADA Compliant · UltraSeal™ · SecurePfit™

Roman Tub Trim

Model	Finish	Case Qty	List Price
RT6-5DEC	Polished Chrome	3	$457
RT6-5DEK	Brushed Nickel	3	$564
RT6-5DED	Polished Nickel	3	$564
RT6-5DEY	Tuscan Bronze	3	$612

Technical Info

Holes: · 3-Hole

Features: · Ceramic Disc Valves
· Fixed Spout

Must Order ØX6-Ø5ØR or ØX6-15ØR Rough In Valve Separately. See Valve Section.

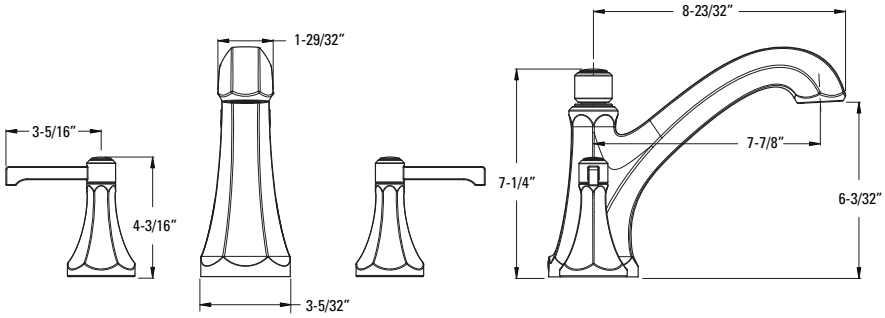

Roman Tub Trim with Hand Shower

LG6-4DEC	Polished Chrome	3	$589
LG6-4DEK	Brushed Nickel	3	$683
LG6-4DED	Polished Nickel	3	$683
LG6-4DEY	Tuscan Bronze	3	$733

Holes: · 4-Hole

Features: · Ceramic Disc Valves
· Fixed Spout
· Hand Shower 1.8 gpm @ 80psi

Must Order ØX6-44ØR Rough In Valve Separately. See Valve Section.

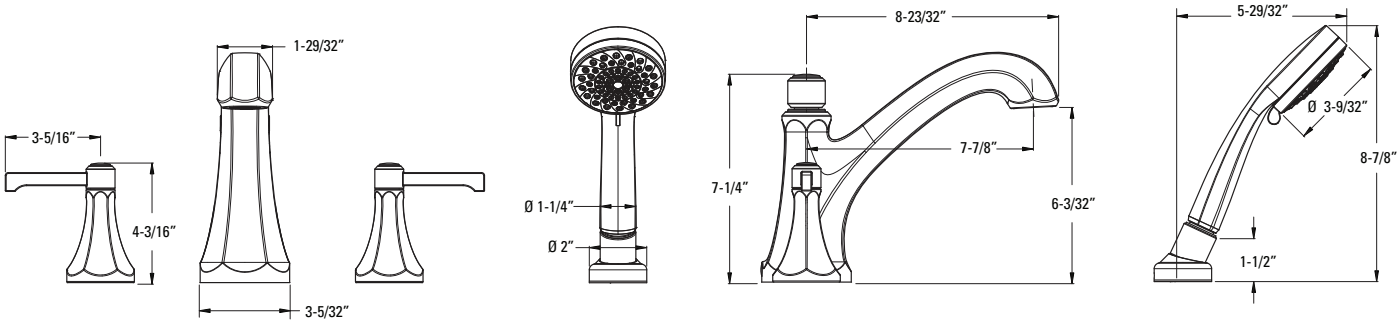

CEC Compliant · Cal Green Compliant · Meets EPA WaterSense℠ Standards · NSF Lead-Free Certified · ADA Compliant · UltraSeal™ · SecurePfit™

Pressure Balance Tub & Shower Trim

Model	Finish	Case Qty	List Price
LG89-8DEC	Polished Chrome	3	$380
LG89-8DEK	Brushed Nickel	3	$470
LG89-8DED	Polished Nickel	3	$470
LG89-8DEY	Tuscan Bronze	3	$530

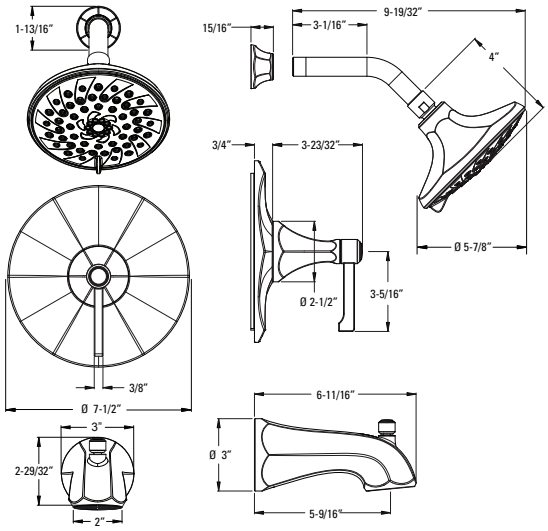

Technical Info

Features:
- SecurePfit™
- Metal Lever Handle
- Hot/Cold Indicator
- Decorative 5-Function Showerhead
- Easy To Clean Spray Nozzles
- Quick Connect Metal Diverting Tub Spout
- Order 941-Ø55 for 1.5 gpm Showerhead Insert
- Showerhead 1.8 gpm @ 80 psi

Must Order Pressure Balance Rough in Valve Separately. See Valve Section.

Pressure Balance Shower Trim

LG89-7DEC	Polished Chrome	3	$296
LG89-7DEK	Brushed Nickel	3	$380
LG89-7DED	Polished Nickel	3	$380
LG89-7DEY	Tuscan Bronze	3	$452

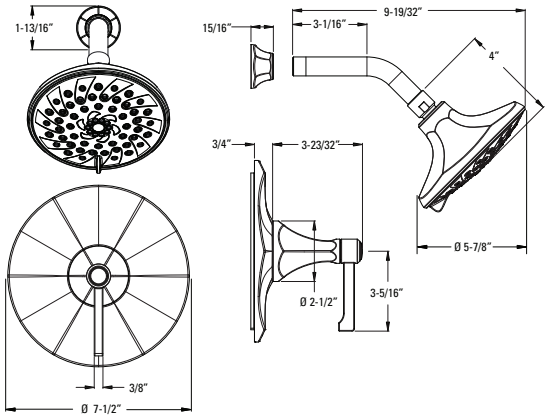

Features:
- SecurePfitTM
- Metal Lever Handle
- Hot/Cold Indicator
- Decorative 5-Function Showerhead
- Easy To Clean Spray Nozzles
- Order 941-Ø55 for 1.5 gpm Showerhead Insert
- Showerhead 1.8 gpm @ 80 psi

Must Order Pressure Balance Rough in Valve Separately. See Valve Section.

CEC Compliant | Cal Green Compliant | Meets EPA WaterSense℠ Standards | NSF Lead-Free Certified | ADA Compliant | UltraSeal™ | SecurePfit™

Pressure Balance Valve Only Trim

Model	Finish	Case Qty	List Price
R89-1DEC	Polished Chrome	3	$167
R89-1DEK	Brushed Nickel	3	$218
R89-1DED	Polished Nickel	3	$218
R89-1DEY	Tuscan Bronze	3	$253

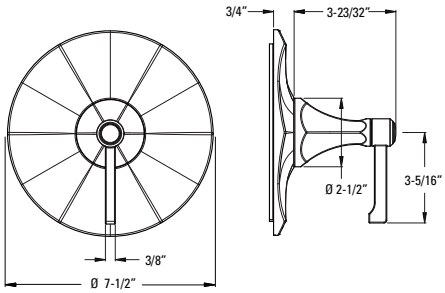

Technical Info

Features:
- SecurePfit™
- Metal Lever Handle
- Hot/Cold Indicator

Must Order Pressure Balance Rough in Valve Separately. See Valve Section.

Diverter Trim Only

Ø16-DE1C	Polished Chrome	3	$126
Ø16-DE1K	Brushed Nickel	3	$148
Ø16-DE1D	Polished Nickel	3	$148
Ø16-DE1Y	Tuscan Bronze	3	$171

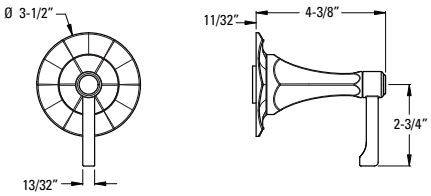

Features:
- SecurePfit™
- Metal Lever Handle and Matching Flange
- Can Be Used With Ø15-2WDX for Cal Green Compliant Applications

Must Order Ø15-4WDX or Ø15-2WDX Rough In Valve Separately. See Valve Section.

CEC Compliant | Cal Green Compliant | Meets EPA WaterSense℠ Standards | NSF Lead-Free Certified | ADA Compliant | UltraSeal™ | SecurePfit™

SHOWROOM PREFERRED

Slide Bar/Hand Shower Kit

Model	Finish	Case Qty	List Price
LG16-3DEC	Polished Chrome	3	$356
LG16-3DEK	Brushed Nickel	3	$475
LG16-3DED	Polished Nickel	3	$475
LG16-3DEY	Tuscan Bronze	3	$560

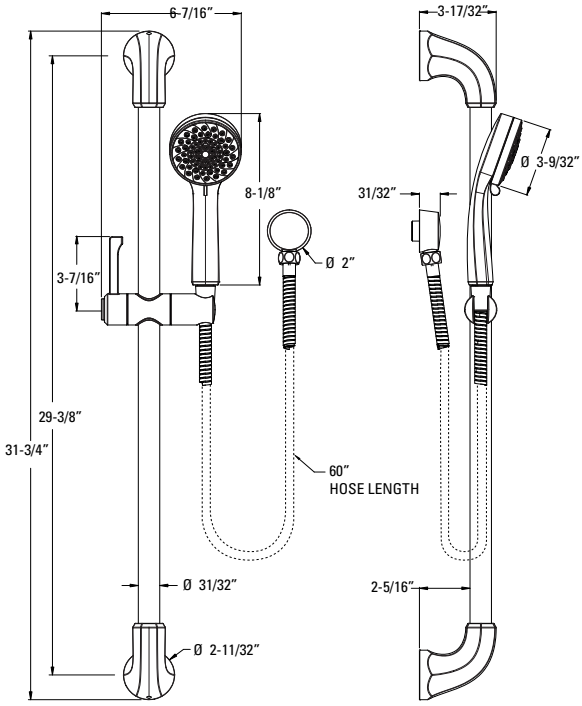

Technical Info

Features:

- Complete Slide Bar Package with Hand Shower, Hose, Drop Elbow, and Slide Bar
- Multi-Function Handheld
- Easy To Clean Spray Nozzles
- All Metal Slide Bar
- Metal Hose with Matching Finish
- Back Flow Prevention
- Works with Arterra Diverter Trim and Valve
- Not to be Used as a Grab Bar
- Hand Shower 1.8 gpm @ 80 psi

18" Towel Bar

Model	Finish	Case Qty	List Price
BTB-DE1C	Polished Chrome	3	$101
BTB-DE1K	Brushed Nickel	3	$113
BTB-DE1D	Polished Nickel	3	$113
BTB-DE1Y	Tuscan Bronze	3	$129

Technical Info

Holes: · 2-Hole

Features:
· Premium Metal Construction
· Superior Mounting Posts
· Concealed Screw Installation
· Mounting Hardware Included

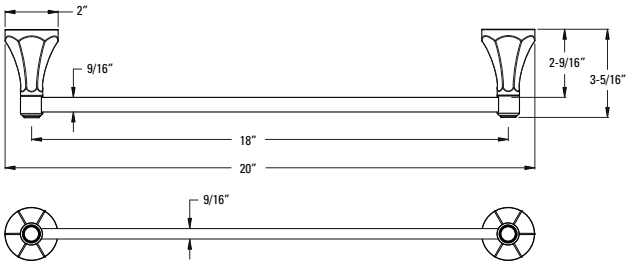

24" Towel Bar

Model	Finish	Case Qty	List Price
BTB-DE2C	Polished Chrome	3	$116
BTB-DE2K	Brushed Nickel	3	$129
BTB-DE2D	Polished Nickel	3	$129
BTB-DE2Y	Tuscan Bronze	3	$148

Holes: · 2-Hole

Features:
· Premium Metal Construction
· Superior Mounting Posts
· Concealed Screw Installation
· Mounting Hardware Included

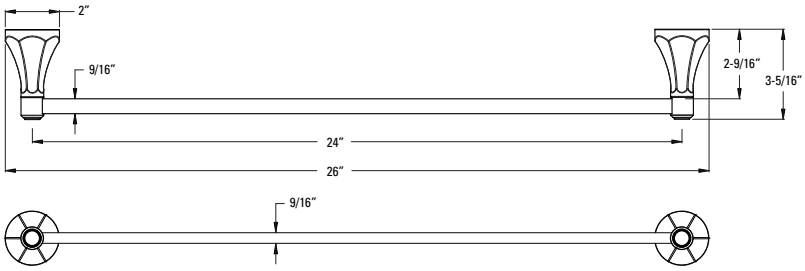

Towel Hook

Model	Finish	Case Qty	List Price
BRB-DEØC	Polished Chrome	3	$77
BRB-DEØK	Brushed Nickel	3	$94
BRB-DEØD	Polished Nickel	3	$94
BRB-DEØY	Tuscan Bronze	3	$108

Holes: · 1-Hole

Features:
· Premium Metal Construction
· Superior Mounting Posts
· Concealed Screw Installation
· Mounting Hardware Included

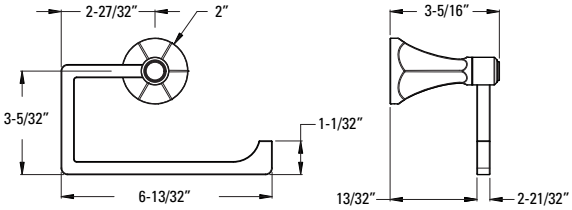

SHOWROOM PREFERRED

Paper Holder

Model	Finish	Case Qty	List Price
BPH-DEØC	Polished Chrome	3	$77
BPH-DEØK	Brushed Nickel	3	$94
BPH-DEØD	Polished Nickel	3	$94
BPH-DEØY	Tuscan Bronze	3	$110

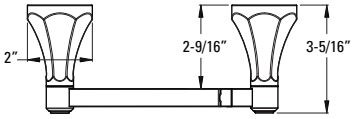

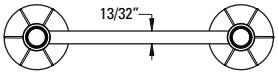

Technical Info

Holes: · 2-Hole

Features:
- Premium Metal Construction
- Superior Mounting Posts
- Concealed Screw Installation
- Mounting Hardware Included
- Swivel Mount Paper Holder

Robe Hook

BRH-DEØC	Polished Chrome	3	$41
BRH-DEØK	Brushed Nickel	3	$46
BRH-DEØD	Polished Nickel	3	$46
BRH-DEØY	Tuscan Bronze	3	$52

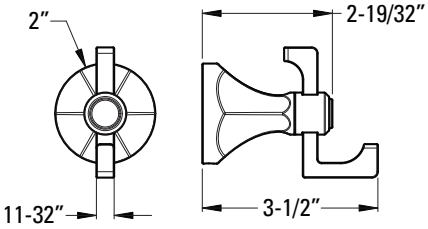

Holes: · 1-Hole

Features:
- Premium Metal Construction
- Superior Mounting Posts
- Concealed Screw Installation
- Mounting Hardware Included

Marielle

A touch of old world craftsmanship is artfully reflected in the Marielle® bathroom collection. This traditional French Country design is highlighted by a high-arc spout and two conical handles. The unique lavatory faucet can be installed as either a traditional centerset or mini-widespread faucet.

4" Mini-Widespread
LG46-MØBC

8" Widespread Lavatory
LG49-MØBC

3-Hole Roman Tub
RT6-5MXC, HHL-MØBC

Diverter Trim
Ø16-MBØC

Tub & Shower
LG89-8MBC
Shower Only
LG89-7MBC
Valve Only
R89-1MBC

Accessories

18" & 24" Towel Bar
BTB-MB1C & BTB-MB2C

Towel Hook
BRB-MB1C

Paper Holder
BPH-MB1C

Robe Hook
BRH-MB1C

4" Centerset/Mini-Widespread Lavatory

Model	Finish	Case Qty	List Price
LG46-MØBC	Polished Chrome	3	$335
LG46-MØBK	Brushed Nickel	3	$448
LG46-MØBY	Tuscan Bronze	3	$481

Technical Info

Holes: · 3-Hole 4" Installation

Features:
- Ceramic Disc Valves
- Metal Lever Handles
- Fixed Spout
- 3-Hole Deckplate
- Install without Deckplate for Mini-Widespread Appearance
- All Metal Pop-Up
- 1.2 gpm @ 60 psi

4" Centerset

4" Mini-Widespread

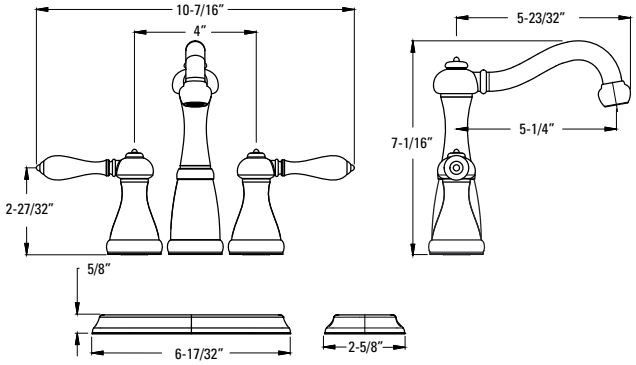

8" Widespread Lavatory

Model	Finish	Case Qty	List Price
LG49-MØBC	Polished Chrome	3	$458
LG49-MØBK	Brushed Nickel	3	$591
LG49-MØBY	Tuscan Bronze	3	$629

Holes: · 3-Hole 8-15" Installation

Features:
- Ceramic Disc Valves
- Metal Lever Handles
- Fixed Spout
- Quick Connect Hose Assembly
- All Metal Pop-Up
- Order 971-Ø86Ø to Increase Max. Install Depth to 3"
- 1.2 gpm @ 60 psi

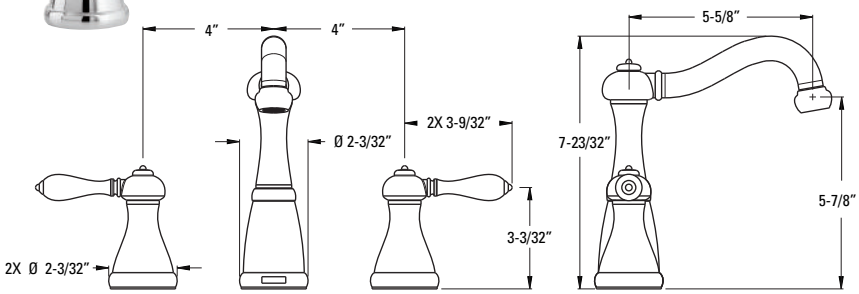

CEC Compliant · Cal Green Compliant · Meets EPA WaterSenseSM Standards · NSF Lead-Free Certified · ADA Compliant · UltraSeal™ · SecurePfit™

SHOWROOM PREFERRED

Roman Tub Trim

Model	Finish	Case Qty	List Price
RT6-5MXC	Polished Chrome	3	$399
RT6-5MXK	Brushed Nickel	3	$594
RT6-5MXY	Tuscan Bronze	3	$672

Technical Info

Holes: · 3-Hole

Features:
- Ceramic Disc Valves
- Fixed Spout
- Handles Sold Separately (HHL Kit)

Must Order ØX6-Ø5ØR or ØX6-15ØR Rough In Valve Separately. See Valve Section.

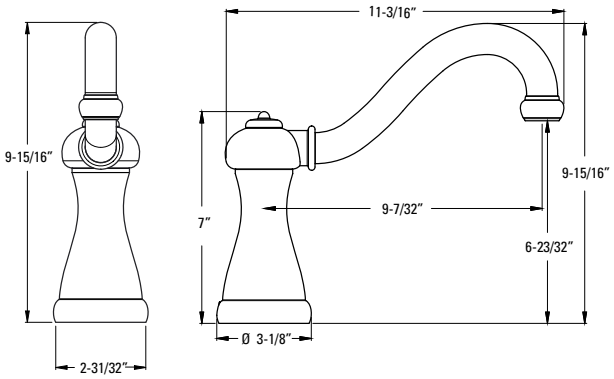

Handle Kit

HHL-MØBC	Polished Chrome	16	$77
HHL-MØBK	Brushed Nickel	16	$116
HHL-MØBY	Tuscan Bronze	16	$135

Features:
- Metal Lever Handles
- Kit Includes 2 Handles
- For Lavatory and Roman Tub Applications

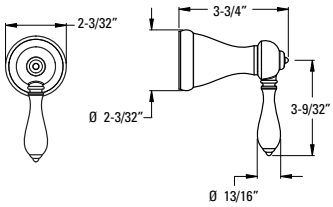

CEC Compliant | Cal Green Compliant | Meets EPA WaterSenseSM Standards | NSF Lead-Free Certified | ADA Compliant | UltraSeal™ | SecurePfit™

Pressure Balance Tub & Shower Trim

Model	Finish	Case Qty	List Price
LG89-8MBC	Polished Chrome	3	$240
LG89-8MBK	Brushed Nickel	3	$405
LG89-8MBY	Tuscan Bronze	3	$437

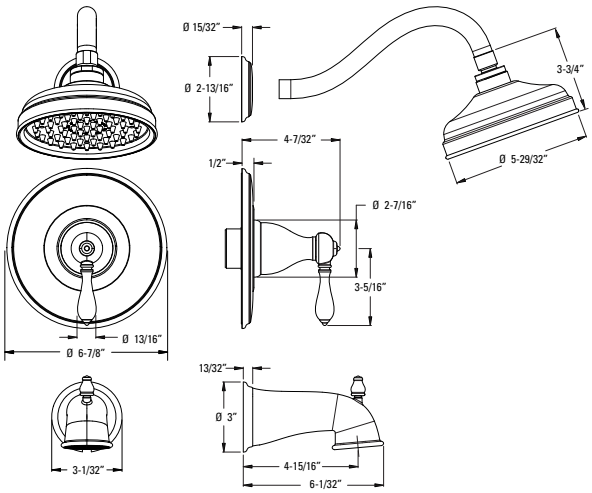

Technical Info

Features:
- SecurePfit™
- Metal Lever Handle
- Hot/Cold Indicator
- Decorative Raincan Showerhead
- Easy To Clean Spray Nozzles
- Quick Connect Metal Diverting Tub Spout
- Order 941-Ø55Ø for 1.5 gpm Showerhead Insert
- Showerhead 1.8 gpm @ 80 psi

Must Order Pressure Balance Rough In Valve Separately. See Valve Section.

Pressure Balance Shower Trim

LG89-7MBC	Polished Chrome	3	$168
LG89-7MBK	Brushed Nickel	3	$355
LG89-7MBY	Tuscan Bronze	3	$376

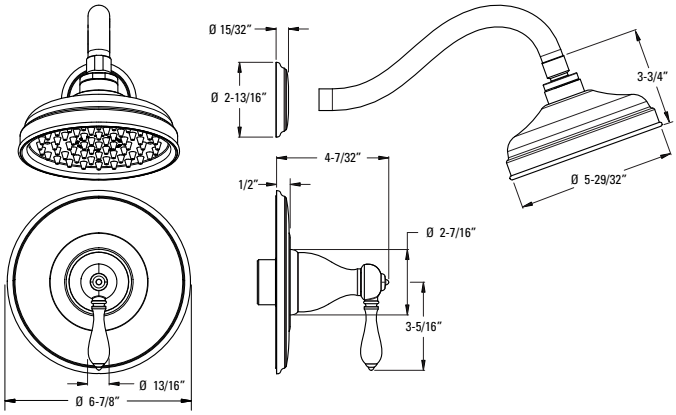

Features:
- SecurePfit™
- Metal Lever Handle
- Hot/Cold Indicator
- Decorative Raincan Showerhead
- Easy To Clean Spray Nozzles
- Order 941-Ø55Ø for 1.5 gpm Showerhead Insert
- Showerhead 1.8 gpm @ 80 psi

Must Order Pressure Balance Rough In Valve Separately. See Valve Section.

Pressure Balance Valve Only Trim

Model	Finish	Case Qty	List Price
R89-1MBC	Polished Chrome	3	$112
R89-1MBK	Brushed Nickel	3	$208
R89-1MBY	Tuscan Bronze	3	$246

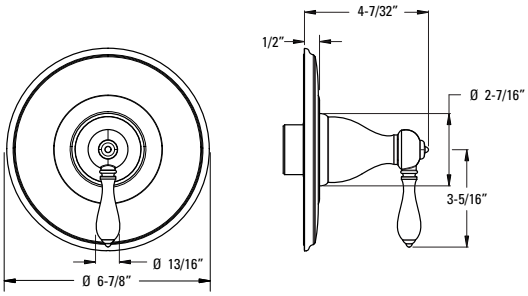

Technical Info

Features:
- SecurePfit™
- Metal Lever Handle
- Hot/Cold Indicator

Must Order Pressure Balance Rough In Valve Separately. See Valve Section.

Diverter Trim Only

Ø16-MBØC	Polished Chrome	3	$103
Ø16-MBØK	Brushed Nickel	3	$144
Ø16-MBØY	Tuscan Bronze	3	$212

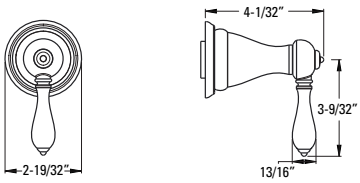

Features:
- SecurePfit™
- Metal Lever Handle and Matching Flange
- Can Be Used with Ø15-2WDX for Cal Green Compliant Applications

Must Order Ø15-4WDX or Ø15-2WDX Rough In Valve Separately. See Valve Section.

18" Towel Bar

Model	Finish	Case Qty	List Price
BTB-MB1C	Polished Chrome	3	$74
BTB-MB1K	Brushed Nickel	3	$88
BTB-MB1Y	Tuscan Bronze	3	$104

Technical Info

Holes: · 2-Hole

Features:
- Premium Metal Construction
- Standard Mounting Posts
- Concealed Screw Installation
- Mounting Hardware Included

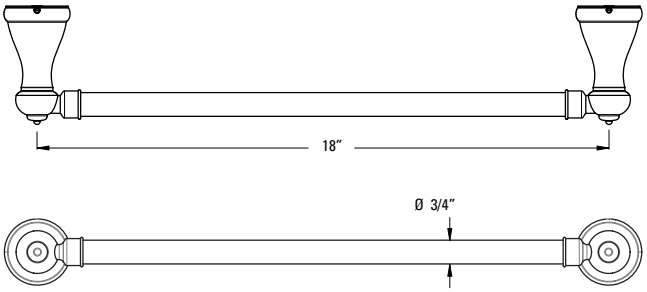

24" Towel Bar

Model	Finish	Case Qty	List Price
BTB-MB2C	Polished Chrome	3	$103
BTB-MB2K	Brushed Nickel	3	$115
BTB-MB2Y	Tuscan Bronze	3	$131

Holes: · 2-Hole

Features:
- Premium Metal Construction
- Standard Mounting Posts
- Concealed Screw Installation
- Mounting Hardware Included

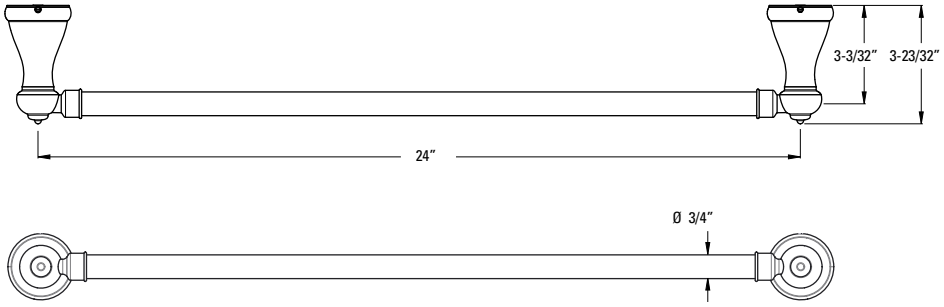

Towel Ring

Model	Finish	Case Qty	List Price
BRB-MB1C	Polished Chrome	3	$53
BRB-MB1K	Brushed Nickel	3	$66
BRB-MB1Y	Tuscan Bronze	3	$81

Holes: · 1-Hole

Features:
- Premium Metal Construction
- Standard Mounting Posts
- Concealed Screw Installation
- Mounting Hardware Included

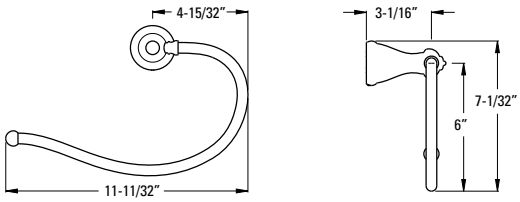

Paper Holder

Model	Finish	Case Qty	List Price
BPH-MB1C	Polished Chrome	3	$63
BPH-MB1K	Brushed Nickel	3	$76
BPH-MB1Y	Tuscan Bronze	3	$84

Technical Info

Holes: · 2-Hole

Features:
- Premium Metal Construction
- Standard Mounting Posts
- Concealed Screw Installation
- Mounting Hardware Included
- Swivel Mount Paper Holder

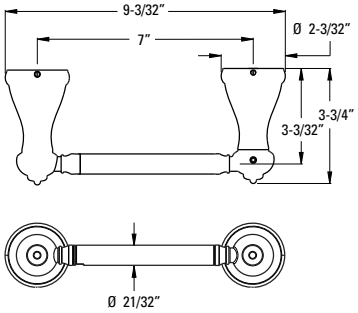

Robe Hook

Model	Finish	Case Qty	List Price
BRH-MB1C	Polished Chrome	3	$32
BRH-MB1K	Brushed Nickel	3	$47
BRH-MB1Y	Tuscan Bronze	3	$61

Holes: · 1-Hole

Features:
- Premium Metal Construction
- Standard Mounting Posts
- Concealed Screw Installation
- Mounting Hardware Included

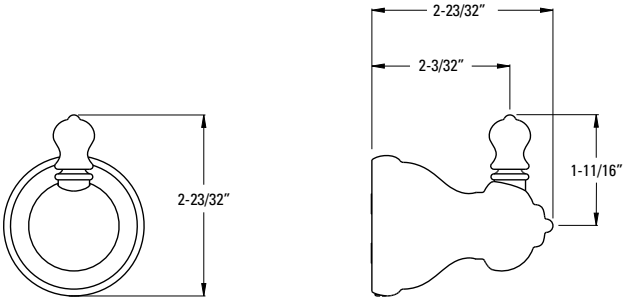

Contempra

This is the faucet that collects compliments by the handful. Contempra looks oh-so-clean that it can go mod or retro, for those of you who like to mix and match. If you've got a Mid-Century heart and an eye for quality, this is your shiny new sweet spot.

SHOWROOM PREFERRED

Single Control Vessel Lavatory
LG4Ø-NCØØ

Single Control Lavatory
LG42-NCØØ

8" Widespread Lavatory
LG49-NC1C

3-Hole Roman Tub
RT6-5NCC

Tub & Shower
LG89-8NCC

Shower Only
LG89-7NCC

Valve Only
R89-1NCC

Diverter Trim
Ø16-NC1C

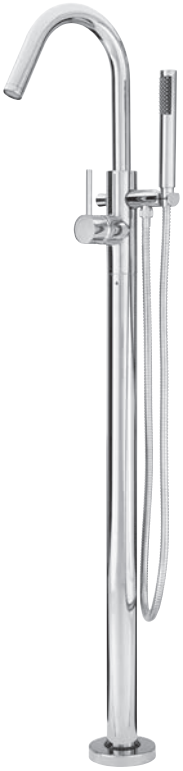

Free-Standing Tub Filler with Hand Shower
LG6-1MFC

Accessories

18" & 24" Towel Bar
BTB-NC1C & BTB-NC2C

Towel Ring
BRB-NC1C

Paper Holder
BPH-NC1C

Robe Hook
BRH-NC1C

Single Control Vessel Lavatory

Model	Finish	Case Qty	List Price
LG4Ø-NCØØ	Polished Chrome	3	$389
LG4Ø-NKØØ	Brushed Nickel	3	$519
LG4Ø-NBØØ	Matte Black	3	$583
LG4Ø-NBGØØ	Brushed Gold	3	$706

Technical Info

Holes: · 1-Hole installation

Features:
- Ceramic Disc Valve
- Metal Lever Handle
- Single Post Mounting Ring
- Grid Strainer Sold Separately
- Hot/Cold Indicator
- 1.2 gpm @ 60 psi

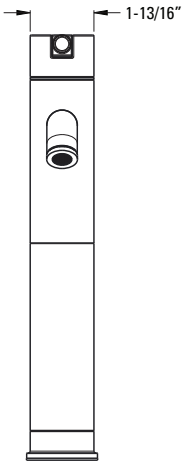

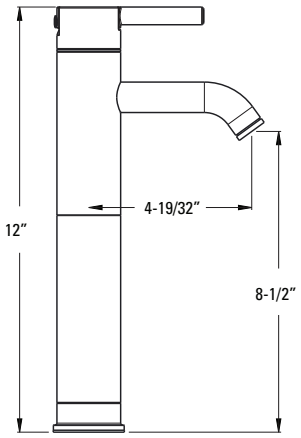

Single Control Lavatory

LG42-NCØØ	Polished Chrome	3	$303
LG42-NKØØ	Brushed Nickel	3	$432
LG42-NBØØ	Matte Black	3	$456
LG42-NBGØØ	Brushed Gold	3	$552

Holes: · 1 or 3-Hole 4" Installation

Features:
- Ceramic Disc Valve
- Metal Lever Handle
- Single Post Mounting Ring
- 3-Hole Deckplate Sold Separately 961-Ø95*
- All Metal Pop-Up
- Hot/Cold Indicator
- 1.2 gpm @ 60 psi

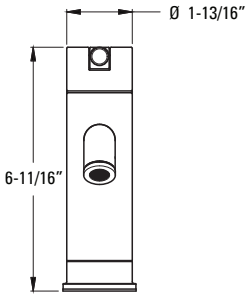

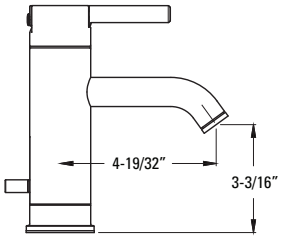

CEC Compliant · Cal Green Compliant · Meets EPA WaterSenseSM Standards · NSF Lead-Free Certified · ADA Compliant · UltraSeal™ · SecurePfit™

SHOWROOM PREFERRED

8" Widespread Lavatory

Model	Finish	Case Qty	List Price
LG49-NC1C	Polished Chrome	3	$385
LG49-NC1K	Brushed Nickel	3	$448
LG49-NC1B	Matte Black	3	$577
LG49-NC1BG	Brushed Gold	3	$700

Technical Info

Holes: · 3-Hole 8-15" Installation

Features:
- Ceramic Disc Valves
- Metal Lever Handles
- High Arc Spout
- Quick Connect Hose Assembly
- All Metal Pop-Up
- Order 971-Ø86Ø to Increase Max. Install Depth to 3"
- 1.2 gpm @ 60 psi

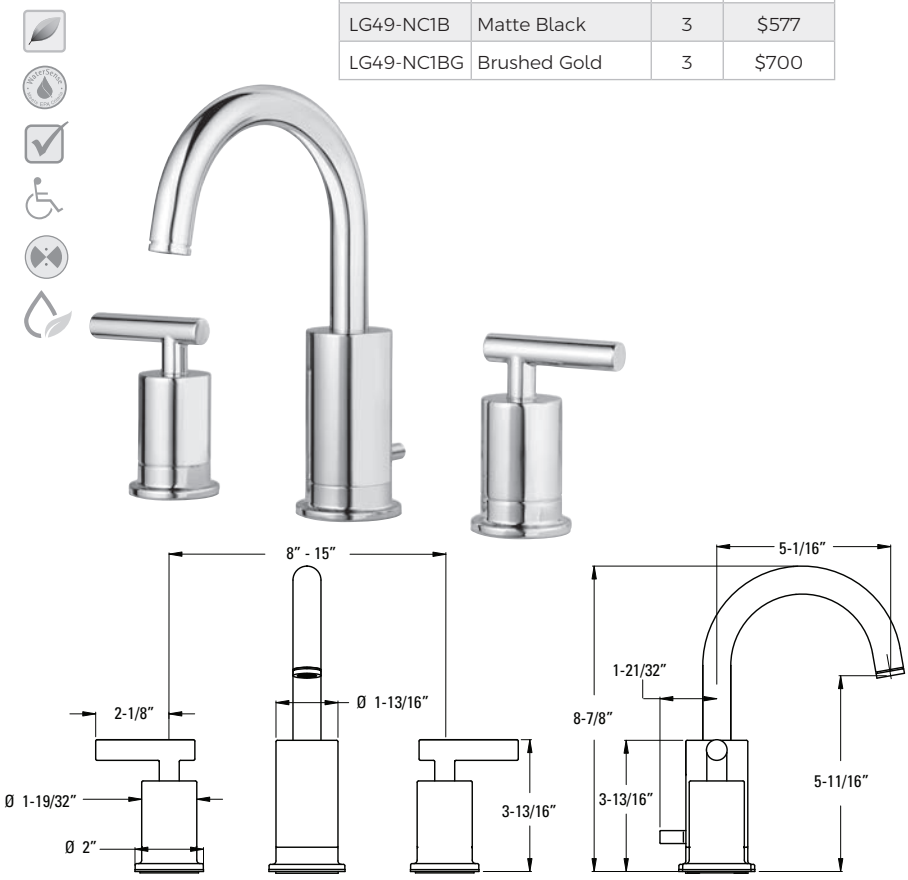

Universal Grid Strainer

972-1Ø4A	Polished Chrome	6	$51
972-1Ø4J	Brushed Nickel	6	$59
972-1Ø4B	Matte Black	6	$66
972-1Ø4BG	Brushed Gold	6	$88

Features:
- All Metal Grid Strainer
- With Overflow
- 1 1/4" Tailpiece

Universal Grid Strainer

972-1Ø3A	Polished Chrome	6	$51
972-1Ø3J	Brushed Nickel	6	$59
972-1Ø3B	Matte Black	6	$66
972-1Ø3BG	Brushed Gold	6	$88

Features:
- All Metal Grid Strainer
- No Overflow
- 1 1/4" Tailpiece

CEC Compliant | Cal Green Compliant | Meets EPA WaterSenseSM Standards | NSF Lead-Free Certified | ADA Compliant | UltraSeal™ | SecurePfit™

Contempra® - Tub Fillers

Roman Tub Trim

Model	Finish	Case Qty	List Price
RT6-5NCC	Polished Chrome	3	$401
RT6-5NCK	Brushed Nickel	3	$575
RT6-5NCB	Matte Black	3	$601
RT6-5NCBG	Brushed Gold	3	$718

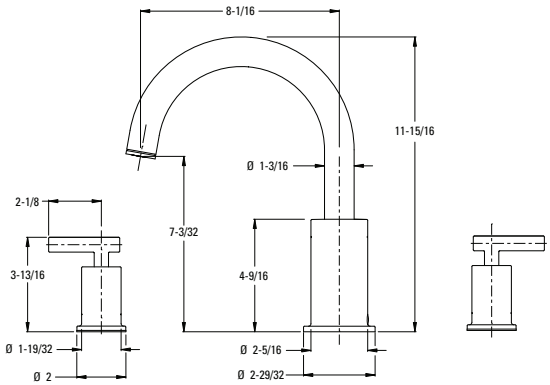

Technical Info

Holes: · 3-Hole

Features:
· Ceramic Disc Valves
· Fixed Spout
· Handles Included

Must Order ØX6-Ø5ØR or ØX6-15ØR Rough In Valve Separately. See Valve Section.

Free-Standing Tub Fillers

Modern Single Hole Free-Standing Tub Filler with Hand Shower

LG6-1MFC	Polished Chrome	1	$960
LG6-1MFK	Brushed Nickel	1	$1,173
LG6-1MFD	Polished Nickel	1	$1,173
LG6-1MFB	Matte Black	1	$1,276
LG6-1MFY	Tuscan Bronze	1	$1,261
LG6-1MFBG	Brushed Gold	1	$1,319

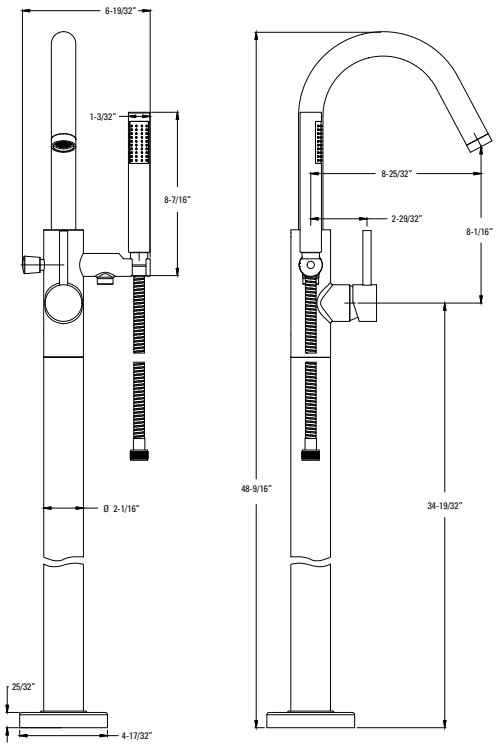

Holes: · 1-Hole Installation

Features:
· Sleek, Modern Design
· Ceramic Disc Valve
· Metal Lever Handle
· 8 gpm @ 60 psi
· Hand Shower 1.8 gpm @ 80 psi

Must Order Free-Standing Rough In Valve Separately. See Valve Section.

CEC Compliant · Cal Green Compliant · Meets EPA WaterSenseSM Standards · NSF Lead-Free Certified · ADA Compliant · UltraSeal™ · SecurePfit™

SHOWROOM PREFERRED

Pressure Balance Tub & Shower Trim

Model	Finish	Case Qty	List Price
LG89-8NCC	Polished Chrome	3	$296
LG89-8NCK	Brushed Nickel	3	$434
LG89-8NCB	Matte Black	3	$443
LG89-8NCBG	Brushed Gold	3	$535

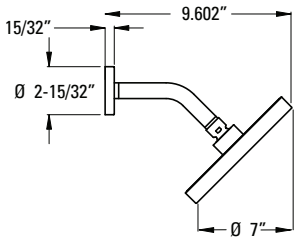

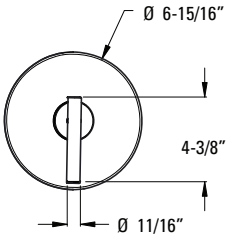

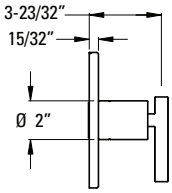

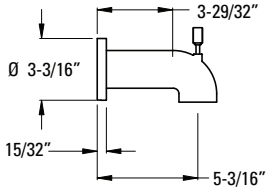

Features:
- SecurePfit™
- Metal Lever Handle
- Hot/Cold Indicator
- Decorative Raincan Showerhead
- Easy To Clean Spray Nozzles
- Quick Connect Metal Diverting Tub Spout
- Order 941-Ø55Ø for 1.5 gpm Showerhead Insert
- Showerhead 1.8 gpm @ 80 psi

Must Order Pressure Balance Rough In Valve Separately. See Valve Section.

Pressure Balance Shower Trim

LG89-7NCC	Polished Chrome	3	$212
LG89-7NCK	Brushed Nickel	3	$315
LG89-7NCB	Matte Black	3	$318
LG89-7NCBG	Brushed Gold	3	$383

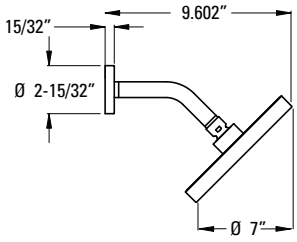

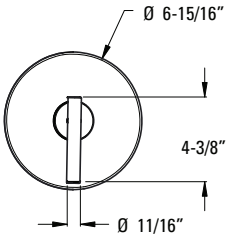

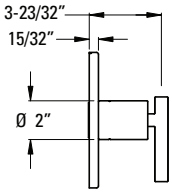

Features:
- SecurePfit™
- Metal Lever Handle
- Hot/Cold Indicator
- Decorative Raincan Showerhead
- Easy To Clean Spray Nozzles
- Order 941-Ø55Ø for 1.5 gpm Showerhead Insert
- Showerhead 1.8 gpm @ 80 psi

Must Order Pressure Balance Rough In Valve Separately. See Valve Section.

Contempra®

CEC Compliant | Cal Green Compliant | Meets EPA WaterSenseSM Standards | NSF Lead-Free Certified | ADA Compliant | UltraSeal™ | SecurePfit™

Pressure Balance Valve Only Trim

Model	Finish	Case Qty	List Price
R89-1NCC	Polished Chrome	3	$111
R89-1NCK	Brushed Nickel	3	$171
R89-1NCB	Matte Black	3	$175
R89-1NCBG	Brushed Gold	3	$198

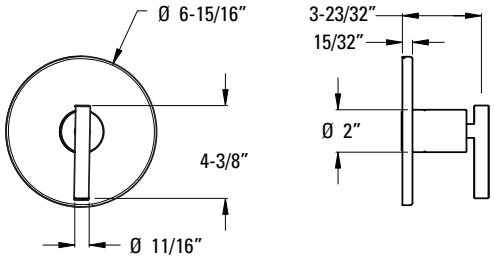

Technical Info

Features:
- SecurePfit™
- Metal Lever Handle
- Hot/Cold Indicator

Must Order Pressure Balance Rough in Valve Separately. See Valve Section.

Diverter Trim Only

Ø16-NC1C	Polished Chrome	3	$95
Ø16-NC1K	Brushed Nickel	3	$126
Ø16-NC1B	Matte Black	3	$143
Ø16-NC1BG	Brushed Gold	3	$171

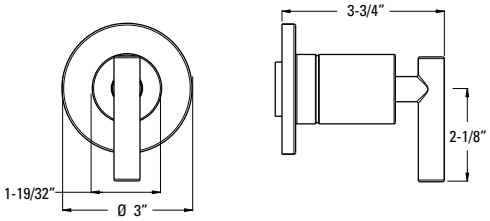

Features:
- SecurePfit™
- Metal Lever Handle and Matching Flange
- Can Be Used with Ø15-2WDX for Cal Green Compliant Applications

Must Order Ø15-4WDX or Ø15-2WDX Rough In Valve Separately. See Valve Section.

Raincan Showerhead

Model	Finish	Case Qty	List Price
973-241A	Polished Chrome	1	$106
973-241J	Brushed Nickel	1	$116
973-241B	Matte Black	1	$158
973-241BG	Brushed Gold	1	$183

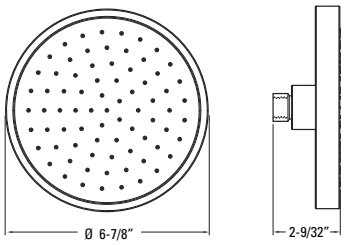

Technical Info

Features:
- Raincan Showerhead
- Easy To Clean Spray Nozzles
- Brass Ball Joint
- Shower Arm and Flange Sold Separately
- Order 941-Ø55Ø for 1.5 gpm Showerhead Insert

Shower Arm Flange

Model	Finish	Case Qty	List Price
96Ø-258A	Polished Chrome	1	$10
96Ø-258J	Brushed Nickel	1	$14
96Ø-258B	Matte Black	1	$17
96Ø-258BG	Brushed Gold	1	$19

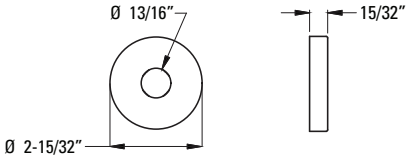

Features:
- All Metal
- Matches Contempra Style & Finishes

Curved Shower Arm

Model	Finish	Case Qty	List Price
973-Ø3ØA	Polished Chrome	1	$17
973-Ø3ØJ	Brushed Nickel	1	$18
973-Ø3ØB	Matte Black	1	$18
973-Ø3ØBG	Brushed Gold	1	$28

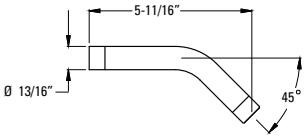

Features:
- Brass Shower Arm
- 1/2" NPT Male Connections

Contempra® Tub Spout

Model	Finish	Case Qty	List Price
92Ø-227A	Polished Chrome	1	$77
92Ø-277J	Brushed Nickel	1	$85
92Ø-277B	Matte Black	1	$91
92Ø-277BG	Brushed Gold	1	$96

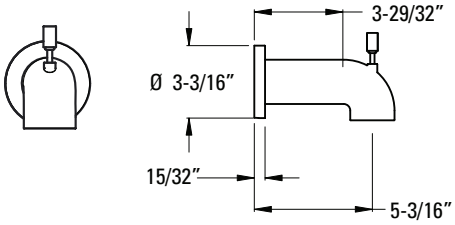

Features:
- All Metal
- Quick Connect Metal Diverting Tub Spout

CEC Compliant | Cal Green Compliant | Meets EPA WaterSenseSM Standards | NSF Lead-Free Certified | ADA Compliant | UltraSeal™ | SecurePfit™

18" Towel Bar

Model	Finish	Case Qty	List Price
BTB-NC1C	Polished Chrome	3	$65
BTB-NC1K	Brushed Nickel	3	$90
BTB-NC1B	Matte Black	3	$94
BTB-NC1BG	Brushed Gold	3	$115

Technical Info

Holes: · 2-Hole

Features:
- Premium Metal Construction
- Standard Mounting Bracket
- Concealed Screw Installation
- Mounting Hardware Included

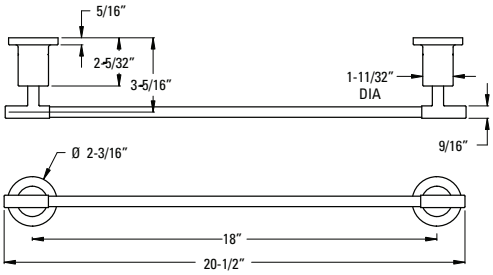

24" Towel Bar

Model	Finish	Case Qty	List Price
BTB-NC2C	Polished Chrome	3	$70
BTB-NC2K	Brushed Nickel	3	$95
BTB-NC2B	Matte Black	3	$106
BTB-NC2BG	Brushed Gold	3	$126

Holes: · 2-Hole

Features:
- Premium Metal Construction
- Standard Mounting Bracket
- Concealed Screw Installation
- Mounting Hardware Included

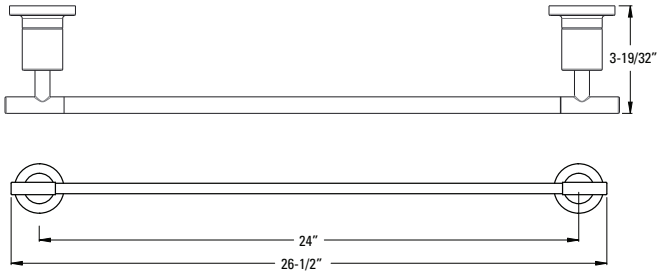

Towel Ring

Model	Finish	Case Qty	List Price
BRB-NC1C	Polished Chrome	3	$52
BRB-NC1K	Brushed Nickel	3	$65
BRB-NC1B	Matte Black	3	$77
BRB-NC1BG	Brushed Gold	3	$92

Holes: · 1-Hole

Features:
- Premium Metal Construction
- Standard Mounting Bracket
- Concealed Screw Installation
- Mounting Hardware Included

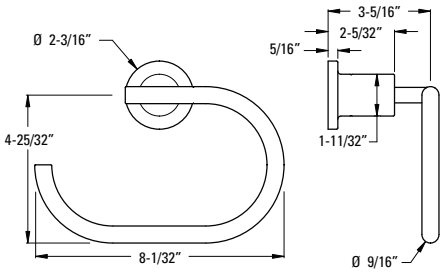

SHOWROOM PREFERRED

Paper Holder

Model	Finish	Case Qty	List Price
BPH-NC1C	Polished Chrome	3	$52
BPH-NC1K	Brushed Nickel	3	$70
BPH-NC1B	Matte Black	3	$77
BPH-NC1BG	Brushed Gold	3	$92

Technical Info

Holes: · 2-Hole

Features:
- Premium Metal Construction
- Standard Mounting Bracket
- Concealed Screw Installation
- Mounting Hardware Included
- Swivel Mount Paper Holder

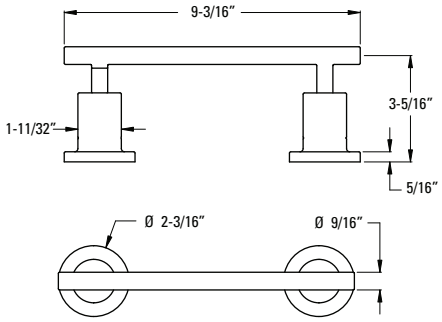

Robe Hook

BRH-NC1C	Polished Chrome	3	$39
BRH-NC1K	Brushed Nickel	3	$52
BRH-NC1B	Matte Black	3	$58
BRH-NC1BG	Brushed Gold	3	$68

Holes: · 1-Hole

Features:
- Premium Metal Construction
- Standard Mounting Bracket
- Concealed Screw Installation
- Mounting Hardware Included

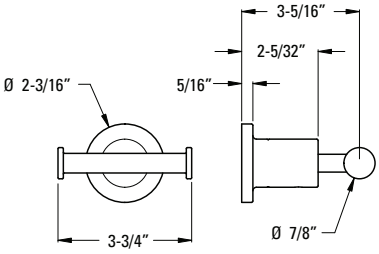

Deckard

The Deckard Collection embodies soft-modern design by incorporating curves into the familiar sleek, hard-edge motif of modern aesthetics. The clean, horizontal lines in this design create a precise look as the contrasting subtle curves offer balance. The small footprint of this faucet and the thin profile of the spout and handle make this a clean design that is optimal for any modern space.

Single Control Lavatory
LG42-DAØC

8" Widespread Lavatory
LG49-DAØC

3-Hole Roman Tub
RT6-5DAC

Diverter Trim
Ø16-DAØC

Tub & Shower
LG89-8DAC
Shower Only
LG89-7DAC
Valve Only
R89-1DAC

1-Hole Roman Tub
RT6-1DAC

2-Hole Roman Tub
RT6-2DAC

Accessories

18" & 24" Towel Bar
BTB-DA1C & BTB-DA2C

Towel Ring
BRB-DA1C

Paper Holder
BPH-DA1C

Robe Hook
BRH-DA1C

Single Control Lavatory

Model	Finish	Case Qty	List Price
LG42-DAØC	Polished Chrome	3	$241
LG42-DAØK	Brushed Nickel	3	$320
LG42-DAØB	Matte Black	3	$374

Technical Info

Holes: · 1 or 3-Hole 4" Installation

Features:
- Ceramic Disc Valve
- Metal Lever Handle
- High Temp Limit Stop
- Single Post Mounting Ring
- 3-Hole Deckplate Sold Separately 961-23Ø*
- All Metal Pop-Up
- 1.2 gpm @ 60 psi

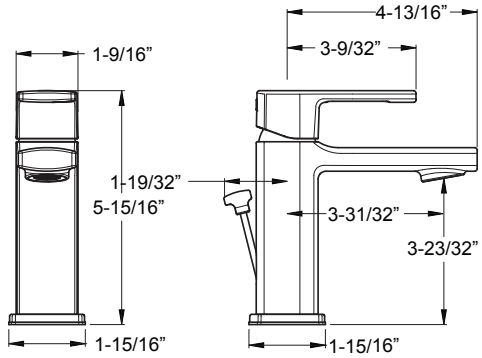

8" Widespread Lavatory

LG49-DAØC	Polished Chrome	3	$323
LG49-DAØK	Brushed Nickel	3	$381
LG49-DAØB	Matte Black	3	$426

Holes: · 3-Hole 8" Installation

Features:
- Ceramic Disc Valves
- Metal Lever Handles
- Fixed Spout
- All Metal Pop-Up
- Order 971-Ø86Ø to Increase Max. Install Depth to 3"
- 1.2 gpm @ 60 psi

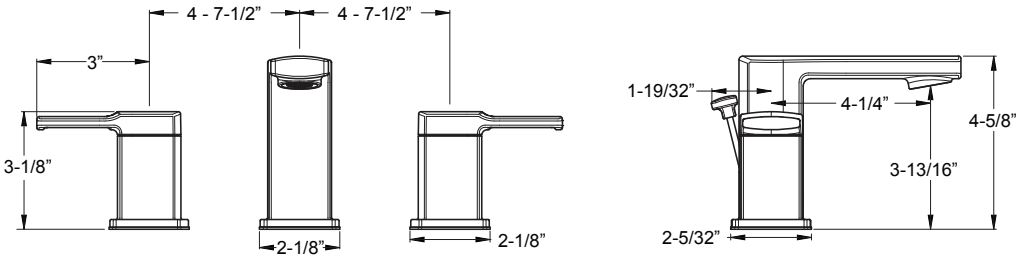

CEC Compliant · Cal Green Compliant · Meets EPA WaterSenseSM Standards · NSF Lead-Free Certified · ADA Compliant · UltraSeal™ · SecurePfit™

1-Hole Roman Tub

Model	Finish	Case Qty	List Price
RT6-1DAC	Polished Chrome	3	$541
RT6-1DAK	Brushed Nickel	3	$661
RT6-1DAB	Matte Black	3	$782

Technical Info

Holes: · 1-Hole

Features:
- Ceramic Disc Valve
- Metal Lever Handle
- Fixed Spout
- 1/2" NPSM Inlet Lines

Valve Included. No Additional Valving Needed.

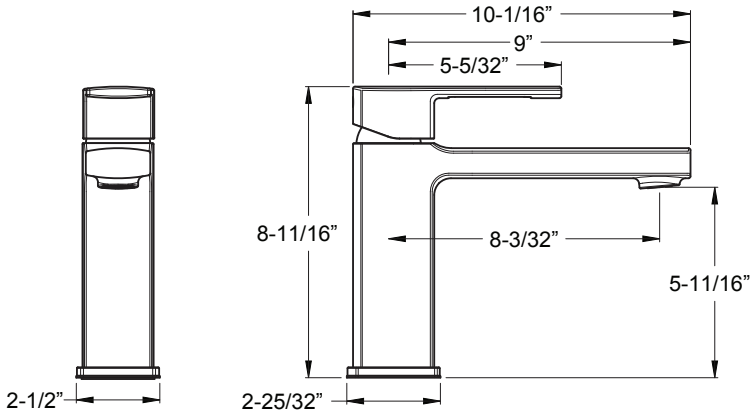

2-Hole Roman Tub

RT6-2DAC	Polished Chrome	3	$661
RT6-2DAK	Brushed Nickel	3	$782
RT6-2DAB	Matte Black	3	$842

Holes: · 2-Hole

Features:
- Ceramic Disc Valve
- Metal Lever Handle
- Fixed Spout
- Handheld Shower
- 1/2" NPSM Inlet Lines
- Hand Shower 1.8 gpm @ 60 psi

Valve Included. No Additional Valving Needed.

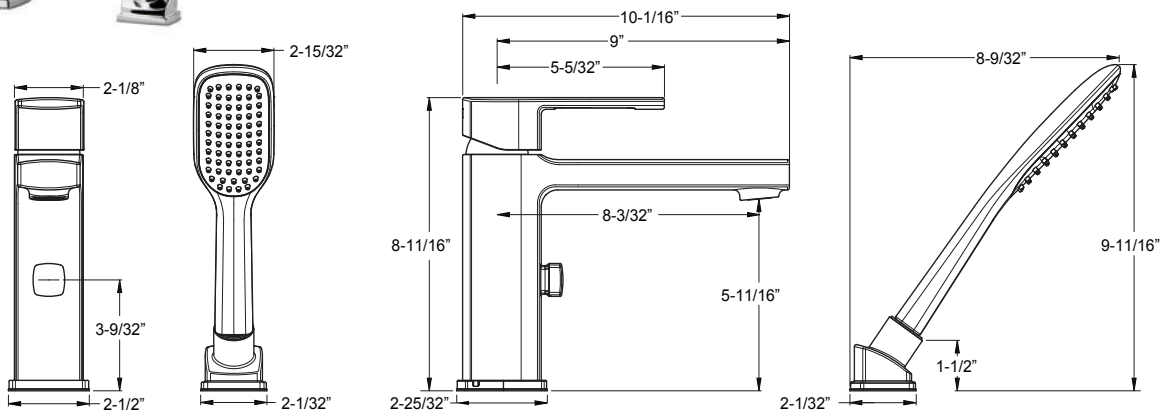

CEC Compliant | Cal Green Compliant | Meets EPA WaterSenseSM Standards | NSF Lead-Free Certified | ADA Compliant | UltraSeal™ | SecurePfit™

3-Hole Roman Tub Trim

Model	Finish	Case Qty	List Price
RT6-5DAC	Polished Chrome	3	$356
RT6-5DAK	Brushed Nickel	3	$470
RT6-5DAB	Matte Black	3	$505

Technical Info

Holes: · 3-Hole

Features:
· Ceramic Disc Valves
· Metal Lever Handles
· Fixed Spout

Must Order ØX6-Ø5ØR or ØX6-15ØR Rough In Valve Separately. See Valve Section.

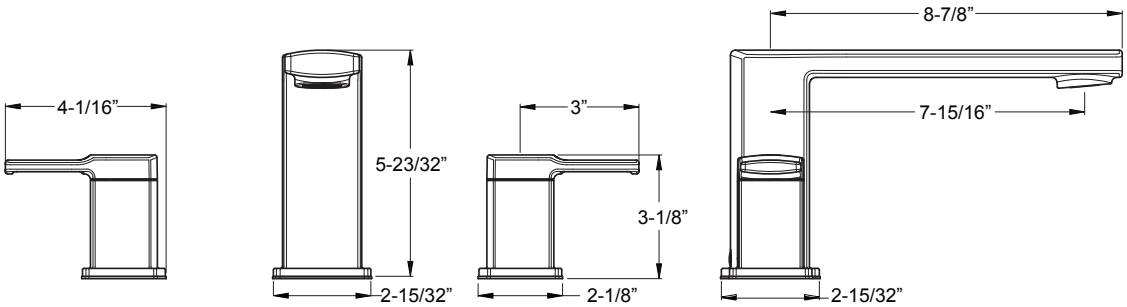

Pressure Balance Tub & Shower Trim

LG89-8DAC	Polished Chrome	3	$205
LG89-8DAK	Brushed Nickel	3	$290
LG89-8DAB	Matte Black	3	$331

Features:
· SecurePfit™
· Metal Lever Handle
· Hot/Cold Indicator
· Multi-Function Showerhead (3 Functions: Penetrating Massage, Rain Spray, and Invigorating Spray)
· Easy To Clean Spray Nozzles
· IP and Removable Quick Connect Metal Diverter Tub Spout
· Order 941-Ø55 for 1.5 gpm Showerhead Insert
· Showerhead 1.8 gpm @ 80 psi

Must Order Pressure Balance Rough in Valve Separately. See Valve Section.

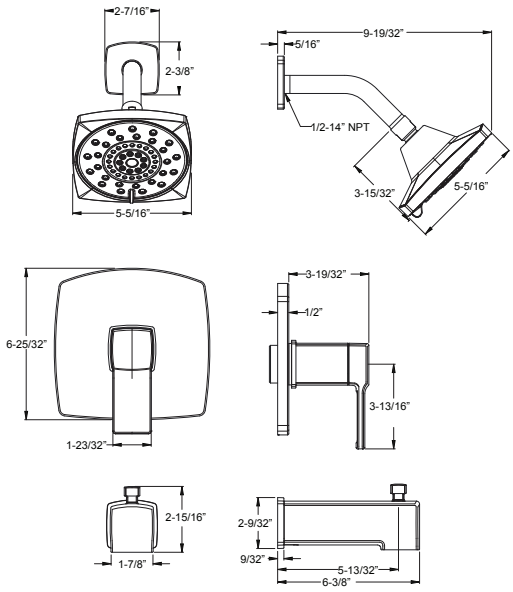

CEC Compliant · Cal Green Compliant · Meets EPA WaterSenseSM Standards · NSF Lead-Free Certified · ADA Compliant · UltraSeal™ · SecurePfit™

Pressure Balance Shower Trim

Model	Finish	Case Qty	List Price
LG89-7DAC	Polished Chrome	3	$169
LG89-7DAK	Brushed Nickel	3	$253
LG89-7DAB	Matte Black	3	$296

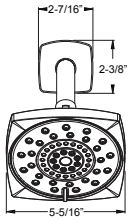

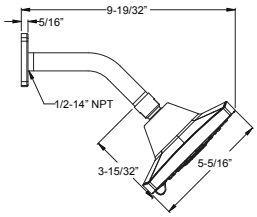

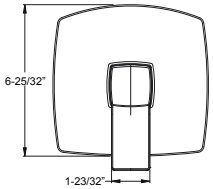

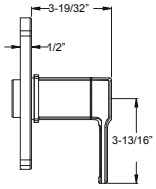

Technical Info

Features:
- SecurePfit™
- Metal Lever Handle
- Hot/Cold Indicator
- Multi-Function Showerhead (3 Functions: Penetrating Massage, Rain Spray, and Invigorating Spray)
- Easy To Clean Spray Nozzles
- Order 941-Ø55 for 1.5 gpm Showerhead Insert
- Showerhead 1.8 gpm @ 80 psi

Must Order Pressure Balance Rough in Valve Separately. See Valve Section.

Pressure Balance Valve Only Trim

Model	Finish	Case Qty	List Price
R89-1DAC	Polished Chrome	6	$91
R89-1DAK	Brushed Nickel	6	$122
R89-1DAB	Matte Black	6	$164

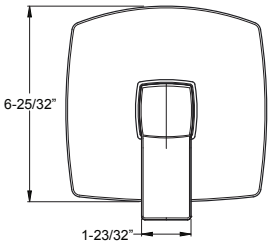

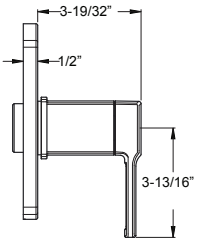

Features:
- SecurePfit™
- Metal Lever Handle
- Hot/Cold Indicator

Must Order Pressure Balance Rough in Valve Separately. See Valve Section.

Diverter Trim Only

Model	Finish	Case Qty	List Price
Ø16-DAØC	Polished Chrome	3	$86
Ø16-DAØK	Brushed Nickel	3	$103
Ø16-DAØB	Matte Black	3	$146

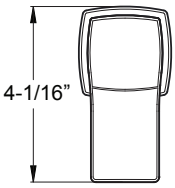

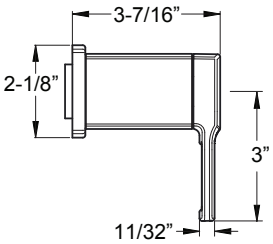

Features:
- SecurePfit™
- Metal Lever Handle and Matching Flange
- Can Be Used With Ø15-2WDX for Cal Green Compliant Applications

Must Order Ø15-4WDX or Ø15-2WDX Rough In Valve Separately. See Valve Section.

CEC Compliant | Cal Green Compliant | Meets EPA WaterSenseSM Standards | NSF Lead-Free Certified | ADA Compliant | UltraSeal™ | SecurePfit™

18" Towel Bar

Model	Finish	Case Qty	List Price
BTB-DA1C	Polished Chrome	3	$62
BTB-DA1K	Brushed Nickel	3	$67
BTB-DA1B	Matte Black	3	$73

Technical Info

Holes: · 2-Hole

Features:
· All Metal Construction
· Standard Mounting Brackets
· Concealed Screw Installation
· Mounting Hardware Included

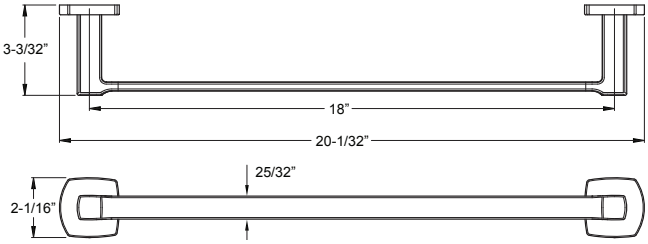

24" Towel Bar

BTB-DA2C	Polished Chrome	3	$64
BTB-DA2K	Brushed Nickel	3	$69
BTB-DA2B	Matte Black	3	$77

Holes: · 2-Hole

Features:
· All Metal Construction
· Standard Mounting Brackets
· Concealed Screw Installation
· Mounting Hardware Included

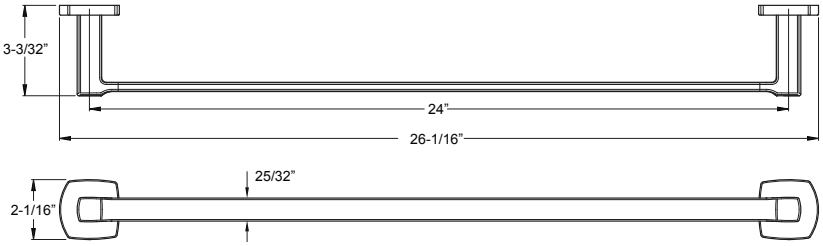

Towel Ring

BRB-DA1C	Polished Chrome	8	$44
BRB-DA1K	Brushed Nickel	8	$47
BRB-DA1B	Matte Black	8	$51

Holes: · 1-Hole

Features:
· All Metal Construction
· Standard Mounting Brackets
· Concealed Screw Installation
· Mounting Hardware Included

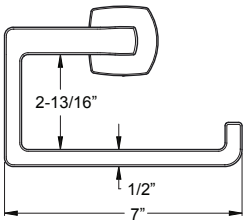

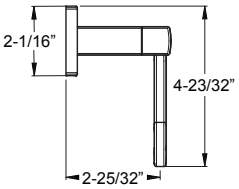

Paper Holder

Model	Finish	Case Qty	List Price
BPH-DA1C	Polished Chrome	3	$52
BPH-DA1K	Brushed Nickel	3	$60
BPH-DA1B	Matte Black	3	$64

Technical Info

Holes: · 2-Hole

Features:
- Swival Mount Paper Holder
- All Metal Construction
- Standard Mounting Brackets
- Concealed Screw Installation
- Mounting Hardware Included

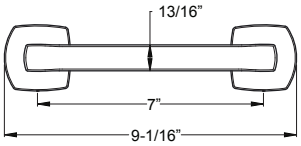

Robe Hook

BRH-DA1C	Polished Chrome	12	$34
BRH-DA1K	Brushed Nickel	12	$38
BRH-DA1B	Matte Black	12	$42

Holes: · 1-Hole

Features:
- All Metal Construction
- Standard Mounting Brackets
- Concealed Screw Installation
- Mounting Hardware Included

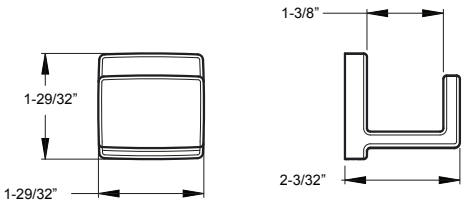

Northcott

Redefine traditional style with Northcott, a collection for the bath that brings modern sensibility to classic bath design. This collection begins with centerpiece faucets featuring graceful, rounded lines inspired by vintage plumbing fixtures. The easy to clean design is coupled with high quality solid cast construction and thoughtful features like a 5 function showerhead and matching bath accessories.

Single Control Lavatory
LG42-MGØC

4" Centerset Lavatory
LG48-MGØC

8" Widespread Lavatory
LG49-MGØC

Diverter Trim
Ø16-MGØC

3-Hole Roman Tub
RT6-5MGC

Tub & Shower
LG89-8MGC
Shower Only
LG89-7MGC
Valve Only
R89-1MGC

Accessories

18" & 24" Towel Bar
BTB-MG1C & BTB-MG2C

Towel Ring
BRB-MG1C

Paper Holder
BPH-MG1C

Robe Hook
BRH-MG1C

Single Control Lavatory

Model	Finish	Case Qty	List Price
LG42-MGØC	Polished Chrome	3	$241
LG42-MGØK	Brushed Nickel	3	$320
LG42-MGØY	Tuscan Bronze	3	$374

Technical Info

Holes: · 1 or 3-Hole 4" Installation

Features:
- Ceramic Disc Valve
- Metal Lever Handle
- High Arc Fixed Spout
- High Temp Limit Stop
- 3-Hole Deckplate Sold Separately 961-2Ø9*
- All Metal Pop-Up
- 1.2 gpm @ 60 psi

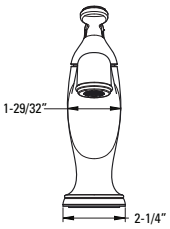

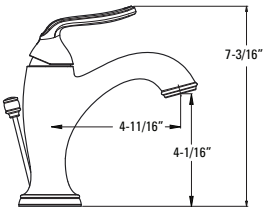

4" Centerset Lavatory

LG48-MGØC	Polished Chrome	3	$236
LG48-MGØK	Brushed Nickel	3	$315
LG48-MGØY	Tuscan Bronze	3	$361

Holes: · 3-Hole 4" Installation

Features:
- Ceramic Disc Valves
- Metal Lever Handles
- High Arc Fixed Spout
- All Metal Pop-Up
- 1.2 gpm @ 60 psi

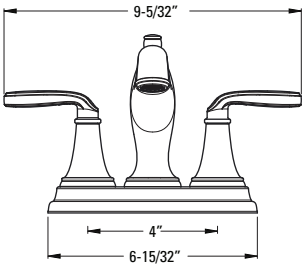

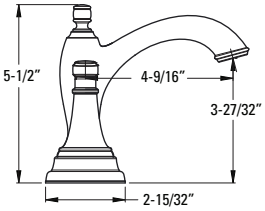

8" Widespread Lavatory

LG49-MGØC	Polished Chrome	3	$338
LG49-MGØK	Brushed Nickel	3	$398
LG49-MGØY	Tuscan Bronze	3	$445

Holes: · 3-Hole 8-15" Installation

Features:
- Ceramic Disc Valves
- Metal Lever Handles
- High Arc Fixed Spout
- All Metal Pop-Up
- Order 971-Ø86Ø to Increase Max. Install Depth to 3"
- 1.2 gpm @ 60 psi

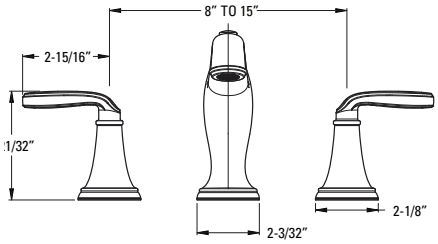

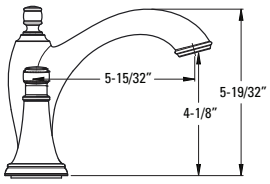

CEC Compliant · Cal Green Compliant · Meets EPA WaterSenseSM Standards · NSF Lead-Free Certified · ADA Compliant · UltraSeal™ · SecurePfit™

Roman Tub Trim

Model	Finish	Case Qty	List Price
RT6-5MGC	Polished Chrome	3	$356
RT6-5MGK	Brushed Nickel	3	$470
RT6-5MGY	Tuscan Bronze	3	$505

Technical Info

Holes: · 3-Hole

Features:
· Ceramic Disc Valves
· Metal Lever Handles
· High Arc Fixed Spout

Must Order ØX6-Ø5ØR or ØX6-15ØR Rough In Valve Separately. See Valve Section.

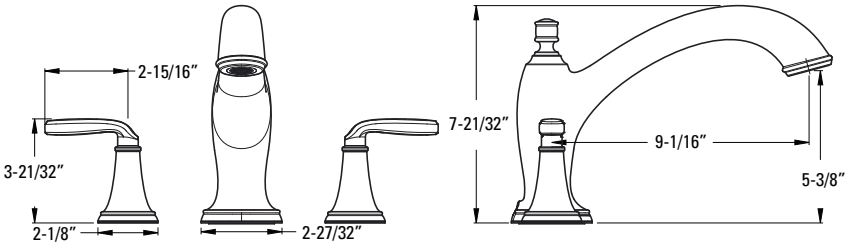

CEC Compliant | Cal Green Compliant | Meets EPA WaterSenseSM Standards | NSF Lead-Free Certified | ADA Compliant | UltraSeal™ | SecurePfit™

Pressure Balance Tub & Shower Trim

Model	Finish	Case Qty	List Price
LG89-8MGC	Polished Chrome	3	$205
LG89-8MGK	Brushed Nickel	3	$290
LG89-8MGY	Tuscan Bronze	3	$331

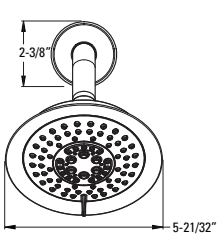

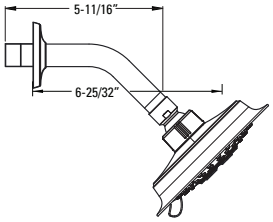

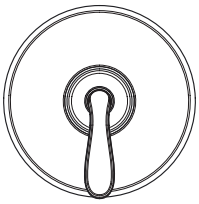

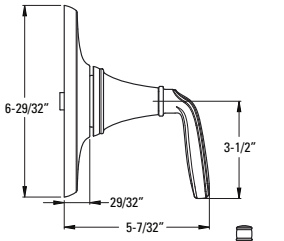

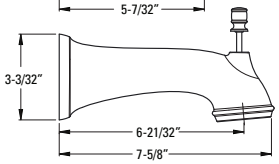

Features:
- SecurePfit™
- Metal Lever Handle
- Hot/Cold Indicator
- 5 Functions:
  - Penetrating Massage
  - Rain Spray
  - Invigorating Spray
  - Champagne/Raincan Combo
  - Champagne Spray
- Easy To Clean Spray Nozzles
- IP And Quick Connect Diverted Tub Spout
- Order 941-Ø55Ø for 1.5 gpm Showerhead Insert
- Showerhead 1.8 gpm @ 80 psi

Must Order Pressure Balance Rough In Valve Separately. See Valve Section.

Pressure Balance Shower Trim

LG89-7MGC	Polished Chrome	3	$169
LG89-7MGK	Brushed Nickel	3	$253
LG89-7MGY	Tuscan Bronze	3	$296

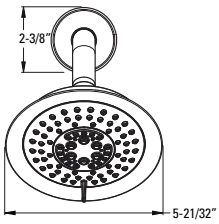

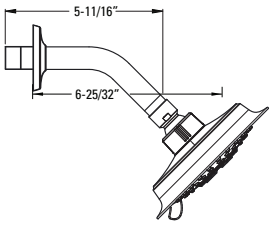

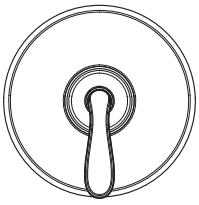

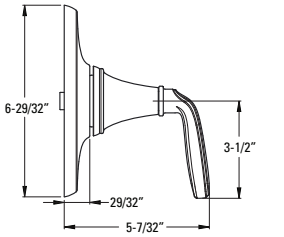

Features:
- SecurePfit™
- Metal Lever Handle
- Hot/Cold Indicator
- 5 Functions:
  - Penetrating Massage
  - Rain Spray
  - Invigorating Spray
  - Champagne/Raincan Combo
  - Champagne Spray
- Easy To Clean Spray Nozzles
- Order 941-Ø55Ø for 1.5 gpm Showerhead Insert
- Showerhead 1.8 gpm @ 80 psi

Must Order Pressure Balance Rough In Valve Separately. See Valve Section.

CEC Compliant | Cal Green Compliant | Meets EPA WaterSenseSM Standards | NSF Lead-Free Certified | ADA Compliant | UltraSeal™ | SecurePfit™

Pressure Balance Valve Only Trim

Model	Finish	Case Qty	List Price
R89-1MGC	Polished Chrome	3	$91
R89-1MGK	Brushed Nickel	3	$122
R89-1MGY	Tuscan Bronze	3	$164

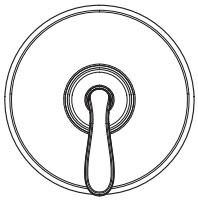

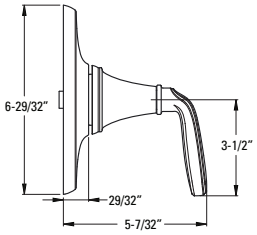

Technical Info

Features:
- SecurePfit™
- Metal Lever Handle
- Hot/Cold Indicator

Must Order Pressure Balance Rough In Valve Separately. See Valve Section.

Diverter Trim Only

Ø16-MGØC	Polished Chrome	3	$86
Ø16-MGØK	Brushed Nickel	3	$103
Ø16-MGØY	Tuscan Bronze	3	$146

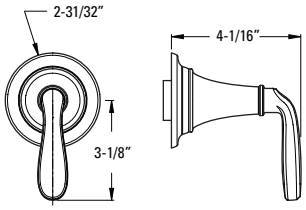

Features:
- SecurePfit™
- Metal Lever Handle and Matching Flange
- Can be Used With Ø15-2WDX for Cal Green Compliant Applications

Must Order Ø15-4WDX or Ø15-2WDX Rough In Valve Separately. See Valve Section.

CEC Compliant | Cal Green Compliant | Meets EPA WaterSenseSM Standards | NSF Lead-Free Certified | ADA Compliant | UltraSeal™ | SecurePfit™

18" Towel Bar

Model	Finish	Case Qty	List Price
BTB-MG1C	Polished Chrome	3	$60
BTB-MG1K	Brushed Nickel	3	$65
BTB-MG1Y	Tuscan Bronze	3	$71

Technical Info

Holes: · 2-Hole

Features:
- All Metal Construction
- Standard Mounting Bracket
- Concealed Screw Installation
- Mounting Hardware Included

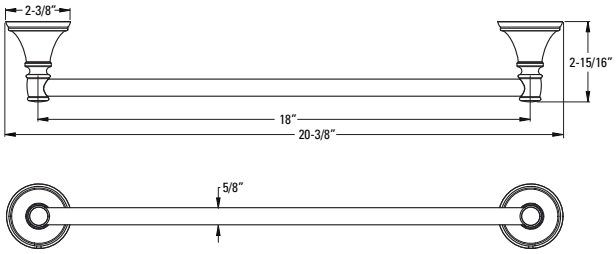

24" Towel Bar

Model	Finish	Case Qty	List Price
BTB-MG2C	Polished Chrome	3	$62
BTB-MG2K	Brushed Nickel	3	$67
BTB-MG2Y	Tuscan Bronze	3	$73

Holes: · 2-Hole

Features:
- All Metal Construction
- Standard Mounting Bracket
- Concealed Screw Installation
- Mounting Hardware Included

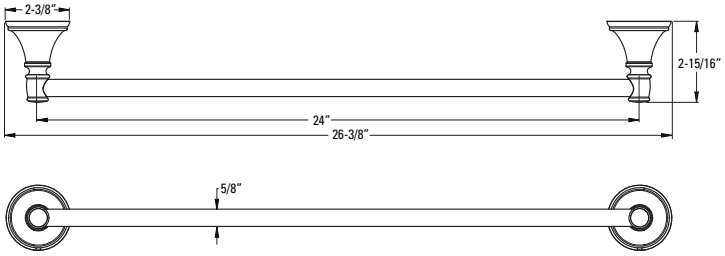

Towel Ring

Model	Finish	Case Qty	List Price
BRB-MG1C	Polished Chrome	3	$43
BRB-MG1K	Brushed Nickel	3	$46
BRB-MG1Y	Tuscan Bronze	3	$50

Holes: · 1-Hole

Features:
- All Metal Construction
- Standard Mounting Bracket
- Concealed Screw Installation
- Mounting Hardware Included

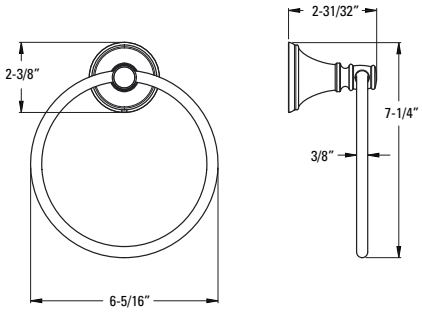

Paper Holder

Model	Finish	Case Qty	List Price
BPH-MG1C	Polished Chrome	3	$50
BPH-MG1K	Brushed Nickel	3	$57
BPH-MG1Y	Tuscan Bronze	3	$62

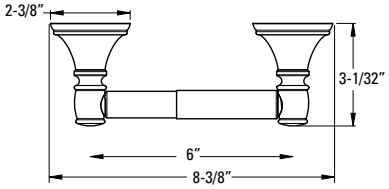

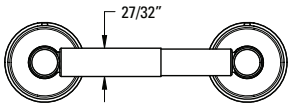

Technical Info

Holes: · 2-Hole

Features:
- All Metal Construction
- Standard Mounting Bracket
- Concealed Screw Installation
- Mounting Hardware Included

Robe Hook

Model	Finish	Case Qty	List Price
BRH-MG1C	Polished Chrome	3	$34
BRH-MG1K	Brushed Nickel	3	$38
BRH-MG1Y	Tuscan Bronze	3	$44

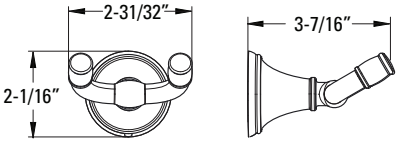

Holes: · 1-Hole

Features:
- All Metal Construction
- Standard Mounting Bracket
- Concealed Screw Installation
- Mounting Hardware Included

Bronson

Stay current with transitional design trends while making a statement all your own. The Bronson Collection for the bath showcases both square angles and graceful curves that rightfully stand out as singular eye-catching elements, yet work together to create a cohesive whole.

Single Control Lavatory
LG42-BSØC

4" Centerset Lavatory
LG48-BSØC

8" Widespread Lavatory
LG49-BSØC

3-Hole Roman Tub
RT6-5BSC

Tub & Shower
LG89-8BSC
Shower Only
LG89-7BSC
Valve Only
R89-1BSC

Diverter Trim
Ø16-BSØC

Accessories

18" & 24" Towel Bar
BTB-BS1C & BTB-BS2C

Towel Ring
BRB-BS1C

Paper Holder
BPH-BS1C

Robe Hook
BRH-BS1C

Bronson™ - Lavatory Faucets

Single Control Lavatory

Model	Finish	Case Qty	List Price
LG42-BSØC	Polished Chrome	3	$241
LG42-BSØK	Brushed Nickel	3	$320
LG42-BSØY	Tuscan Bronze	3	$374

Technical Info

Holes: · 1 or 3-Hole 4" Installation

Features:
- Ceramic Disc Valve with Temperature Limit Stop
- Metal Lever Handle
- Forward Only Handle Operation
- Single Post Mounting Ring
- 3-Hole Deckplate Sold Separately 961-24Ø*
- All Metal Push & Seal
- Order 972-Ø22* and 941-681* for Optional Metal Drain
- 1.2 gpm @ 60 psi

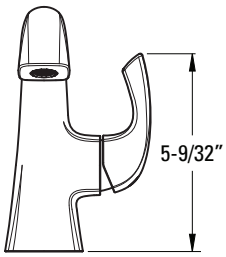

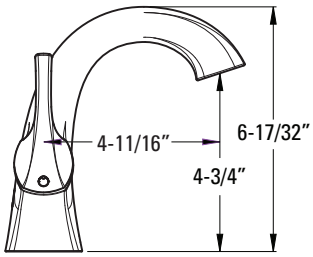

4" Centerset Lavatory

LG48-BSØC	Polished Chrome	3	$236
LG48-BSØK	Brushed Nickel	3	$315
LG48-BSØY	Tuscan Bronze	3	$361

Holes: · 3-Hole 4" Installation

Features:
- Ceramic Disc Valves
- Metal Lever Handles
- High Arc Fixed Spout
- All Metal Pop-Up
- 1.2 gpm @ 60 psi

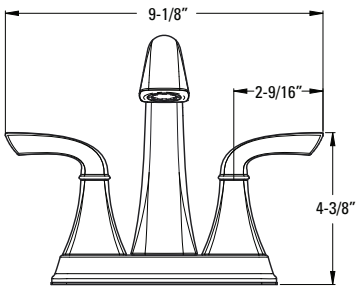

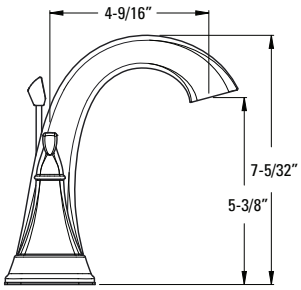

CEC Compliant · Cal Green Compliant · Meets EPA WaterSense℠ Standards · NSF Lead-Free Certified · ADA Compliant · UltraSeal™ · SecurePfit™

8" Widespread Lavatory

Model	Finish	Case Qty	List Price
LG49-BSØC	Polished Chrome	3	$338
LG49-BSØK	Brushed Nickel	3	$398
LG49-BSØY	Tuscan Bronze	3	$445

Technical Info

Holes: · 3-Hole 8-15" Installation

Features:
- Ceramic Disc Valves
- Metal Lever Handles
- High Arc Fixed Spout
- Quick Connect Hose Assembly
- All Metal Pop-Up
- Order 971-Ø86Ø to Increase Max Install Depth to 3"
- 1.2 gpm @ 60 psi

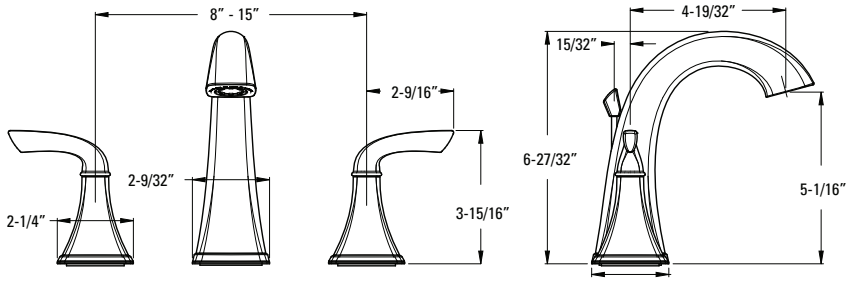

Roman Tub Trim

RT6-5BSC	Polished Chrome	3	$360
RT6-5BSK	Brushed Nickel	3	$475
RT6-5BSY	Tuscan Bronze	3	$512

Holes: · 3-Hole

Features:
- Ceramic Disc Valves
- Metal Lever Handles
- High Arc Fixed Spout

Must Order ØX6-Ø5ØR or ØX6-15ØR Rough In Valve Separately. See Valve Section.

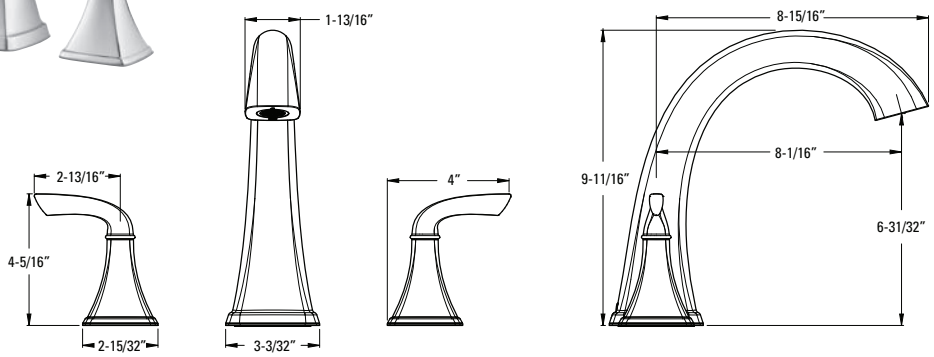

CEC Compliant · Cal Green Compliant · Meets EPA WaterSense℠ Standards · NSF Lead-Free Certified · ADA Compliant · UltraSeal™ · SecurePfit™

Bronson™ - Tub & Shower

Pressure Balance Tub & Shower Trim

Model	Finish	Case Qty	List Price
LG89-8BSC	Polished Chrome	3	$205
LG89-8BSK	Brushed Nickel	3	$290
LG89-8BSY	Tuscan Bronze	3	$331

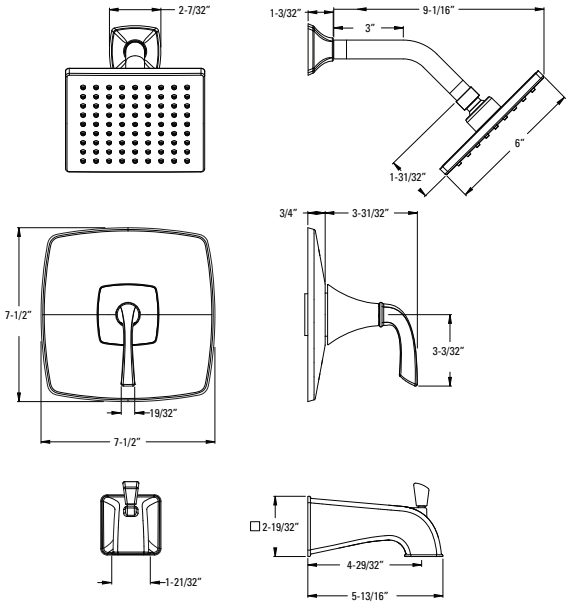

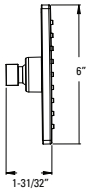

Technical Info

Features:
- SecurePfit™
- Metal Lever Handle
- Hot/Cold Indicator
- Decorative Raincan Showerhead
- Easy To Clean Spray Nozzles
- IP and Quick Connect Diverted Tub Spout
- Order 941-Ø55 for 1.5 gpm Showerhead Insert
- Showerhead 1.8 gpm @ 80 psi

Must Order Pressure Balance Rough in Valve Separately. See Valve Section.

Pressure Balance Shower Trim

LG89-7BSC	Polished Chrome	3	$169
LG89-7BSK	Brushed Nickel	3	$253
LG89-7BSY	Tuscan Bronze	3	$ 296

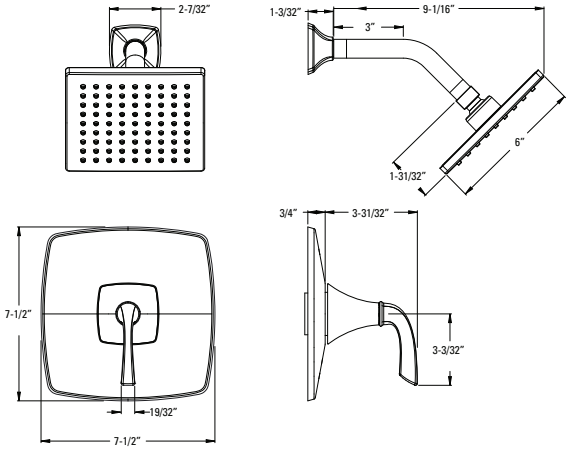

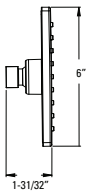

Technical Info

Features:
- SecurePfit™
- Metal Lever Handle
- Hot/Cold Indicator
- Decorative Raincan Showerhead
- Easy To Clean Spray Nozzles
- Order 941-Ø55 for 1.5 gpm Showerhead Insert
- Showerhead 1.8 gpm @ 80 psi

Must Order Pressure Balance Rough in Valve Separately. See Valve Section.

CEC Compliant | Cal Green Compliant | Meets EPA WaterSense℠ Standards | NSF Lead-Free Certified | ADA Compliant | UltraSeal™ | SecurePfit™

Pressure Balance Valve Only Trim

Model	Finish	Case Qty	List Price
R89-1BSC	Polished Chrome	3	$91
R89-1BSK	Brushed Nickel	3	$122
R89-1BSY	Tuscan Bronze	3	$164

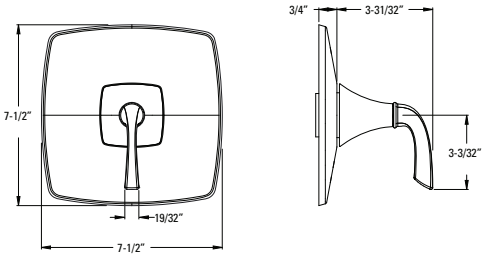

Technical Info

Features:
- SecurePfit™
- Metal Lever Handle
- Hot/Cold Indicator

Must Order Pressure Balance Rough in Valve Separately. See Valve Section.

Diverter Trim Only

Ø16-BSØC	Polished Chrome	3	$86
Ø16-BSØK	Brushed Nickel	3	$103
Ø16-BSØY	Tuscan Bronze	3	$146

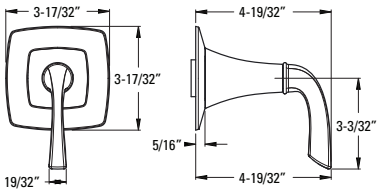

Features:
- SecurePfit™
- Metal Lever Handle and Matching Flange
- Can be Used with 015-2WDX for Cal Green Compliant Applications

Must Order Ø15-4WDX or Ø15-2WDX Rough In Valve Separately. See Valve Section.

CEC Compliant | Cal Green Compliant | Meets EPA WaterSense℠ Standards | NSF Lead-Free Certified | ADA Compliant | UltraSeal™ | SecurePfit™

Bronson™ - Accessories

18" Towel Bar

Model	Finish	Case Qty	List Price
BTB-BS1C	Polished Chrome	3	$60
BTB-BS1K	Brushed Nickel	3	$65
BTB-BS1Y	Tuscan Bronze	3	$71

Technical Info

Holes: · 2-Hole

Features:
· Premium Metal Construction
· Superior Mounting Posts
· Concealed Screw Installation
· Mounting Hardware Included

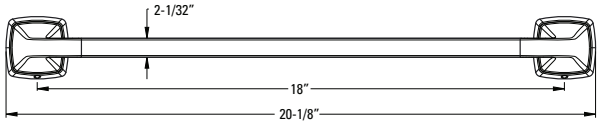

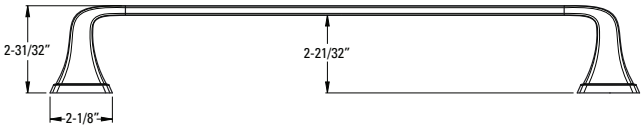

24" Towel Bar

BTB-BS2C	Polished Chrome	3	$62
BTB-BS2K	Brushed Nickel	3	$67
BTB-BS2Y	Tuscan Bronze	3	$73

Holes: · 2-Hole

Features:
· Premium Metal Construction
· Superior Mounting Posts
· Concealed Screw Installation
· Mounting Hardware Included

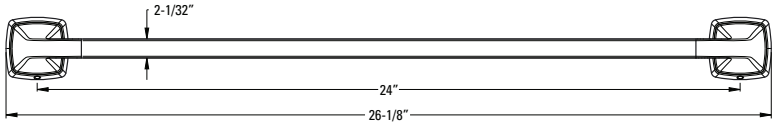

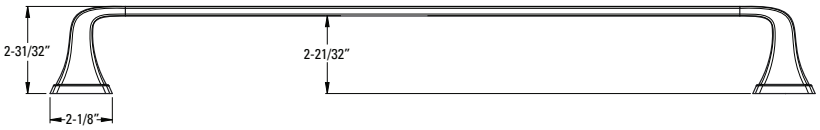

Towel Ring

BRB-BS1C	Polished Chrome	3	$43
BRB-BS1K	Brushed Nickel	3	$47
BRB-BS1Y	Tuscan Bronze	3	$51

Holes: · 1-Hole

Features:
· Premium Metal Construction
· Superior Mounting Posts
· Concealed Screw Installation
· Mounting Hardware Included

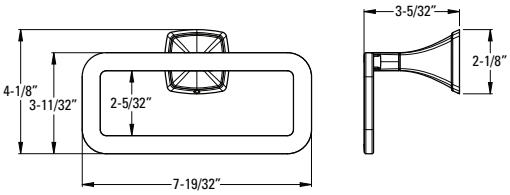

Paper Holder

Model	Finish	Case Qty	List Price
BPH-BS1C	Polished Chrome	3	$50
BPH-BS1K	Brushed Nickel	3	$57
BPH-BS1Y	Tuscan Bronze	3	$62

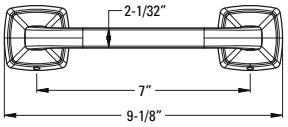

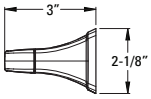

Technical Info

Holes: · 1-Hole

Features:
- Premium Metal Construction
- Superior Mounting Posts
- Concealed Screw Installation
- Mounting Hardware Included

Robe Hook

Model	Finish	Case Qty	List Price
BRH-BS1C	Polished Chrome	3	$29
BRH-BS1K	Brushed Nickel	3	$31
BRH-BS1Y	Tuscan Bronze	3	$34

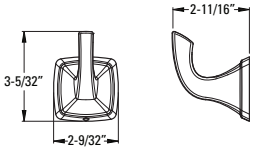

Holes: · 1-Hole

Features:
- Premium Metal Construction
- Superior Mounting Posts
- Concealed Screw Installation
- Mounting Hardware Included

Saxton

Defining the décor of a trans-modern movement, with its sleek lines and sweeping curved spout Saxton offers a transitional style with a modern twist and is an ideal enhancement to any bath.

4" Centerset Lavatory
LG48-GLØC

8" Widespread Lavatory
LG49-GLØC

3-Hole Roman Tub
RT6-5GLC

4-Hole Roman Tub
LG6-4GLC

Diverter Trim
Ø16-GL1C

Tub & Shower
LG89-8GL1C

Shower Only
LG89-7GL1C

Valve Only
R89-1GL1C

Accessories

18" & 24" Towel Bar
BTB-GL1C & BTB-GL2C

Towel Ring
BRB-GL1C

Paper Holder
BPH-GL1C

Robe Hook
BRH-GL1C

4" Centerset Lavatory

Model	Finish	Case Qty	List Price
LG48-GLØC	Polished Chrome	3	$183
LG48-GLØK	Brushed Nickel	3	$218
LG48-GLØY	Tuscan Bronze	3	$248

Technical Info

Holes: · 3-Hole 4" Installation

Features:
- Ceramic Disc Valves
- Metal Lever Handles
- High Arc Fixed Spout
- Push & Seal Drain Included
- Drilled for Pop-Up
- Order 941-667* and 972-Ø22*for Optional Metal Drain
- 1.2 gpm @ 60 psi

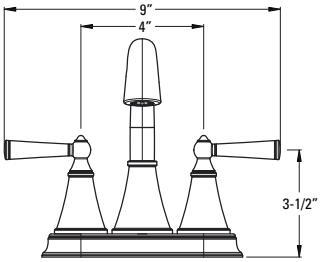

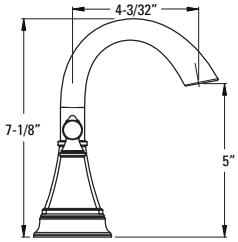

8" Widespread Lavatory

LG49-GLØC	Polished Chrome	3	$278
LG49-GLØK	Brushed Nickel	3	$301
LG49-GLØY	Tuscan Bronze	3	$393

Holes: · 3-Hole 8-15" Installation

Features:
- Ceramic Disc Valves
- Metal Lever Handles
- High Arc Fixed Spout
- Quick Connect Hose Assembly
- All Metal Pop-Up
- Order 971-Ø89Ø to Increase Max. Install Depth to 3"
- 1.2 gpm @ 60 psi

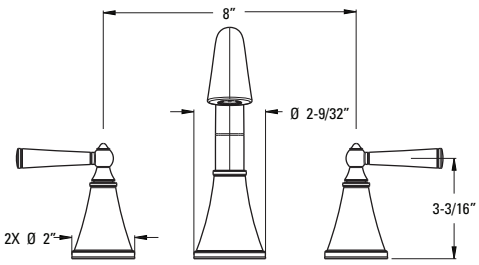

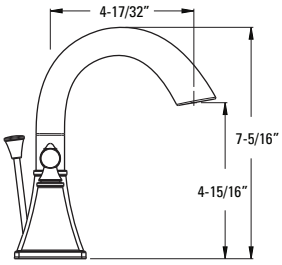

CEC Compliant · Cal Green Compliant · Meets EPA WaterSense℠ Standards · NSF Lead-Free Certified · ADA Compliant · UltraSeal™ · SecurePfit™

Roman Tub Trim

Model	Finish	Case Qty	List Price
RT6-5GLC	Polished Chrome	3	$251
RT6-5GLK	Brushed Nickel	3	$305
RT6-5GLY	Tuscan Bronze	3	$397

Technical Info

Holes: · 3-Hole

Features:
· Ceramic Disc Valves
· Metal Lever Handles
· High Arc Fixed Spout

Must Order ØX6-Ø5ØR or ØX6-15ØR Rough In Valve Separately. See Valve Section.

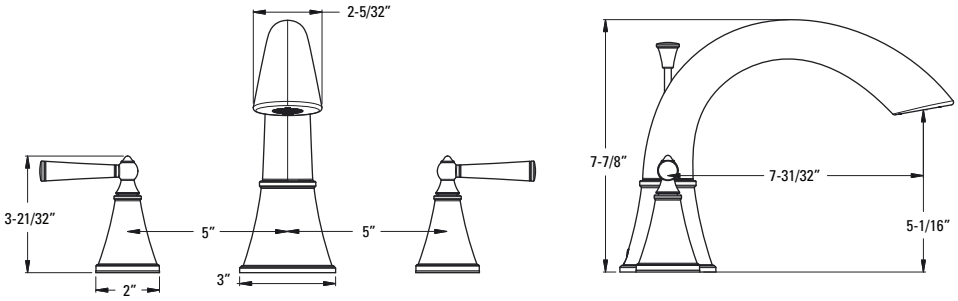

Roman Tub Trim with Hand Shower

LG6-4GLC	Polished Chrome	4	$512
LG6-4GLK	Brushed Nickel	4	$652
LG6-4GLY	Tuscan Bronze	4	$730

Holes: · 4-Hole

Features:
· Ceramic Disc Valves
· Metal Lever Handles
· Fixed Spout
· Hand Shower 1.8 gpm @ 80 psi

Must Order ØX6-44ØR Rough In Valve Separately. See Valve Section.

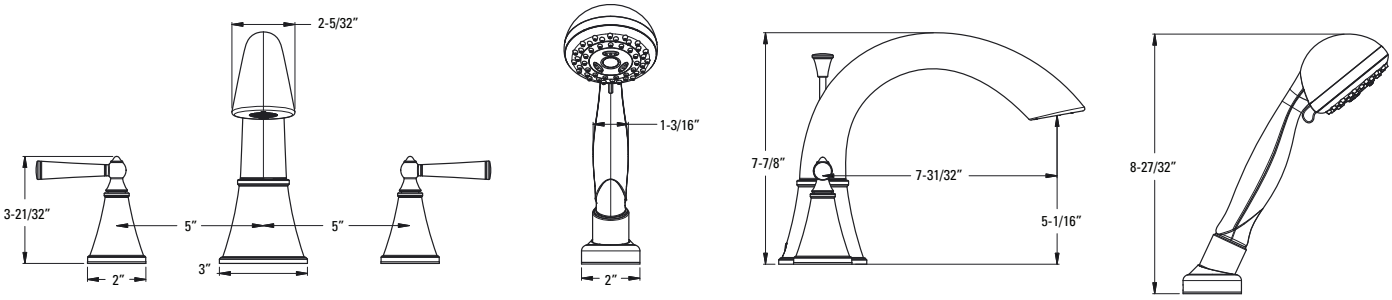

CEC Compliant · Cal Green Compliant · Meets EPA WaterSenseSM Standards · NSF Lead-Free Certified · ADA Compliant · UltraSeal™ · SecurePfit™

Pressure Balance Tub & Shower Trim

Model	Finish	Case Qty	List Price
LG89-8GL1C	Polished Chrome	3	$124
LG89-8GL1K	Brushed Nickel	3	$271
LG89-8GL1Y	Tuscan Bronze	3	$311

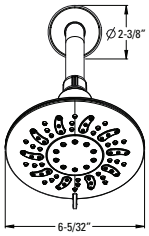

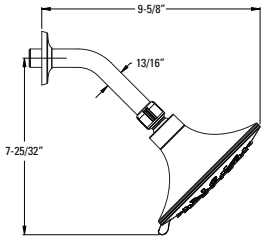

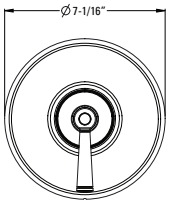

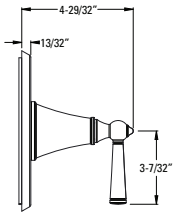

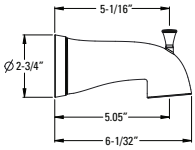

Technical Info

Features:
- SecurePfit™
- Metal Lever Handle
- Hot/Cold Indicator
- 3 Functions
  - -Full Spray
  - - Penetrating Massage
  - - Full Spray/Massage Combo Spray
- Easy To Clean Spray Nozzles
- IP Threaded Metal Diverter Tub Spout
- Order 941-Ø55Ø for 1.5 gpm Showerhead Insert
- Showerhead 1.8 gpm @ 80 psi

Must Order Pressure Balance Rough In Valve Separately. See Valve Section.

Pressure Balance Shower Trim

LG89-7GL1C	Polished Chrome	3	$92
LG89-7GL1K	Brushed Nickel	3	$238
LG89-7GL1Y	Tuscan Bronze	3	$282

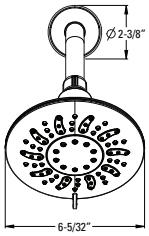

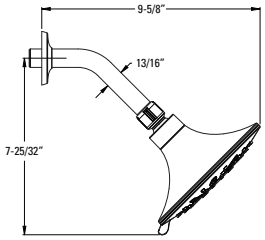

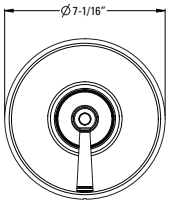

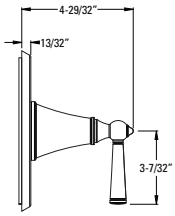

Features:
- SecurePfit™
- Metal Lever Handle
- Hot/Cold Indicator
- 3 Functions
  - -Full Spray
  - - Penetrating Massage
  - - Full Spray/Massage Combo Spray
- Easy To Clean Spray Nozzles
- Order 941-Ø55Ø for 1.5 gpm Showerhead Insert
- Showerhead 1.8 gpm @ 80 psi

Must Order Pressure Balance Rough In Valve Separately. See Valve Section.

CEC Compliant | Cal Green Compliant | Meets EPA WaterSense℠ Standards | NSF Lead-Free Certified | ADA Compliant | UltraSeal™ | SecurePfit™

Pressure Balance Valve Only Trim

Model	Finish	Case Qty	List Price
R89-1GL1C	Polished Chrome	3	$73
R89-1GL1K	Brushed Nickel	3	$166
R89-1GL1Y	Tuscan Bronze	3	$198

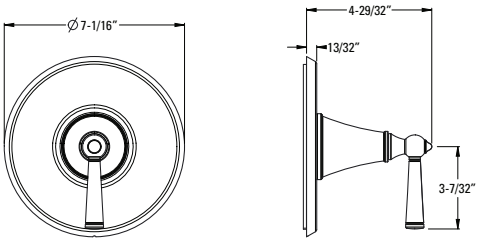

Technical Info

Features:
- SecurePfit™
- Metal Lever Handle
- Hot/Cold Indicator

Must Order Pressure Balance Rough In Valve Separately. See Valve Section.

Diverter Trim Only

Ø16-GL1C	Polished Chrome	3	$66
Ø16-GL1K	Brushed Nickel	3	$91
Ø16-GL1Y	Tuscan Bronze	3	$122

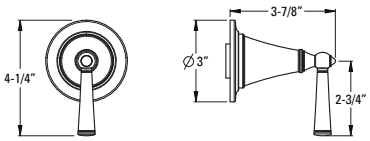

Features:
- SecurePfit™
- Metal Lever Handle and Matching Flange
- Can Be Used with Ø15-2WDX for Cal Green Compliant Applications

Must Order Ø15-4WDX or Ø15-2WDX Rough In Valve Separately. See Valve Section.

18" Towel Bar

Model	Finish	Case Qty	List Price
BTB-GL1C	Polished Chrome	3	$65
BTB-GL1K	Brushed Nickel	3	$77
BTB-GL1Y	Tuscan Bronze	3	$89

Technical Info

Holes: · 2-Hole

Features:
- All Metal Construction
- Standard Mounting Bracket
- Concealed Screw Installation
- Mounting Hardware Included

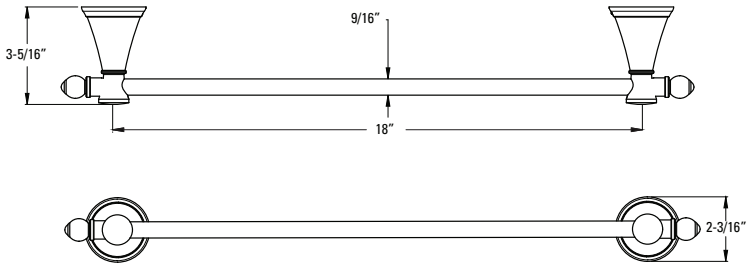

24" Towel Bar

BTB-GL2C	Polished Chrome	3	$70
BTB-GL2K	Brushed Nickel	3	$84
BTB-GL2Y	Tuscan Bronze	3	$94

Holes: · 2-Hole

Features:
- All Metal Construction
- Standard Mounting Bracket
- Concealed Screw Installation
- Mounting Hardware Included

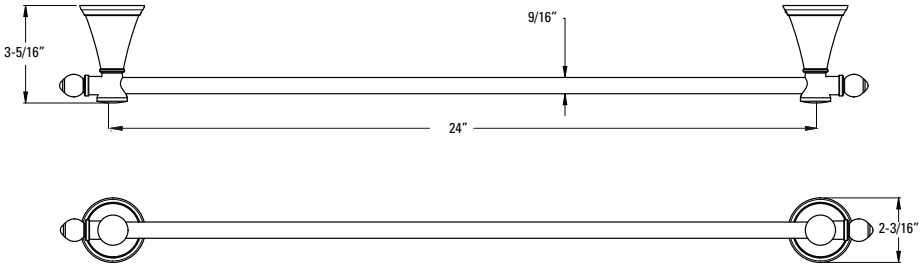

Towel Ring

BRB-GL1C	Polished Chrome	3	$46
BRB-GL1K	Brushed Nickel	3	$58
BRB-GL1Y	Tuscan Bronze	3	$70

Holes: · 1-Hole

Features:
- All Metal Construction
- Standard Mounting Bracket
- Concealed Screw Installation
- Mounting Hardware Included

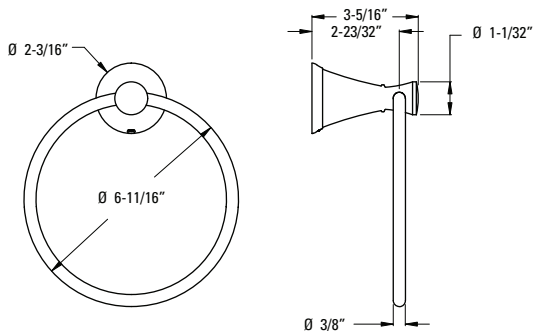

Paper Holder

Model	Finish	Case Qty	List Price
BPH-GL1C	Polished Chrome	3	$46
BPH-GL1K	Brushed Nickel	3	$58
BPH-GL1Y	Tuscan Bronze	3	$70

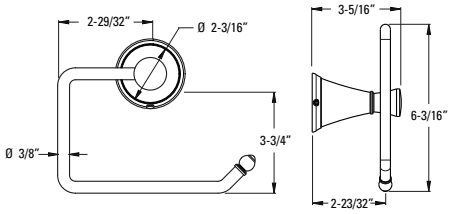

Technical Info

Holes: · 1-Hole

Features:
· All Metal Construction
· Standard Mounting Bracket
· Concealed Screw Installation
· Mounting Hardware Included

Robe Hook

BRH-GL1C	Polished Chrome	3	$27
BRH-GL1K	Brushed Nickel	3	$39
BRH-GL1Y	Tuscan Bronze	3	$52

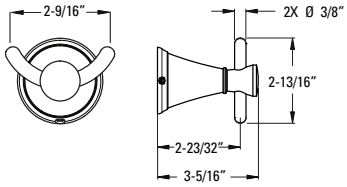

Holes: · 1-Hole

Features:
· All Metal Construction
· Standard Mounting Bracket
· Concealed Screw Installation
· Mounting Hardware Included

Avalon

Time honored qualities such as elegance, tradition and symmetry have been gracefully reflected in the Avalon Bath Collection. With smooth and sleek curves reminiscent of a seaside escape, it's no wonder the Avalon Collection is the perfect complement to any bath. We've made coordinating the look of your entire home as easy as asking for the Avalon Collection.

Single Control Lavatory
LG42-CB1C

4" Centerset Lavatory
LG48-CB1C

8" Widespread Lavatory
LG49-CB1C

Diverter Trim
Ø16-CB1C

Tub & Shower
LG89-8CBC

Shower Only
LG89-7CBC

Valve Only
R89-1CBC

3-Hole Roman Tub
RT6-5CB1C

Accessories

24" Towel Bar
BTB-CB2C

Towel Ring
BRB-CBØC

Paper Holder
BPH-CB1C

Robe Hook
BRH-CBØC

Single Control Lavatory

Model	Finish	Case Qty	List Price
LG42-CB1C	Polished Chrome	3	$193
LG42-CB1K	Brushed Nickel	3	$229
LG42-CB1Y	Tuscan Bronze	3	$259

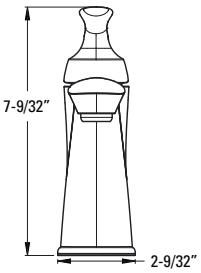

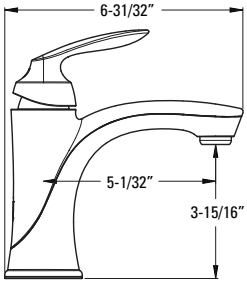

Technical Info

Holes: · 1 or 3 Hole 4" Installation

Features:
- Ceramic Disc Valve
- Metal Lever Handle
- High Arc Fixed Spout
- High Temperature Limit Stop
- Push & Seal Drain Included
- Drilled for Pop Up
- Optional Deck Plate, Order 961-146* and 974-278*
- Order 941-517* and 972-Ø22* for Optional Metal Drain
- 1.2 gpm @ 60 psi

4" Centerset Lavatory

LG48-CB1C	Polished Chrome	3	$183
LG48-CB1K	Brushed Nickel	3	$218
LG48-CB1Y	Tuscan Bronze	3	$248

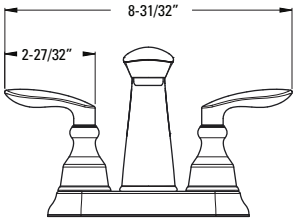

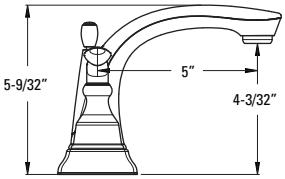

Holes: · 3-Hole 4" Installation

Features:
- Ceramic Disc Valves
- Metal Lever Handles
- High Arc Fixed Spout
- All Metal Pop Up
- 1.2 gpm @ 60 psi

8" Widespread Lavatory

LG49-CB1C	Polished Chrome	3	$278
LG49-CB1K	Brushed Nickel	3	$301
LG49-CB1Y	Tuscan Bronze	3	$393

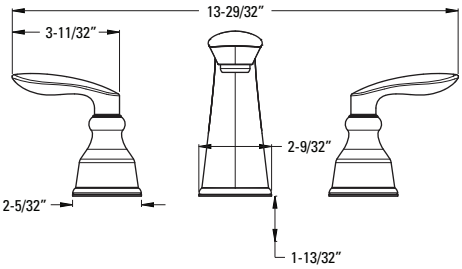

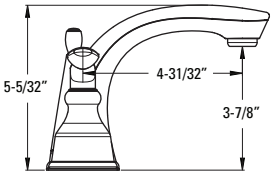

Holes: · 3-Hole 8-15" Installation

Features:
- Ceramic Disc Valves
- Metal Lever Handles
- High Arc Fixed Spout
- Quick Connect Hose Assembly
- All Metal Pop-Up
- Order 971-Ø86Ø to Increase Max. Install Depth to 3"
- 1.2 gpm @ 60 psi

CEC Compliant | Cal Green Compliant | Meets EPA WaterSense℠ Standards | NSF Lead-Free Certified | ADA Compliant | UltraSeal™ | SecurePfit™

	Model	Finish	Case Qty	List Price
Roman Tub Trim	RT6-5CB1C	Polished Chrome	3	$251
	RT6-5CB1K	Brushed Nickel	3	$305
	RT6-5CB1Y	Tuscan Bronze	3	$397

Technical Info

Holes: · 3-Hole

Features:
· Ceramic Disc Valves
· Metal Lever Handles
· High Arc Fixed Spout

Must Order ØX6-Ø5ØR or ØX6-15ØR Rough In Valve Separately. See Valve Section.

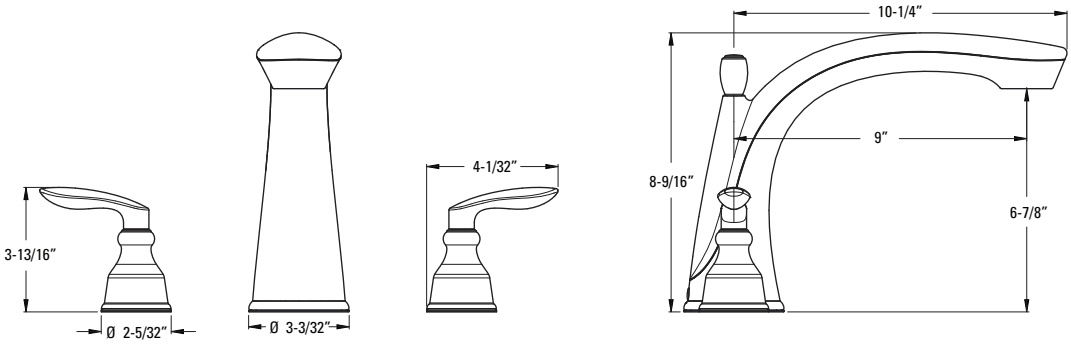

CEC Compliant | Cal Green Compliant | Meets EPA WaterSense℠ Standards | NSF Lead-Free Certified | ADA Compliant | UltraSeal™ | SecurePfit™

Pressure Balance Tub & Shower Trim

Model	Finish	Case Qty	List Price
LG89-8CBC	Polished Chrome	3	$122
LG89-8CBK	Brushed Nickel	3	$268
LG89-8CBY	Tuscan Bronze	3	$307

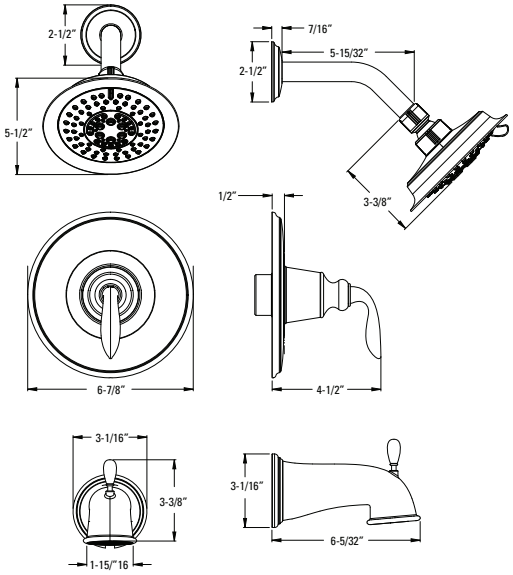

Technical Info

Features:
- SecurePfit™
- Metal Lever Handle
- Hot/Cold Indicator
- 5 Functions:
  - -Pentrating Massage
  - -Rain Spray
  - -Invigorating Spray
  - -Champagne/Raincan Combo
  - -Champagne Spray
- Easy To Clean Spray Nozzles
- IP & Quick Connect Diverted Tub Spout
- Order 941-Ø55Ø for 1.5 gpm
- Showerhead 1.8 gpm @ 80 psi

Must Order Pressure Balance Rough In Valve Separately. See Valve Section.

Pressure Balance Shower Trim

LG89-7CBC	Polished Chrome	3	$91
LG89-7CBK	Brushed Nickel	3	$236
LG89-7CBY	Tuscan Bronze	3	$279

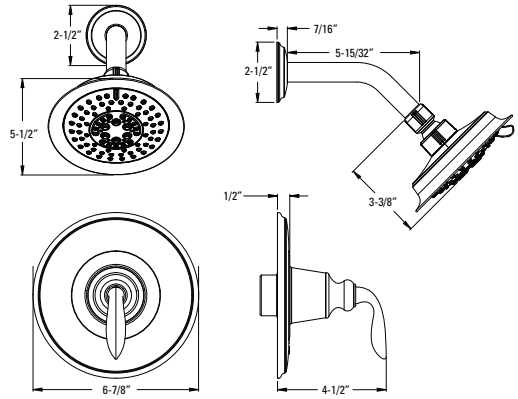

Features:
- SecurePfit™
- Metal Lever Handle
- Hot/Cold Indicator
- 5 Functions:
  - -Pentrating Massage
  - -Rain Spray
  - -Invigorating Spray
  - -Champagne/Raincan Combo
  - -Champagne Spray
- Easy To Clean Spray Nozzles
- Order 941-Ø55Ø for 1.5 gpm
- Showerhead 1.8 gpm @ 80 psi

Must Order Pressure Balance Rough In Valve Separately. See Valve Section.

CEC Compliant | Cal Green Compliant | Meets EPA WaterSense℠ Standards | NSF Lead-Free Certified | ADA Compliant | UltraSeal™ | SecurePfit™

Pressure Balance Valve Only Trim

Model	Finish	Case Qty	List Price
R89-1CBC	Polished Chrome	3	$60
R89-1CBK	Brushed Nickel	3	$133
R89-1CBY	Tuscan Bronze	3	$164

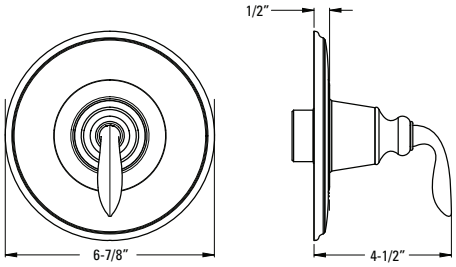

Technical Info

Features:
- SecurePfit™
- Metal Lever Handle
- Hot/Cold Indicator

Must Order Pressure Balance Rough In Valve Separately. See Valve Section.

Diverter Trim Only

Ø16-CB1C	Polished Chrome	3	$73
Ø16-CB1K	Brushed Nickel	3	$103
Ø16-CB1Y	Tuscan Bronze	3	$135

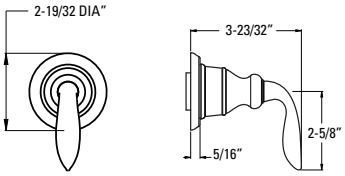

Features:
- Secure Pfit™
- Metal Lever Handle and Matching Flange
- Can be used with Ø15-2WDX for Cal Green Compliant applications

Must Order Ø15-4WDX or Ø15-2WDX Rough In Valve Separately. See Valve Section.

24" Towel Bar

Model	Finish	Case Qty	List Price
BTB-CB2C	Polished Chrome	4	$61
BTB-CB2K	Brushed Nickel	4	$90
BTB-CB2Y	Tuscan Bronze	4	$90

Technical Info

Holes: · 2-Hole

Features:
- All Metal Construction
- Superior Mounting Posts
- Concealed Screw Installation
- Mounting Hardware Included

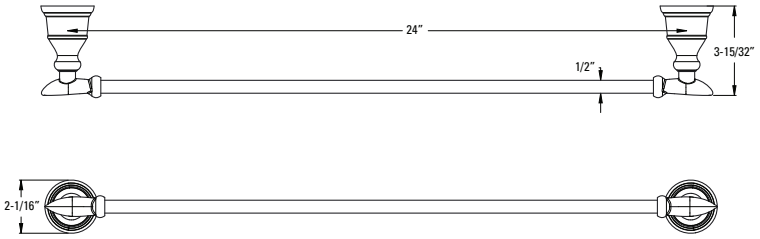

Towel Hook

BRB-CBØC	Polished Chrome	4	$44
BRB-CBØK	Brushed Nickel	4	$65
BRB-CBØY	Tuscan Bronze	4	$65

Holes: · 1-Hole

Features:
- All Metal Construction
- Superior Mounting Posts
- Concealed Screw Installation
- Mounting Hardware Included

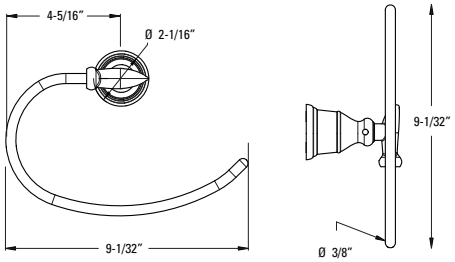

Paper Holder

BPH-CB1C	Polished Chrome	4	$46
BPH-CB1K	Brushed Nickel	4	$69
BPH-CB1Y	Tuscan Bronze	4	$69

Holes: · 1-Hole

Features:
- All Metal Construction
- Superior Mounting Posts
- Concealed Screw Installation
- Mounting Hardware Included

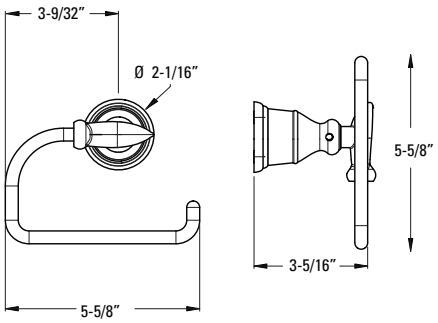

Robe Hook

Model	Finish	Case Qty	List Price
BRH-CBØC	Polished Chrome	4	$29
BRH-CBØK	Brushed Nickel	4	$39
BRH-CBØY	Tuscan Bronze	4	$39

Technical Info

Holes: · 1-Hole

Features:
- All Metal Construction
- Superior Mounting Posts
- Concealed Screw Installation
- Mounting Hardware Included

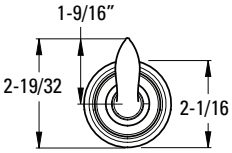

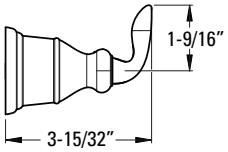

Arkitek

This sleek faucet is sculpted with a forward stance to travel down the path of new possibilities. The metropolitan design has been refined and tailored to interact harmoniously with countless environments. The faucet offers a beautiful contrast of clean modern elegance and stirring visual angularity. Intended to quietly add design momentum to interior surroundings.

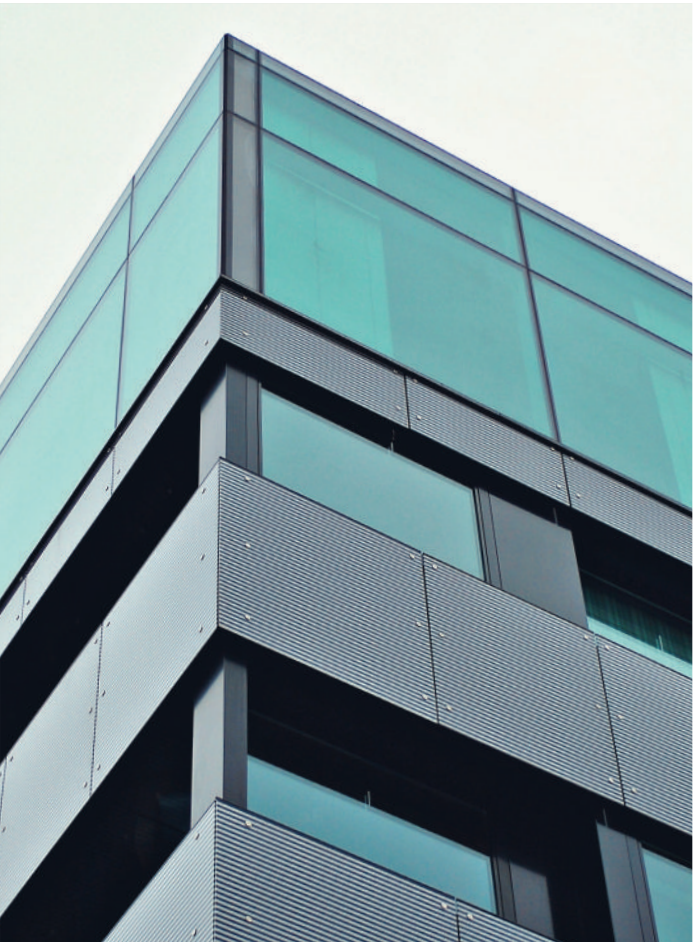

Single Control Lavatory
LG42-LPMC

8" Widespread Lavatory
LG49-LPMC

3-Hole Roman Tub
RT6-5LPMC

Tub & Shower
LG89-8LPMC

Shower Only
LG89-7LPMC

Valve Only
R89-1LPMC

Accessories

18" & 24" Towel Bar
BTB-DA1C & BTB-DA2C

Towel Ring
BRB-DA1C

Paper Holder
BPH-DA1C

Robe Hook
BRH-DA1C

Single Control Lavatory

Model	Finish	Case Qty	List Price
LG42-LPMC	Polished Chrome	3	$193
LG42-LPMK	Brushed Nickel	3	$229

Technical Info

Holes: · 1 or 3-Hole 4" Installation

Features:
- Ceramic Disc Valve with Temp Limit Stop
- Metal Lever Handle
- 3-Hole Deckplate Sold Separately 961-191*
- Push and Seal Drain Included
- Order 941-411* and 972-Ø22* for Optional Metal Drain
- 1.2 gpm @ 60 psi

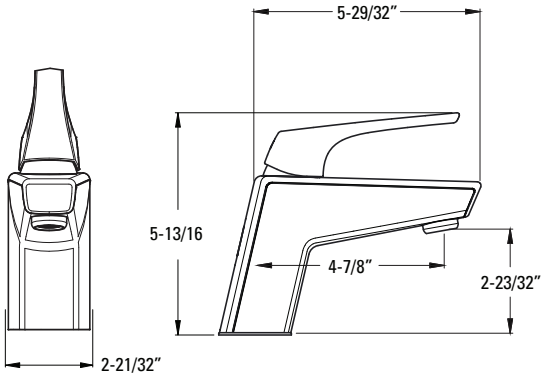

8" Widespread Lavatory

LG49-LPMC	Polished Chrome	3	$278
LG49-LPMK	Brushed Nickel	3	$301

Holes: · 3-Hole 8-15" Installation

Features:
- Ceramic Disc Valves
- Metal Lever Handles
- Fixed Spout
- Quick Connect Hose Assembly
- All Metal Pop-Up
- Order 971-Ø89Ø to Increase Max. Install Depth to 3"
- 1.2 gpm @ 60 psi

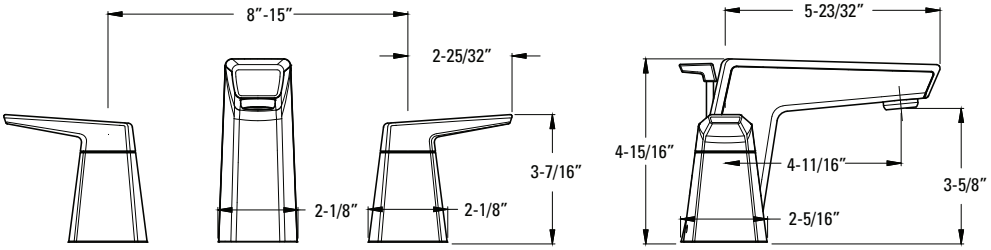

CEC Compliant · Cal Green Compliant · Meets EPA WaterSense℠ Standards · NSF Lead-Free Certified · ADA Compliant · UltraSeal™ · SecurePfit™

	Model	Finish	Case Qty	List Price
3-Hole Roman Tub Trim	RT6-5LPMC	Polished Chrome	3	$248
	RT6-5LPMK	Brushed Nickel	3	$301

Technical Info

Holes: · 3-Hole

Features:
· Ceramic Disc Valves
· Metal Lever Handles
· Fixed Spout

Must Order ØX6-Ø5ØR or ØX6-15ØR Rough In Valve Separately. See Valve Section.

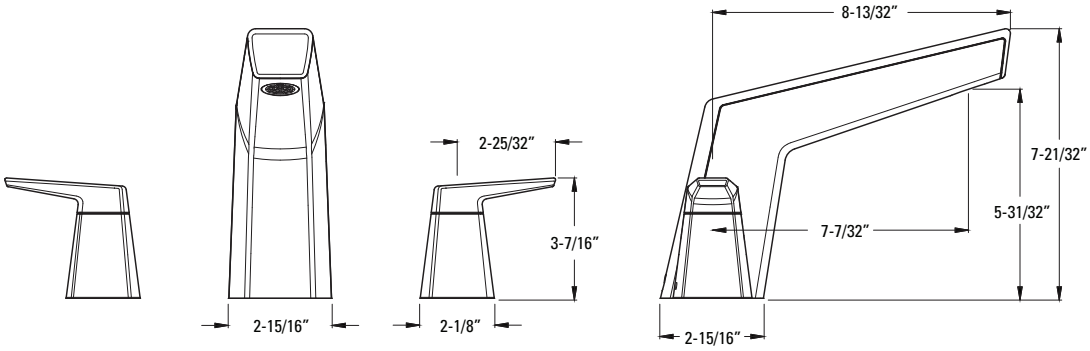

Pressure Balance Tub & Shower Trim

Model	Finish	Case Qty	List Price
LG89-8LPMC	Polished Chrome	3	$122
LG89-8LPMK	Brushed Nickel	3	$268

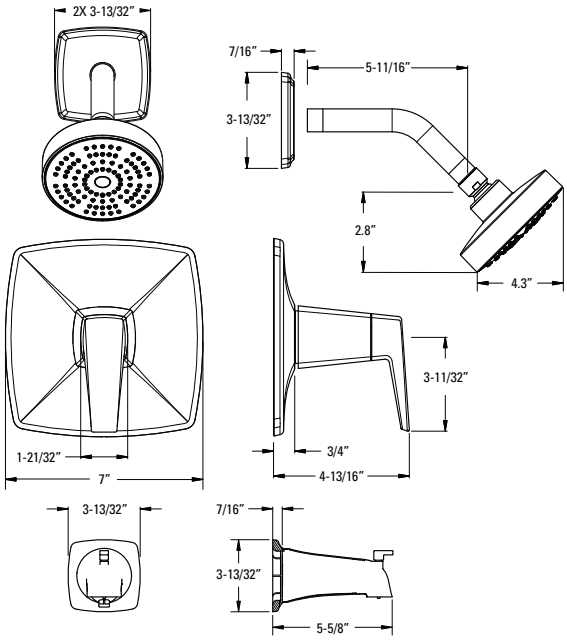

Technical Info

Features:
- SecurePfit™
- Metal Lever Handle
- Hot/Cold Indicator
- Decorative Showerhead
- Easy To Clean Spray Nozzles
- IP & Quick Connect Diverted Tub Spout
- Order 941-Ø55Ø for 1.5 gpm Showerhead Insert
- Showerhead 1.8 gpm @ 80 psi

Must Order Pressure Balance Rough In Valve Separately. See Valve Section.

Pressure Balance Shower Trim

LG89-7LPMC	Polished Chrome	3	$91
LG89-7LPMK	Brushed Nickel	3	$236

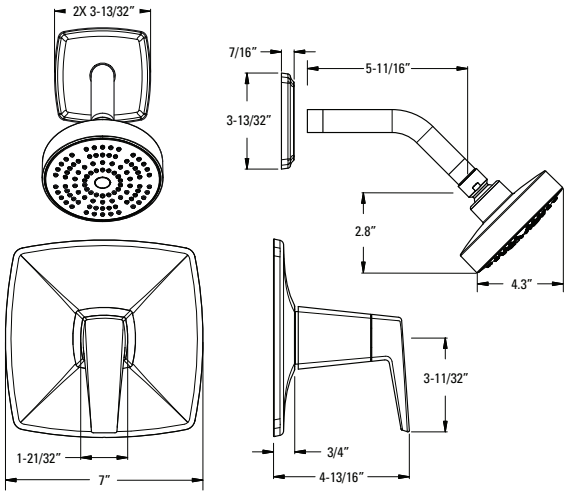

Features:
- SecurePfit™
- Metal Lever Handle
- Hot/Cold Indicator
- Decorative Showerhead
- Easy To Clean Spray Nozzles
- Order 941-Ø55Ø for 1.5 gpm Showerhead Insert
- Showerhead 1.8 gpm @ 80 psi

Must Order Pressure Balance Rough In Valve Separately. See Valve Section.

	Model	Finish	Case Qty	List Price
Pressure Balance Valve Only Trim	R89-1LPMC	Polished Chrome	3	$73
	R89-1LPMK	Brushed Nickel	3	$97

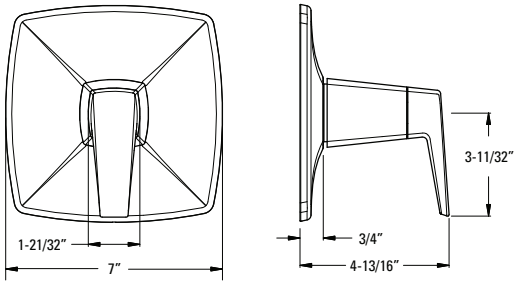

Technical Info

Features:
- SecurePfit™
- Metal Lever Handle
- Hot/Cold Indicator

Must Order Pressure Balance Rough In Valve Separately. See Valve Section.

18" Towel Bar

Model	Finish	Case Qty	List Price
BTB-DA1C	Polished Chrome	3	$62
BTB-DA1K	Brushed Nickel	3	$67

Technical Info

Holes: · 2-Hole

Features:
- All Metal Construction
- Standard Mounting Brackets
- Concealed Screw Installation
- Mounting Hardware Included

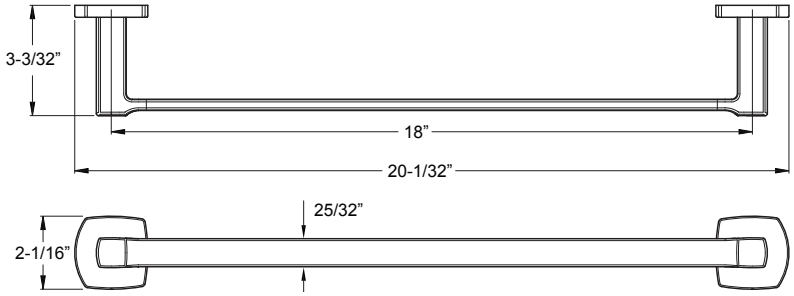

24" Towel Bar

BTB-DA2C	Polished Chrome	3	$64
BTB-DA2K	Brushed Nickel	3	$69

Holes: · 2-Hole

Features:
- All Metal Construction
- Standard Mounting Brackets
- Concealed Screw Installation
- Mounting Hardware Included

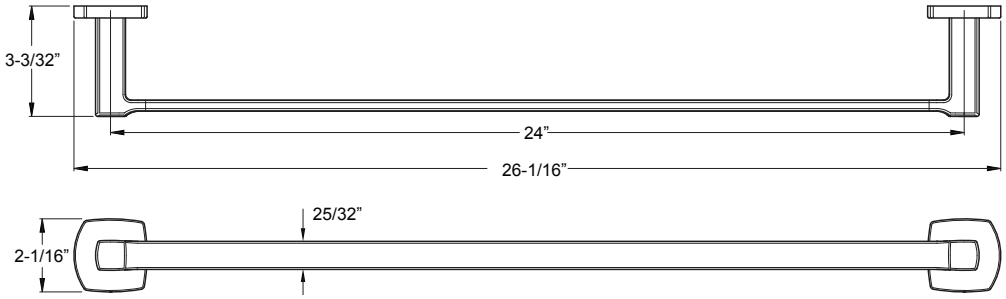

Towel Ring

BRB-DA1C	Polished Chrome	3	$44
BRB-DA1K	Brushed Nickel	3	$47

Holes: · 1-Hole

Features:
- All Metal Construction
- Standard Mounting Brackets
- Concealed Screw Installation
- Mounting Hardware Included

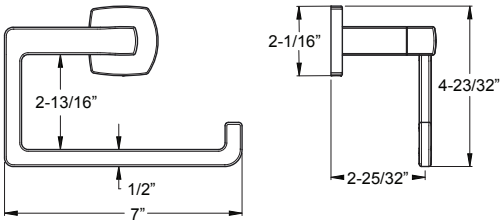

Paper Holder

Model	Finish	Case Qty	List Price
BPH-DA1C	Polished Chrome	3	$52
BPH-DA1K	Brushed Nickel	3	$60

Technical Info

Holes: · 2-Hole

Features:
· All Metal Construction
· Standard Mounting Brackets
· Concealed Screw Installation
· Mounting Hardware Included

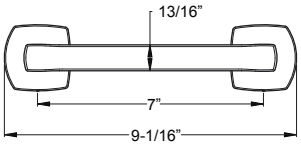

Robe Hook

BRH-DA1C	Polished Chrome	3	$34
BRH-DA1K	Brushed Nickel	3	$38

Holes: · 1-Hole

Features:
· All Metal Construction
· Standard Mounting Brackets
· Concealed Screw Installation
· Mounting Hardware Included

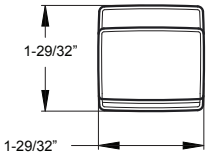

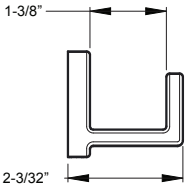

Weller

The Weller line of lavatory fixtures is the new standard for transitional style. With a blend of the best features from both modern and traditional elements, Weller is a complete line of faucets that is refined and well balanced. Gracefully arced spouts and angled handles work together to complement a wide range of décor, making Weller the ideal selection for those who want to update or upgrade their bathroom.

Single Control Lavatory
LG42-WRØC

4" Centerset Lavatory
LG48-WRØC

8" Widespread Lavatory
LG49-WRØC

3-Hole Roman Tub
RT6-5WRC

Tub & Shower
LG89-8WRC

Shower Only
LG89-7WRC

Valve Only
R89-1WRC

Accessories

18" Towel Bar
BTB-GL1C

24" Towel Bar
BTB-GL2C

Towel Ring
BRB-GL1C

Paper Holder
BPH-GL1C

Robe Hook
BRH-GL1C

Single Control Lavatory

Model	Finish	Case Qty	List Price
LG42-WRØC	Polished Chrome	3	$158
LG42-WRØK	Brushed Nickel	3	$193
LG42-WRØY	Tuscan Bronze	3	$224

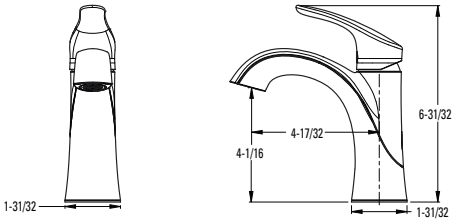

Technical Info

Holes: · 1 or 3-Hole 4" Installation

Features:
- Ceramic Disc Valve
- Metal Lever Handle
- High Arc Fixed Spout
- High Temperature Limit Stop
- 3-Hole Deckplate Sold Separately 961-218* and 974-446*
- Push & Seal Drain Included
- Order 972-Ø22* and 941-621* For Optional Metal Drain
- Drilled for Pop Up
- 1.2 gpm @ 60 psi

4" Centerset Lavatory

LG48-WRØC	Polished Chrome	3	$141
LG48-WRØK	Brushed Nickel	3	$164
LG48-WRØY	Tuscan Bronze	3	$193

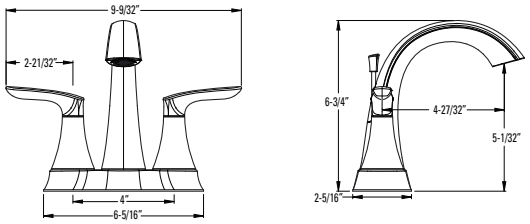

Holes: · 3-Hole 4" Installation

Features:
- Washerless Cartridge
- Metal Lever Handles
- High Arc Fixed Spout
- All Metal Pop-Up
- Washerless Cartridge
- 1.2 gpm @ 60 psi

8" Widespread Lavatory

LG49-WRØC	Polished Chrome	3	$229
LG49-WRØK	Brushed Nickel	3	$271
LG49-WRØY	Tuscan Bronze	3	$331

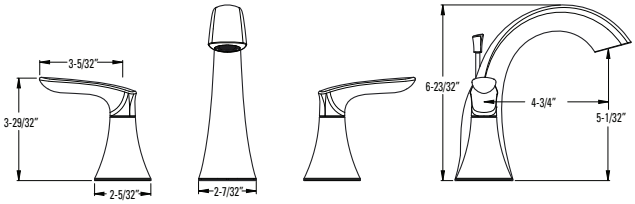

Holes: · 3-Hole 8-15" Installation

Features:
- Ceramic Disc Valves
- Metal Lever Handles
- High Arc Fixed Spout
- Quick Connect Hose Assembly
- All Metal Pop-Up
- Order 971-Ø26Ø to Increase Max. Install Depth to 3"
- 1.2 gpm @ 60 psi

CEC Compliant · Cal Green Compliant · Meets EPA WaterSense℠ Standards · NSF Lead-Free Certified · ADA Compliant · UltraSeal™ · SecurePfit™

3-Hole Roman Tub Trim

Model	Finish	Case Qty	List Price
RT6-5WRC	Polished Chrome	3	$218
RT6-5WRK	Brushed Nickel	3	$259
RT6-5WRY	Tuscan Bronze	3	$320

Technical Info

Holes: · 3-Hole

Features:
· Ceramic Disc Valves
· Metal Lever Handles
· High Arc Fixed Spout

Must Order ØX6-Ø5ØR or ØX6-15ØR Rough In Valve Separately. See Valve Section.

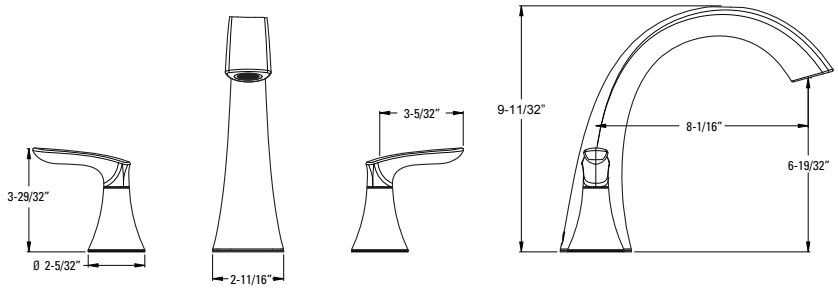

Pressure Balance Tub & Shower Trim

Model	Finish	Case Qty	List Price
LG89-8WRC	Polished Chrome	3	$103
LG89-8WRK	Brushed Nickel	3	$175
LG89-8WRY	Tuscan Bronze	3	$212

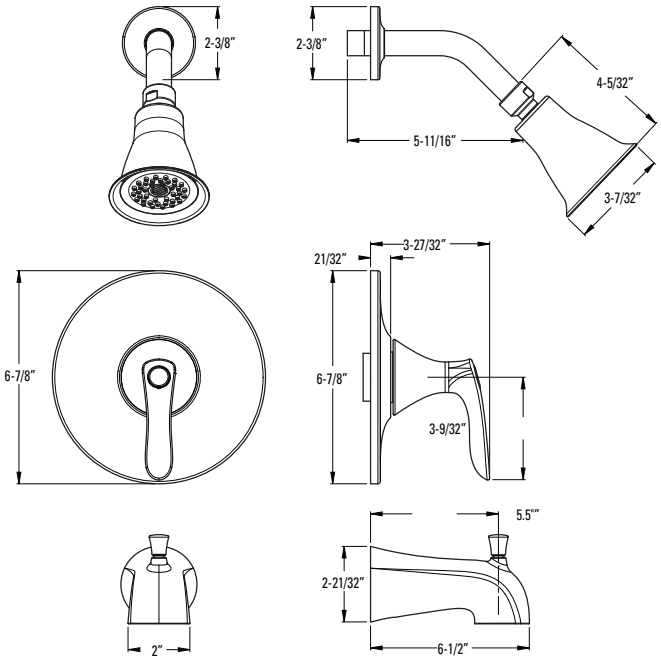

Technical Info

Features:
- Quick Trim™ Wall Flange
- Metal Lever Handle
- Hot/Cold Indicator
- Easy To Clean Spray Nozzles
- IP & Quick Connect Diverted Tub Spout
- Order 941-Ø55 for 1.5 gpm Showerhead Insert
- Showerhead 1.8 gpm @ 80 psi

Must Order Pressure Balance Rough In Valve Separately. See Valve Section.

Pressure Balance Shower Trim

LG89-7WRC	Polished Chrome	3	$81
LG89-7WRK	Brushed Nickel	3	$141
LG89-7WRY	Tuscan Bronze	3	$169

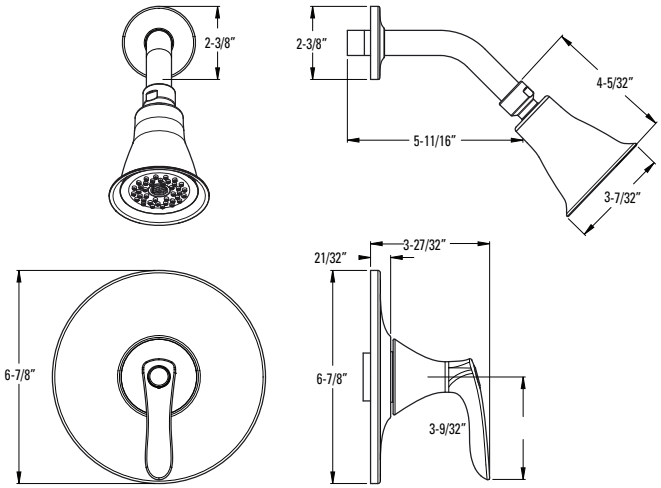

Features:
- Quick Trim™ Wall Flange
- Metal Lever Handle
- Hot/Cold Indicator
- Easy To Clean Spray Nozzles
- Order 941-Ø55 for 1.5 gpm Showerhead Insert
- Showerhead 1.8 gpm @ 80 psi

Must Order Pressure Balance Rough In Valve Separately. See Valve Section.

Pressure Balance Valve Only Trim

Model	Finish	Case Qty	List Price
R89-1WRC	Polished Chrome	3	$56
R89-1WRK	Brushed Nickel	3	$91
R89-1WRY	Tuscan Bronze	3	$122

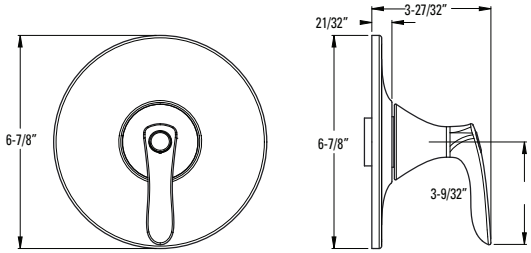

Technical Info

Features:
- Quick Trim™ Wall Flange
- Metal Lever Handle
- Hot/Cold Indicator

Must Order Pressure Balance Rough In Valve Separately. See Valve Section.

18" Towel Bar

Model	Finish	Case Qty	List Price
BTB-GL1C	Polished Chrome	3	$65
BTB-GL1K	Brushed Nickel	3	$77
BTB-GL1Y	Tuscan Bronze	3	$89

Technical Info

Holes: · 2-Hole

Features:
- All Metal Construction
- Standard Mounting Bracket
- Concealed Screw Installation
- Mounting Hardware Included

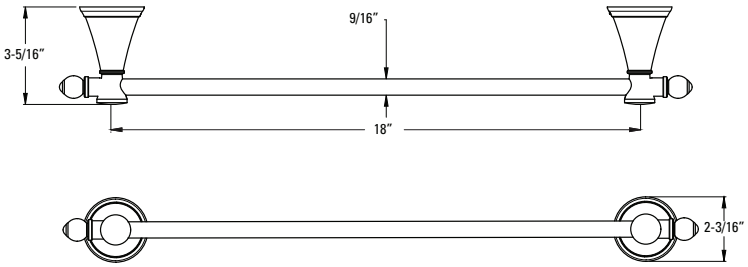

24" Towel Bar

BTB-GL2C	Polished Chrome	3	$70
BTB-GL2K	Brushed Nickel	3	$84
BTB-GL2Y	Tuscan Bronze	3	$94

Holes: · 2-Hole

Features:
- All Metal Construction
- Standard Mounting Bracket
- Concealed Screw Installation
- Mounting Hardware Included

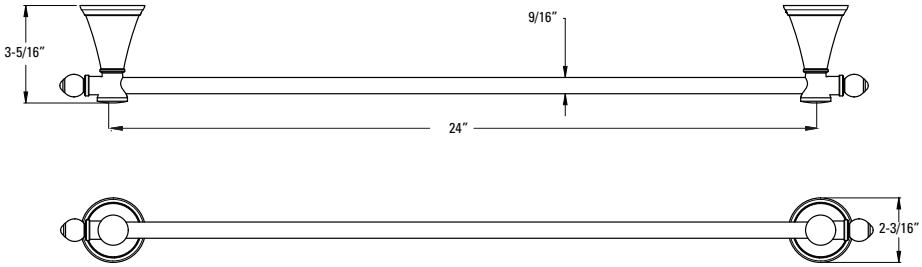

Towel Ring

BRB-GL1C	Polished Chrome	3	$46
BRB-GL1K	Brushed Nickel	3	$58
BRB-GL1Y	Tuscan Bronze	3	$70

Holes: · 1-Hole

Features:
- All Metal Construction
- Standard Mounting Bracket
- Concealed Screw Installation
- Mounting Hardware Included

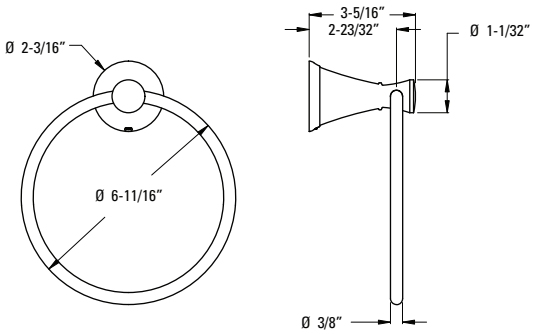

Paper Holder

Model	Finish	Case Qty	List Price
BPH-GL1C	Polished Chrome	3	$46
BPH-GL1K	Brushed Nickel	3	$58
BPH-GL1Y	Tuscan Bronze	3	$70

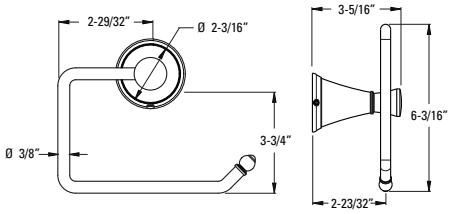

Technical Info

Holes: · 1-Hole

Features:
· All Metal Construction
· Standard Mounting Bracket
· Concealed Screw Installation
· Mounting Hardware Included

Robe Hook

BRH-GL1C	Polished Chrome	3	$27
BRH-GL1K	Brushed Nickel	3	$39
BRH-GL1Y	Tuscan Bronze	3	$52

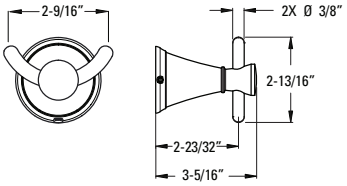

Holes: · 1-Hole

Features:
· All Metal Construction
· Standard Mounting Bracket
· Concealed Screw Installation
· Mounting Hardware Included

Parisa

Sleek European styling and a dramatic high-arc spout distinguish the Parisa single control faucet. With the clean, sleek lines, its modern styling is a perfect match for any decor. Unparalleled functionality. Uncompromised style.

Single Control Lavatory
LG42-AMCC

Tub & Shower
LG89-8SRC
Shower Only
LG89-7SRC

Accessories

24" Towel Bar
BTB-R2CC

Towel Ring
BRB-RØCC

Paper Holder
BPH-RØCC

Robe Hook
BRH-RØCC

	Model	Finish	Case Qty	List Price
Single Control Lavatory	LG42-AMCC	Polished Chrome	3	$161
	LG42-AMCK	Brushed Nickel	3	$225

Technical Info

Holes: · 1 or 3-Hole 4" Installation

Features:
- Ceramic Disc Valve
- Metal Lever Handle
- Fixed Spout
- Installs with or Without Deckplate
- All Metal Pop-Up
- 1.2 gpm @ 60 psi

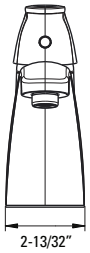

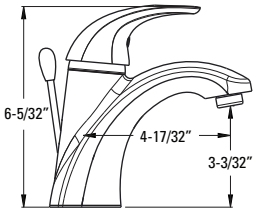

Single Control Lavatory	LG42-ANCC	Polished Chrome	3	$146

Holes: · 1 or 3-Hole 4" Installation

Features:
- Ceramic Disc Valve
- Metal Lever Handle
- Fixed Spout
- Installs with or Without Deckplate
- Less Drain Assembly
- Grid Strainer Sold Separately
- 1.2 gpm @ 60 psi

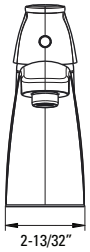

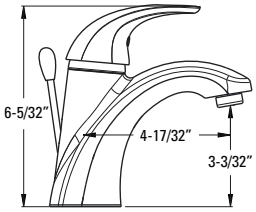

SHOWROOM PREFERRED

Universal Grid Strainer	972-104A	Polished Chrome	6	$51

Features:
- All Metal Grid Strainer
- With Overflow
- 1 1/4" Tailpiece

SHOWROOM PREFERRED

Universal Grid Strainer	972-103A	Polished Chrome	6	$51

Features:
- All Metal Grid Strainer
- No Overflow
- 1 1/4" Tailpiece

CEC Compliant · Cal Green Compliant · Meets EPA WaterSense℠ Standards · NSF Lead-Free Certified · ADA Compliant · UltraSeal™ · SecurePfit™

	Model	Finish	Case Qty	List Price
Pressure Balance Tub & Shower Trim	LG89-8SRC	Polished Chrome	3	$86

Technical Info

Features:
- Quick Trim™ Wall Flange
- Metal Lever Handle
- Hot/Cold Indicator
- Bell Showerhead
- Easy To Clean Spray Nozzles
- Quick Connect Metal Diverted Tub Spout
- Order 941-Ø55Ø for 1.5 gpm Showerhead Insert
- Showerhead 1.8 gpm @ 80 psi

Must Order Pressure Balance Rough In Valve Separately. See Valve Section.

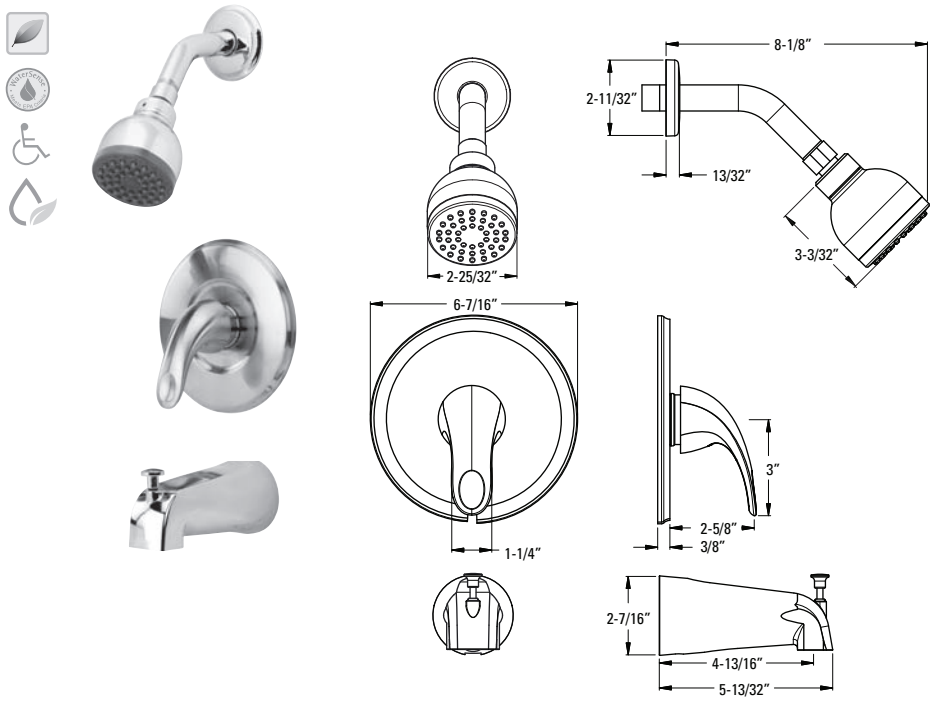

	Model	Finish	Case Qty	List Price
Pressure Balance Shower Trim	LG89-7SRC	Polished Chrome	3	$65

Features:
- Quick Trim™ Wall Flange
- Metal Lever Handle
- Hot/Cold Indicator
- Bell Showerhead
- Easy To Clean Spray Nozzles
- Order 941-Ø55Ø for 1.5 gpm Showerhead Insert
- Showerhead 1.8 gpm @ 80 psi

Must Order Pressure Balance Rough In Valve Separately. See Valve Section.

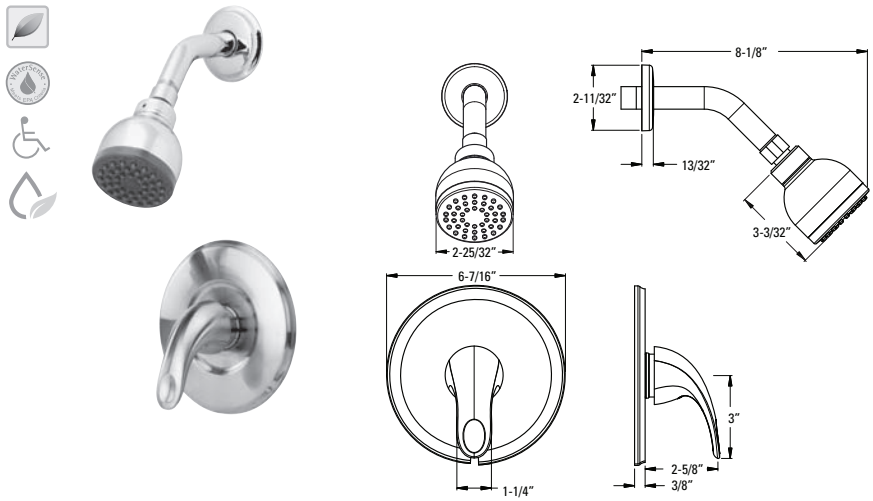

CEC Compliant | Cal Green Compliant | Meets EPA WaterSense℠ Standards | NSF Lead-Free Certified | ADA Compliant | UltraSeal™ | SecurePfit™

24" Towel Bar

Model	Finish	Case Qty	List Price
BTB-R2CC	Polished Chrome	6	$37
BTB-R2KK	Brushed Nickel	6	$51

Technical Info

Holes: · 2-Hole

Features:
- All Metal Construction
- Standard Mounting Bracket
- Concealed Screw Installation
- Mounting Hardware Included

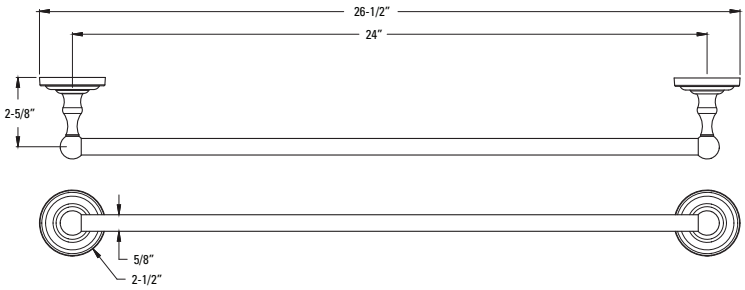

Towel Ring

BRB-RØCC	Polished Chrome	6	$23
BRB-RØKK	Brushed Nickel	6	$30

Holes: · 1-Hole

Features:
- All Metal Construction
- Standard Mounting Bracket
- Concealed Screw Installation
- Mounting Hardware Included

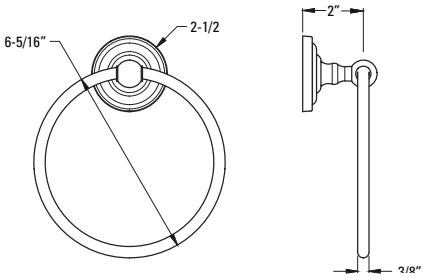

Paper Holder

BPH-RØCC	Polished Chrome	6	$25
BPH-RØKK	Brushed Nickel	6	$32

Holes: · 2-Hole

Features:
- All Metal Construction
- Standard Mounting Bracket
- Concealed Screw Installation
- Mounting Hardware Included

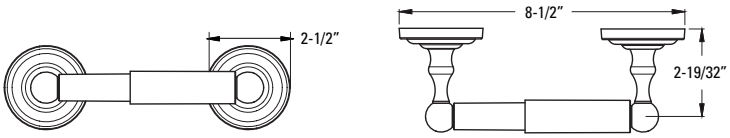

Robe Hook

BRH-RØCC	Polished Chrome	6	$14
BRH-RØKK	Brushed Nickel	6	$15

Holes: · 1-Hole

Features:
- All Metal Construction
- Standard Mounting Bracket
- Concealed Screw Installation
- Mounting Hardware Included

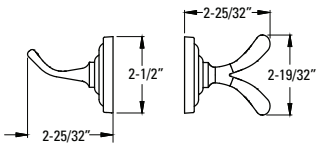

Extension Kits

The devil is in the details. We understand that every installation scenario varies from the next. That's why our engineers think of solutions that will make your specific installation a breeze. You're welcome.

Tub & Shower Extension Kits

Available As Parts	Description	Handle Compatability	Finish	Part No.	List Price
Ø8 Secure Pfit Ext. Kit	For ØX8 Secure Pfit Trims	For Use with ØX8 Requires 1 Kit per Valve Body	Unfinished	97Ø-Ø83Ø	$51
Ø15 Series Ext. Kit	Ø15-XWDX Ext. Kit	For Use with Ø15-2WDX and Ø15-4WDX	Unfinished	97Ø-Ø89Ø	$109
Ø8 & Ø9 Series 1" Ext. Kit	For Single Control Valve Bodies, Pressure Balanced and Mixing, Utilizing Quick Trim System.	For Use with Round Acrylic, Loop, Round Crystal, Cross, Deco Lever and Genesis Lever Handles. Requires One Kit per Valve Body. **Does Not Work with SecurePfit Trims**	Polished Chrome	91Ø-563A	$24
			Brushed Nickel	91Ø-563K	$29
			Tuscan Bronze	91Ø-563Y	$42
			Rustic Bronze	91Ø-563U	$57.10
Ø1 Series 1" Ext. Kit	For Three-Handle Mixing Valve Bodies Utilizing Ceramic Disc Valves Includes Stem Extensions, Sleeve Extensions and Screw Adapters.	For Use with Acrylic Windsor, Metal Verve, Round Acrylic, Deco Lever, French Lever and Cross Handles. Requires One Kit per Valve Body.	Unfinished	91Ø-ØØ5Ø	$86
	For Two or Three-Handle Mixing Valve Bodies Utilizing Compression Valves. Includes Stem Extensions, Sleeve Extensions and Screw Adapters.	For Use with Acrylic Windsor, Metal Verve, Round Acrylic, Deco Lever, French Lever and Cross Handles. Requires One Kit per Handle.	Unfinished	91Ø-862Ø	$23
		For Use with Classic Windsor and Classic Verve Handles. Requires One Kit per Handle.	Unfinished	91Ø-561Ø	$16.43
Ø3, Ø5 & Ø7 Series 1" Ext. Kit	For Two-Handle Mixing Valve Bodies Utilizing Ceramic Disc Valves. Includes Stem Extensions, Sleeve Extensions, Screw Adapters.	For Use with Acrylic Windsor, Metal Verve, Round Acrylic, Deco Lever, French Lever and Cross Handles. Requires One Kit per Valve Body.	Unfinished	91Ø-ØØ7Ø	$45
	For Two or Three-Handle Mixing Valve Bodies Utilizing Compression Valves. Includes Stem Extensions, Sleeve Extensions and Screw Adapters.	For Use with Acrylic Windsor, Metal Verve, Round Acrylic, Deco Lever, French Lever and Cross Handles. Requires One Kit per Handle.	Unfinished	91Ø-862Ø	$23
	For Two or Three-Handle Mixing Valve Bodies Utilizing Compression Valves. Includes Stem Extensions, Sleeve Extensions and Screw Adapters.	For Use with Classic Windsor and Classic Verve Handles. Requires One Kit per Handle.	Unfinished	91Ø-561Ø	$16.43
LG6 Tub Filler 4" Ext. Kit	Traditional Tub Filler 4" Ext. Kit	For Use with LG6-1TF* Tub Filler	Polished Chrome	91Ø-Ø62A	$135
			Polished Nickel	91Ø-Ø62D	$160
			Brushed Nickel	91Ø-Ø62J	$160
			Tuscan Bronze	91Ø-Ø62Y	$180

	Model	Finish	Case Qty	List Price	Technical Info
Roman Tub Extension Kit	974-375Ø	N/A	1	$45	**Features:** · 1" Extension Kit for Roman Tub Ceramic Valve Bodies · Must Order 2 Per Roman Tub Valve · For Two Handled Roman Tubs
Roman Tub Extension Kit Spout Shank	975-Ø15Ø	N/A	1	$21	**Features:** · 4 1/2" Max. Depth Spout Shank · 1 Shank Needed Per Valve
Widespread Extension Kit	971-Ø86Ø	N/A	1	$74	**Features:** · 1" Extension Kit for Widespread Ceramic Valve Bodies · Kit Includes Two Extensions (for Hot and Cold Valve Bodies) · Does Not Work with Pfirst Series Widespreads
19 Series Extension Kit	Ø19-AKØØ	N/A	12	$24	**Features:** · ABS Extension Kit for 19-21Ø* Waste and Overflow

Tub Filler and Widespread Extension Kits & Accessories

Tub Filler Extension Kit

Model	Finish	Case Qty	List Price
91Ø-Ø62A	Polished Chrome	1	$135
91Ø-Ø62D	Polished Nickel	1	$160
91Ø-Ø62J	Brushed Nickel	1	$160
91Ø-Ø62Y	Tuscan Bronze	1	$180

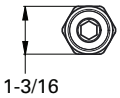

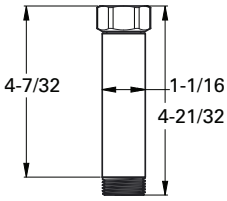

Technical Info

Features:
- 4" Extension
- All Metal Construction
- To Be Used with Traditional Double Riser Free-Standing Tub Filler with Hand Shower LG6-1TF*

Multi-Handle

With over 100 years of experience creating high quality faucets and accessories that deliver exceptional value, style and innovation, Pfister is a trusted name and leader in the plumbing industry. We've been at this for a long time ... and know that some of you have too. It's cool. We still answer to Price Pfister.

	Model	Finish	Case Qty	List Price
Three-Handle Tub & Shower	LGØ1-311Ø	Polished Chrome	4	$198

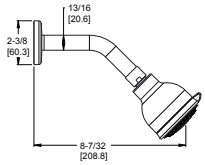

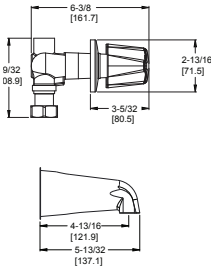

Technical Info

Holes: · 3-Hole 8" Installation

Features:
- 1/2" Union Inlets and 1/2" IP Outlets
- Union Nuts Included
- Three-Function WaterSense™ Showerhead
- Metal Handles, Flanges, Showerhead and Tub Spout
- 5" IP Threaded Non-Diverting Tub Spout
- Ceramic Disc Valves
- 1.8 gpm @ 80 psi

Valve Included. No Additional Valving Needed.

Three-Handle Tub & Shower	LGØ1-321Ø	Polished Chrome	4	$226

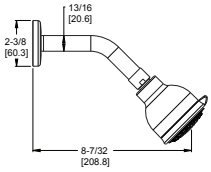

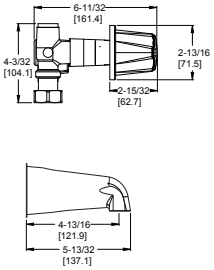

Holes: · 3-Hole 8" Installation

Features:
- 1/2" Union Inlets and 1/2" IP Outlets with By-Pass and Nipple Connection Bodies
- Union Nuts Included
- Three-Function WaterSense™ Showerhead
- Metal Handles, Flanges, Showerhead and Tub Spout
- 5" IP Threaded Non-Diverting Tub Spout
- Ceramic Disc Valves
- 1.8 gpm @ 80 psi

Valve Included. No Additional Valving Needed.

Three-Handle Tub & Shower	LGØ1-341Ø	Polished Chrome	4	$258

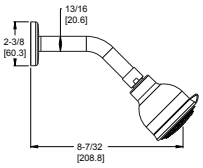

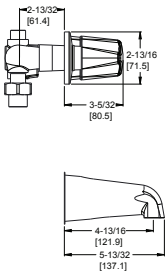

Holes: · 3-Hole 8" Installation

Features:
- 1/2" Union Inlets and 1/2" IP Outlets
- With Screwdriver Stops
- Union Nuts Included
- Three-Function WaterSense™ Showerhead
- Metal Handles, Flanges, Showerhead and Tub Spout
- 5" IP Threaded Non-Diverting Tub Spout
- Ceramic Disc Valves
- 1.8 gpm @ 80 psi

Valve Included. No Additional Valving Needed.

CEC Compliant · Cal Green Compliant · Meets EPA WaterSense℠ Standards · NSF Lead-Free Certified · ADA Compliant · UltraSeal™ · SecurePfit™

	Model	Finish	Case Qty	List Price
Three-Handle Tub & Shower	LGØ1-318Ø	Polished Chrome	4	$198

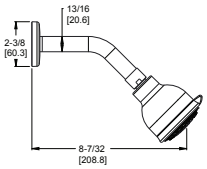

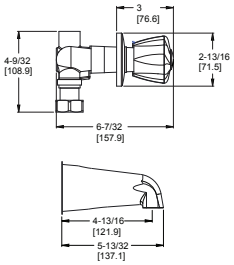

Technical Info

Holes: · 3-Hole 8" Installation

Features:
- 1/2" Union Inlets and 1/2" IP Outlets
- Union Nuts Included
- Three-Function WaterSense™ Showerhead
- Acrylic Handles, Flanges, Showerhead and Tub Spout
- 5" IP Threaded Non-Diverting Tub Spout
- Ceramic Disc Valves
- 1.8 gpm @ 80 psi

Valve Included. No Additional Valving Needed.

Three-Handle Tub & Shower	LGØ1-112Ø	Polished Chrome	4	$191

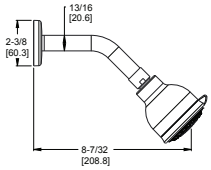

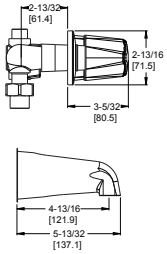

Holes: · 3-Hole 8" Installation

Features:
- 1/2" Copper Sweat Inlets and Outlets
- Three-Function WaterSense™ Showerhead
- Classic Verve Handles, Flanges, Showerhead and Tub Spout
- 5" IP Threaded Non-Diverting Tub Spout
- Compression Stems
- 1.8 gpm @ 80 psi

Valve Included. No Additional Valving Needed.

Three-Handle Tub & Shower	LGØ1-312Ø	Polished Chrome	4	$198

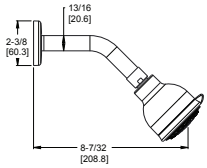

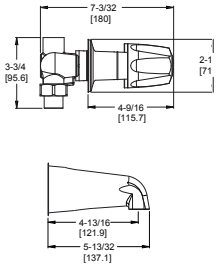

Holes: · 3-Hole 8" Installation

Features:
- 1/2" Union Inlets and 1/2" IP Outlets
- Union Nuts Included
- Three-Function WaterSense™ Showerhead
- Classic Verve Handles, Flanges, Showerhead and Tub Spout
- 5" IP Threaded Non-Diverting Tub Spout
- Compression Valves
- 1.8 gpm @ 80 psi

Valve Included. No Additional Valving Needed.

Three-Handle Tub & Shower	LGØ1-81BC	Polished Chrome	4	$267

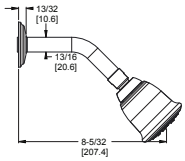

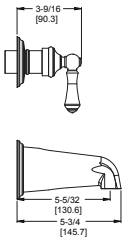

Holes: · 3-Hole 8" Installation

Features:
- Metal Lever Handles
- 5" IP Threaded Non-Diverting Tub Spout
- Three-Function WaterSense™ Showerhead
- 1.8 gpm @ 80 psi

Must Order Ø1-31XA Valve Seperately. See Valve Section.

CEC Compliant | Cal Green Compliant | Meets EPA WaterSense℠ Standards | NSF Lead-Free Certified | ADA Compliant | UltraSeal™ | SecurePfit™

	Model	Finish	Case Qty	List Price
Three-Handle Tub & Shower	LGØ1-8CBC	Polished Chrome	4	$276

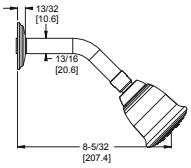

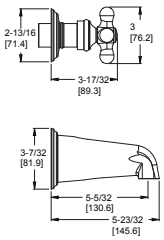

Technical Info

Holes: · 3-Hole 8" Installation

Features:
- Metal Cross Handles
- 5" IP Threaded Non-Diverting Tub Spout
- Three-Function WaterSense™ Showerhead
- 1.8 gpm @ 80 psi

Must Order Ø1-31XA Valve Seperately. See Valve Section.

Three-Handle Tub & Shower	LGØ1-8CPC	Polished Chrome	4	$256

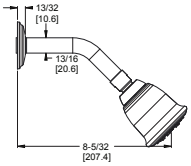

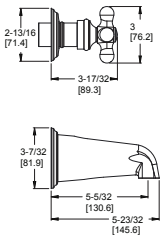

Holes: · 3-Hole 8" Installation

Features:
- Porcelain Cross Handles
- 5" IP Threaded Non-Diverting Tub Spout
- Three-Function WaterSense™ Showerhead
- 1.8 gpm @80 psi

Must Order Ø1-31XA Valve Seperately. See Valve Section.

	Model	Finish	Case Qty	List Price
Two-Handle Tub & Shower	LGØ3-611Ø	Polished Chrome	4	$194

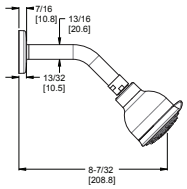

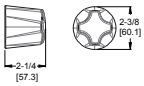

Technical Info

Holes: · 2-Hole 8" Installation

Features:
- 1/2" Union Inlets and 1/2" IP Outlets
- Union Nuts Included
- Three-Function WaterSense™ Showerhead
- Metal Handles, Flanges, Showerhead and Tub Spout
- Compression Valve
- 1.8 gpm @ 80 psi

Valve Included. No Additional Valving Needed.

Two-Handle Tub & Shower	LGØ3-612Ø	Polished Chrome	4	$194

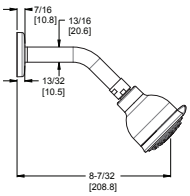

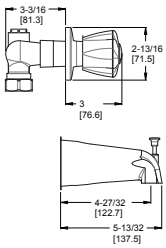

Holes: · 2-Hole 8" Installation

Features:
- Complete Valve and Trim
- 1/2" Union Inlets and 1/2" IP Outlets
- Union Nuts Included
- Classic Metal Verve Handles, Flanges, Showerhead and Tub Spout
- 5" IP Threaded Diverting Tub Spout
- Three-Function WaterSense™ Showerhead
- Compression Valve
- 1.8 gpm @ 80 psi

	Model	Finish	Case Qty	List Price
Two-Handle Shower	LGØ7-311Ø	Polished Chrome	4	$151

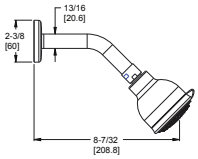

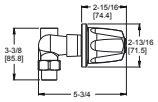

Technical Info

Holes: · 2-Hole 8" Installation

Features:
- Complete Valve and Trim
- 1/2" Union Inlets and 1/2" IP Outlets
- Union Nuts Included
- Three-Function WaterSense™ Showerhead
- Metal Handles, Flanges and Showerhead
- Ceramic Disc Valves
- 1.8 gpm @ 80 psi

Two-Handle Shower	LGØ7-312Ø	Polished Chrome	4	$151

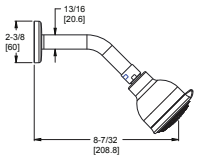

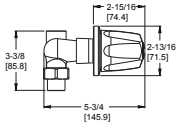

Holes: · 2-Hole 8" Installation

Features:
- Complete Valve and Trim
- 1/2" Union Inlets and 1/2" IP Outlets
- Union Nuts Included
- Three-Function WaterSense™ Showerhead
- Metal Handles, Flanges and Showerhead
- Ceramic Disc Valves
- 1.8 gpm @ 80 psi

Two-Handle Shower	LGØ7-81BC	Polished Chrome	4	$209

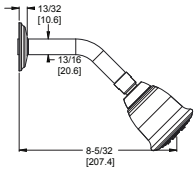

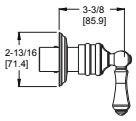

Holes: · 2-Hole 8" Installation

Features:
- Metal Lever Handles
- Must Order Ø7-31XA Valve Separately
- Three-Function WaterSense™ Showerhead
- 1.8 gpm @ 80 psi

Two-Handle Shower	LGØ7-8CBC	Polished Chrome	4	$225

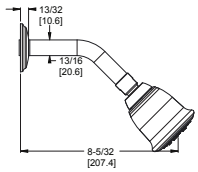

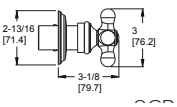

Holes: · 2-Hole 8" Installation

Features:
- Metal Lever Handles
- Must Order Ø7-31XA Valve Separately
- Three-Function WaterSense™ Showerhead
- 1.8 gpm @ 80 psi

CEC Compliant · Cal Green Compliant · Meets EPA WaterSense℠ Standards · NSF Lead-Free Certified · ADA Compliant · UltraSeal™ · SecurePfit™

	Model	Finish	Case Qty	List Price
11-13 Series Shower Valves	Ø11-411Ø	Polished Chrome	4	$113

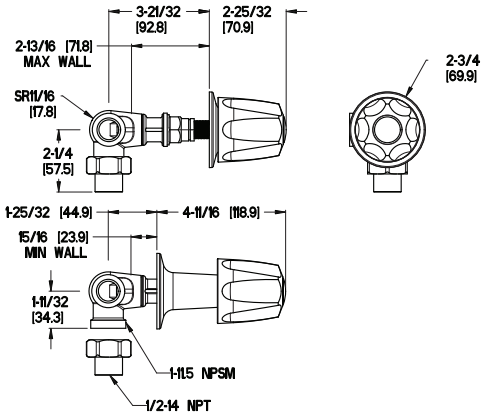

Technical Info

Holes: · 2-Hole Adjustable Installation

Features:
- Complete Loose Body Valve and Trim
- Ceramic Disc Stems
- 1/2" Union Inlet (Corner)
- Hot & Cold
- Metal Verve Handles

CEC Compliant · Cal Green Compliant · Meets EPA WaterSense℠ Standards · NSF Lead-Free Certified · ADA Compliant · UltraSeal™ · SecurePfit™

	Model	Finish	Case Qty	List Price
2- or 3-Handle Rebuild Kit	S1Ø-22ØØ	Polished Chrome	8	$80
	S1Ø-2ØØØ	Polished Chrome	8	$64

Technical Info

Features:
- Acrylic Windsor Handles
- Compression Stems and Seats
- S1Ø-22Ø Kit Includes 3 Handles
- S1Ø-2ØØ Kit Includes 2 Handles

2- or 3-Handle Rebuild Kit	S1Ø-23ØØ	Polished Chrome	8	$77
	S1Ø-21ØØ	Polished Chrome	8	$63

Features:
- Metal Verve Handles
- Compression Stems and Seats
- S1Ø-23Ø Kit Includes 3 Handles
- S1Ø-21Ø Kit Includes 2 Handles

3-Handle Rebuild Kit	S1Ø-33ØØ	Polished Chrome	8	$108

Features:
- Porcelain Cross Handles
- Compression Stems and Seats
- Kit Includes 3 Handles

3-Handle Rebuild Kit	S1Ø-32ØØ	Polished Chrome	8	$104

Features:
- Porcelain Lever Handles
- Compression Stems and Seats
- Kit Includes 3 Handles

2- or 3-Handle Rebuild Kit Avalon Handles	S1Ø-43ØK	Brushed Nickel	3	$165
	S1Ø-43ØY	Tuscan Bronze	3	$209
	S1Ø-4ØØK	Brushed Nickel	3	$128
	S1Ø-4ØØY	Tuscan Bronze	3	$169

Features:
- Avalon Lever Handle
- Compression Stems and Seats
- S1Ø-43ØK & S1Ø-43ØY Kits Include 3 Handles
- S1Ø-4ØØK & S1Ø-4ØØY Kits Include 2 Handles
- Includes Shower Arm & Flange
- Showerhead & Tub Spout Sold Separately

5" Metal Tub Spout	92Ø-Ø22A	Polished Chrome	1	$56
	92Ø-Ø22J	Brushed Nickel	1	$66
	92Ø-Ø22Y	Tuscan Bronze	1	$76

Not-diverting

Diverting	92Ø-411A	Polished Chrome	1	$26
	92Ø-411J	Brushed Nickel	1	$34
	92Ø-411Y	Tuscan Bronze	1	$56

STEP ONE: Remove old trim

STEP TWO: Unscrew valve stems, insert new stems

STEP THREE: Replace with new upgraded trim

CEC Compliant | Cal Green Compliant | Meets EPA WaterSense℠ Standards | NSF Lead-Free Certified | ADA Compliant | UltraSeal™ | SecurePfit™

Showerheads

Your showerhead does more than deliver water. It also delivers a lot of style. Pfister showerheads are thoughtfully designed with the function you want in a range of styles and finishes to complement your bathroom.

Rhen™ Showerhead

SHOWROOM PREFERRED

Model	Finish	Case Qty	List Price
973-264A	Polished Chrome	1	$150.80
973-264J	Brushed Nickel	1	$166.40
973-264B	Matte Black	1	$203.00
973-264BG	Brushed Gold	1	$226.72

Available Winter 2019

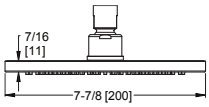

Technical Info

Features:
- Raincan Showerhead
- Easy To Clean Spray Nozzles
- Brass Ball Joint
- Shower Arm and Flange Sold Separately
- Order 941-Ø55Ø for 1.5 gpm Showerhead Insert
- Showerhead 1.8 gpm @ 80 psi

Kenzo™ Raincan Showerhead

SHOWROOM PREFERRED

973-228A	Polished Chrome	1	$91
973-228J	Brushed Nickel	1	$117
973-228D	Polished Nickel	1	$117
973-228B	Matte Black	1	$165
973-228Y	Tuscan Bronze	1	$128
973-228BG	Brushed Gold	1	$140

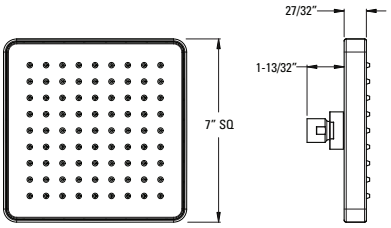

Features:
- Raincan Showerhead
- Easy To Clean Spray Nozzles
- Shower Arm and Flange Sold Separately
- Order 941-Ø55Ø for 1.5 gpm Showerhead Insert
- Showerhead 1.8 gpm @ 80 psi

Marielle™ Raincan Showerhead

SHOWROOM PREFERRED

LG15-M95C	Polished Chrome	6	$131
LG15-M95K	Brushed Nickel	6	$158
LG15-M95Y	Tuscan Bronze	6	$240

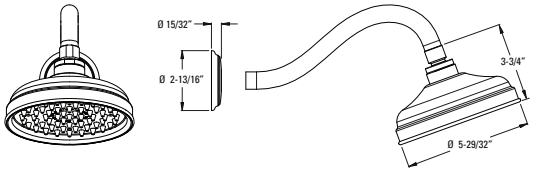

Features:
- Decorative Raincan Showerhead
- Easy To Clean Spray Nozzles
- Includes Shower Arm and Flange
- Order 941-Ø55Ø for 1.5 gpm Showerhead Insert
- Brass Ball Joint
- Showerhead 1.8 gpm @ 80 psi

CEC Compliant | Cal Green Compliant | Meets EPA WaterSense℠ Standards | NSF Lead-Free Certified | ADA Compliant | UltraSeal™ | SecurePfit™

Marielle™ Raincan Showerhead

SHOWROOM PREFERRED

Model	Finish	Case Qty	List Price
LG15-M9ØC	Polished Chrome	12	$99
LG15-M9ØK	Brushed Nickel	12	$119
LG15-M9ØY	Tuscan Bronze	12	$209

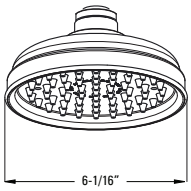

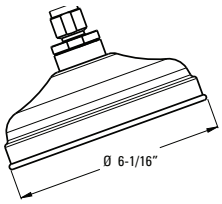

Technical Info

Features:
- Decorative Raincan Showerhead
- Easy To Clean Spray Nozzles
- Order 941-Ø55Ø for 1.5 gpm Showerhead Insert
- Brass Ball Joint
- Showerhead 1.8 gpm @ 80 psi

Arterra™ Showerhead

SHOWROOM PREFERRED

LG15-DE1C	Polished Chrome	3	$101
LG15-DE1K	Brushed Nickel	3	$129
LG15-DE1D	Polished Nickel	3	$129
LG15-DE1Y	Tuscan Bronze	3	$146

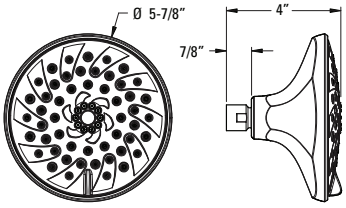

Features:
- Multi-Function Showerhead
- Easy To Clean Spray Nozzles
- Functions:
  - Penetrating Massage
  - Rain Spray, Invigorating Spray
  - Champagne/RainCan Combo Spray
  - Champagne Spray
- Showerhead 1.8 gpm @ 80 psi

Contempra™ Raincan Showerhead

SHOWROOM PREFERRED

973-241A	Polished Chrome	1	$106
973-241J	Brushed Nickel	1	$116
973-241B	Matte Black	1	$158
973-241BG	Brushed Gold	1	$183

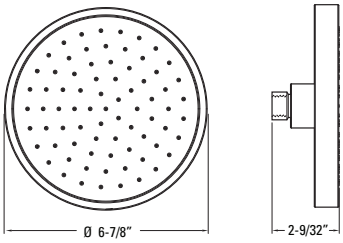

Features:
- Raincan Showerhead
- Easy To Clean Spray Nozzles
- Brass Ball Joint
- Order 941-Ø55Ø for 1.5 gpm Showerhead Insert
- Showerhead 1.8 gpm @ 80 psi

CEC Compliant | Cal Green Compliant | Meets EPA WaterSense℠ Standards | NSF Lead-Free Certified | ADA Compliant | UltraSeal™ | SecurePfit™

Water Saving Showerhead

SHOWROOM PREFERRED

Model	Finish	Case Qty	List Price
Ø15-NC11	Polished Chrome	6	$108
Ø15-NK11	Brushed Nickel	6	$121

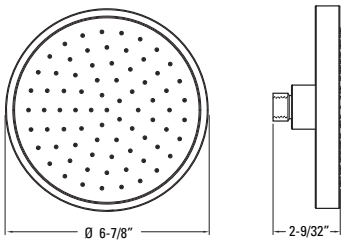

Technical Info

Features:
- Raincan Showerhead
- Easy To Clean Spray Nozzles
- Brass Ball Joint
- Showerhead 1.5 gpm @ 80 psi

Oval Raincan Showerhead

SHOWROOM PREFERRED

973-257A	Polished Chrome	4	$55
973-257J	Brushed Nickel	4	$101
973-257Y	Tuscan Bronze	4	$120

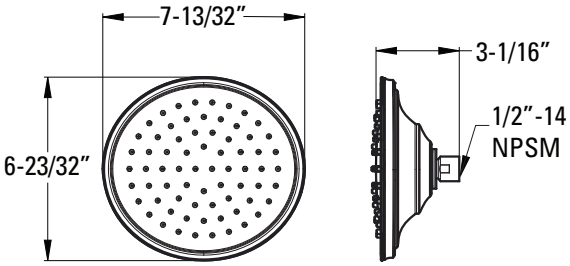

Features:
- Raincan Showerhead
- Easy To Clean Spray Nozzles
- Brass Ball Joint
- Order 941-Ø55Ø for 1.5 gpm Showerhead Insert
- Brass Ball Joint
- Showerhead 1.8 gpm @ 80 psi

CEC Compliant | Cal Green Compliant | Meets EPA WaterSense℠ Standards | NSF Lead-Free Certified | ADA Compliant | UltraSeal™ | SecurePfit™

Water Saving Showerhead

SHOWROOM PREFERRED

Model	Finish	Case Qty	List Price
Ø15-HV1C	Polished Chrome	4	$107
Ø15-HV1K	Brushed Nickel	4	$126
Ø15-HV1Y	Tuscan Bronze	4	$179

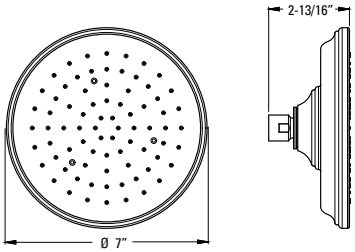

Features:
- Raincan Showerhead
- Easy To Clean Spray Nozzles
- Brass Ball Joint
- Showerhead 1.5 gpm @ 80 psi

Deckard™ Showerhead

Model	Finish	Case Qty	List Price
973-255A	Polished Chrome	1	$35
973-255J	Brushed Nickel	1	$47
973-255B	Matte Black	1	$63

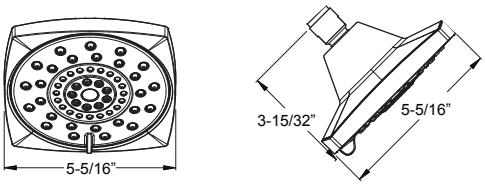

Features:
- Three-Function Showerhead
- 3 Functions:
  - Penetrating Massage
  - Rain Spray
  - Invigorating Spray
- Easy To Clean Spray Nozzles
- Order 941-Ø55 for 1.5 gpm Showerhead Insert
- Showerhead 1.8 gpm @ 80 psi

Northcott™ Showerhead

Model	Finish	Case Qty	List Price
973-169A	Polished Chrome	1	$48
973-169J	Brushed Nickel	1	$66
973-169Y	Tuscan Bronze	1	$80

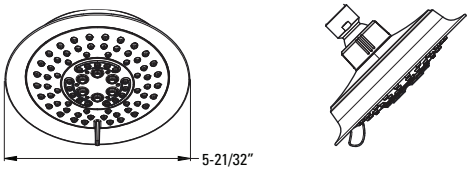

Features:
- Five-Function Sprayhead
- 5 Functions:
  - Penetrating Massage
  - Rain Spray
  - Invigorating Spray
  - Champagne/Raincan Combo
  - Campange Spray)
- Easy To Clean Spray Nozzles
- IP And Quick Connect Diverted Tub Spout
- Order 941-Ø55Ø for 1.5 gpm Showerhead Insert
- Showerhead 1.8 gpm @ 80 psi

CEC Compliant | Cal Green Compliant | Meets EPA WaterSense℠ Standards | NSF Lead-Free Certified | ADA Compliant | UltraSeal™ | SecurePfit™

Bronson™ Showerhead

Model	Finish	Case Qty	List Price
973-183A	Polished Chrome	1	$62
973-183J	Brushed Nickel	1	$86
973-183Y	Tuscan Bronze	1	$116

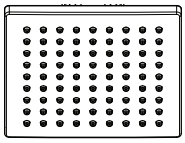

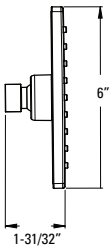

Technical Info

Features:
- Decorative Showerhead
- Easy To Clean Spray Nozzles
- Brass Ball Joint
- Showerhead 1.8 gpm @ 80 psi

Saxton™ Showerhead

973-218A	Polished Chrome	1	$45.60
973-218J	Brushed Nickel	1	$55.20
973-218Y	Tuscan Bronze	1	$60.40

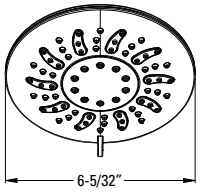

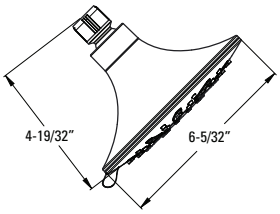

Features:
- Three-Function Showerhead
- 3 Functions:
  - -Full Spray
  - -Penetrating Massage
  - -Full Spray/Masage Combo Spray
- Easy To Clean Spray Nozzles
- Order 941-Ø55Ø for 1.5 gpm Showerhead Insert
- Showerhead 1.8 gpm @ 80 psi

Avalon™ Showerhead

973-169A	Polished Chrome	1	$48
973-169J	Brushed Nickel	1	$66
973-169Y	Tuscan Bronze	1	$80

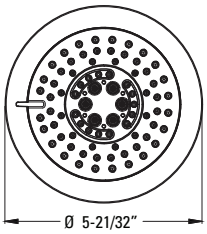

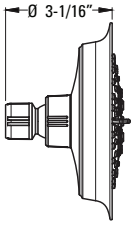

Features:
- Five-Function Showerhead
- 5 Functions:
  - – Penetrating Massage
  - – Rain Spray
  - – Invigorating Spray
  - – Champagne/Raincan Combo Spray
  - – Champagne Spray
- Order 941-Ø55Ø for 1.5 gpm Showerhead Insert
- Brass Ball Joint
- Showerhead 1.8 gpm @ 80 psi

CEC Compliant | Cal Green Compliant | Meets EPA WaterSense℠ Standards | NSF Lead-Free Certified | ADA Compliant | UltraSeal™ | SecurePfit™

	Model	Finish	Case Qty	List Price
Arkitek™ Showerhead	973-227A	Polished Chrome	1	$32
	973-227J	Brushed Nickel	1	$47

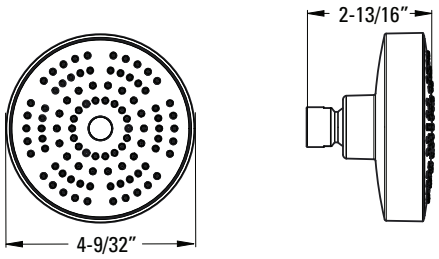

Technical Info

Features:
- Decorative Showerhead
- Easy To Clean Spray Nozzles
- Brass Ball Joint
- Showerhead 1.8 gpm @ 80 psi

Bell Showerhead	LG15-Ø6ØØ	Polished Chrome	4	$60
	LG15-Ø6ØK	Brushed Nickel	4	$72

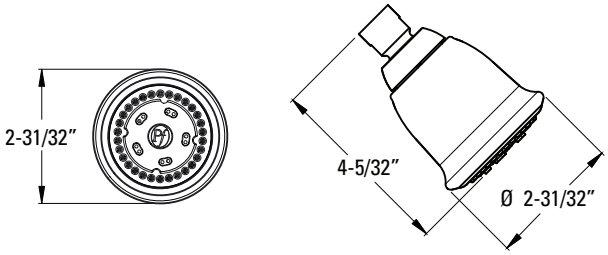

Features:
- Bell Showerhead
- Order 941-Ø55Ø for 1.5 gpm Showerhead Insert
- Brass Ball Joint
- Showerhead 1.8 gpm @ 80 psi

Water Saving Showerhead	Ø15-PCØ1	Polished Chrome	6	$47
	Ø15-PKØ1	Brushed Nickel	6	$66

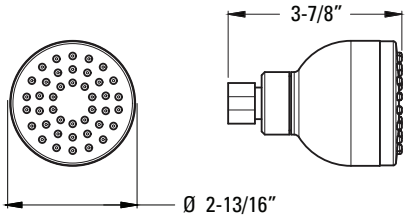

Features:
- Bell Showerhead
- Easy To Clean Spray Nozzles
- Brass Ball Joint
- Showerhead 1.5 gpm @ 80 psi

CEC Compliant | Cal Green Compliant | Meets EPA WaterSense℠ Standards | NSF Lead-Free Certified | ADA Compliant | UltraSeal™ | SecurePfit™

	Model	Finish	Case Qty	List Price
Water Saving Showerhead	Ø15-LCØC	Polished Chrome	24	$27

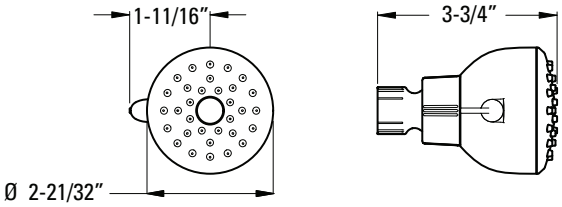

Technical Info

Features:
- Bell Showerhead
- Easy To Clean Spray Nozzles
- Variable Air Infused Technology
- Showerhead 1.5 gpm @ 80 psi

Handheld

Rhen™
Slide Bar/Hand Shower Kit

SHOWROOM PREFERRED

LG16-3RHC	Polished Chrome	3	$378
LG16-3RHK	Brushed Nickel	3	$500
LG16-3RHB	Matte Black	3	$583
LG16-3RHBG	Brushed Gold	3	$609

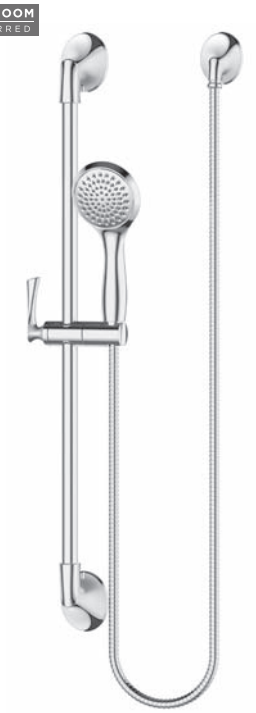

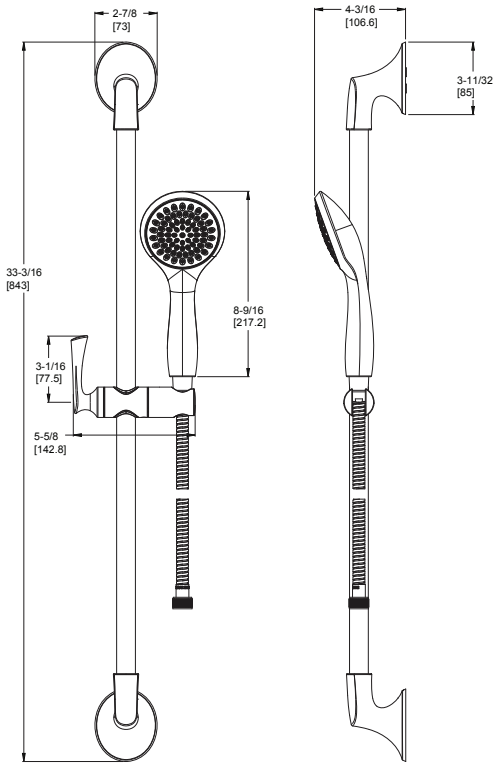

Features:
- Complete Slide Bar Package With Hand Shower, Hose, Drop Elbow, and Slide Bar
- Self Cleaning Hand Held Showerhead
- 60" Metal Hose with Matching Finish
- Back Flow Prevention
- Works with Rhen Diverter Trim and Valve
- Not to be Used as a Grab Bar
- Hand Shower 1.8 gpm @ 60 psi

CEC Compliant | Cal Green Compliant | Meets EPA WaterSense℠ Standards | NSF Lead-Free Certified | ADA Compliant | UltraSeal™ | SecurePfit™

Kenzo™
Slide Bar/Hand Shower Kit

SHOWROOM PREFERRED

Model	Finish	Case Qty	List Price
LG16-3DFC	Polished Chrome	3	$384
LG16-3DFK	Brushed Nickel	3	$511
LG16-3DFB	Matte Black	3	$595

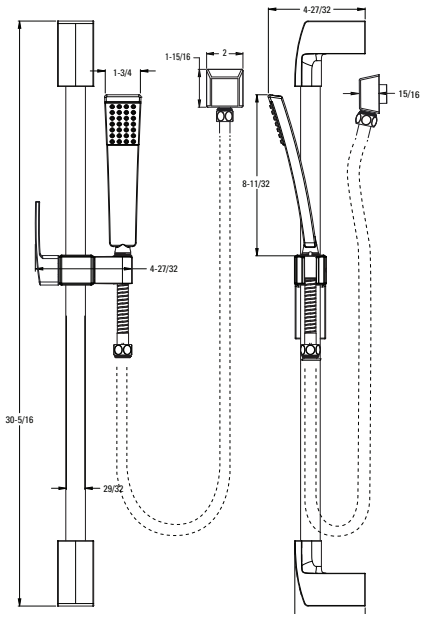

Technical Info

Features:
- Complete Slide Bar Package with Hand Shower, Hose, Drop Elbow, and Slide Bar
- Wall Mount Bracket and Drop Elbow
- Easy To Clean Spray Nozzles
- 60" Metal Hose with Matching Finish
- Back Flow Prevention
- Works with Kenzo Diverter Trim and Valve
- Not to be Used as a Grab Bar
- Hand Shower 1.8 gpm @ 80 psi

Arterra™
Slide Bar/Hand Shower Kit

SHOWROOM PREFERRED

LG16-3DEC	Polished Chrome	3	$356
LG16-3DEK	Brushed Nickel	3	$475
LG16-3DED	Polished Nickel	3	$475
LG16-3DEY	Tuscan Bronze	3	$560

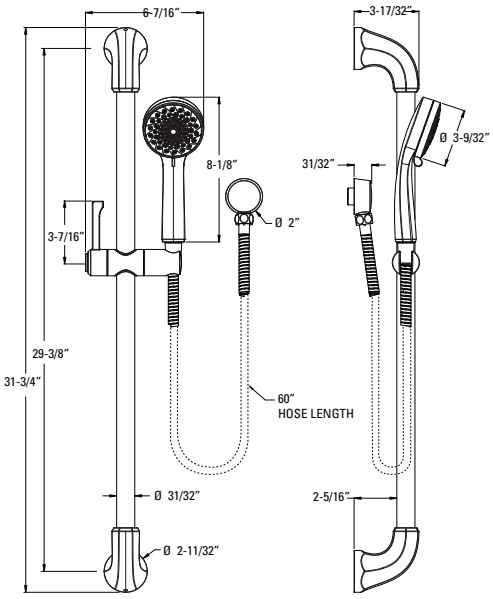

Features:
- Complete Slide Bar Package with Hand Shower, Hose, Drop Elbow, and Slide Bar
- 3 Function Hand Shower
- Functions:
  - Penetrating Massage
  - Rain Spray
  - Invigorating Spray
- Easy To Clean Spray Nozzles
- 60" Metal Hose with Matching Finish
- All Metal Slide Bar
- Metal Hose with Matching Finish
- Back Flow Prevention
- Works with Arterra Diverter Trim and Valve
- Not to be Used as a Grab Bar
- Hand Shower 1.8 gpm @ 80 psi

CEC Compliant | Cal Green Compliant | Meets EPA WaterSense℠ Standards | NSF Lead-Free Certified | ADA Compliant | UltraSeal™ | SecurePfit™

Slide Bar Package

SHOWROOM PREFERRED

Model	Finish	Case Qty	List Price
LG16-3ØØC	Polished Chrome	6	$240
LG16-3ØØK	Brushed Nickel	6	$407
LG16-3ØØB	Matte Black	6	$496
LG16-3ØØY	Tuscan Bronze	6	$516
LG16-3ØØU	Rustic Bronze	6	$600
LG16-3ØØBG	Brushed Gold	6	$551

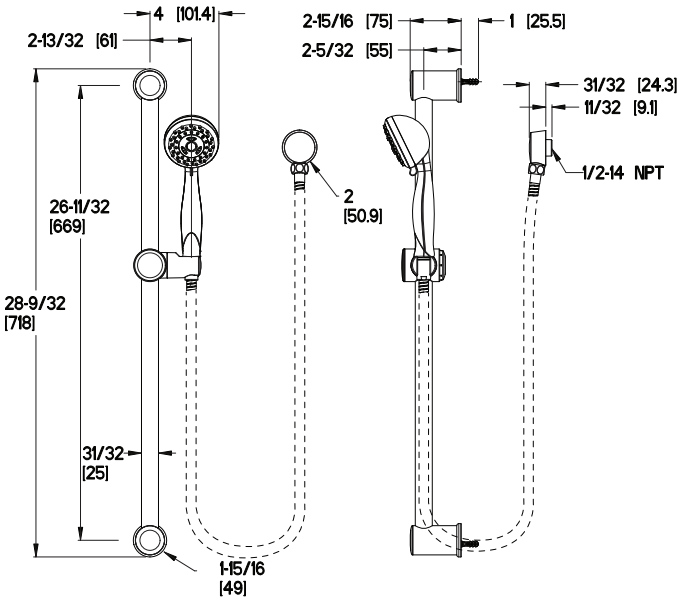

Technical Info

Features:
- Complete Slide Bar Package with Hand Shower, Hose, Drop Elbow, and Slide Bar
- Metal Slide Bar
- Matching Finish Metal Hose
- Easy To Clean Spray Nozzles
- 60" Metal Hose with Matching Finish
- Functions: Penetrating Massage, Rain Spray and Invigorating Spray
- Push Mechanism for Height Adjustment
- Not to be Used as a Grab Bar
- Hand Shower 1.8 gpm @ 80 psi

Kenzo™ Hand Shower Kit

SHOWROOM PREFERRED

LG16-1DFC	Polished Chrome	3	$217
LG16-1DFK	Brushed Nickel	3	$346
LG16-1DFB	Matte Black	3	$354

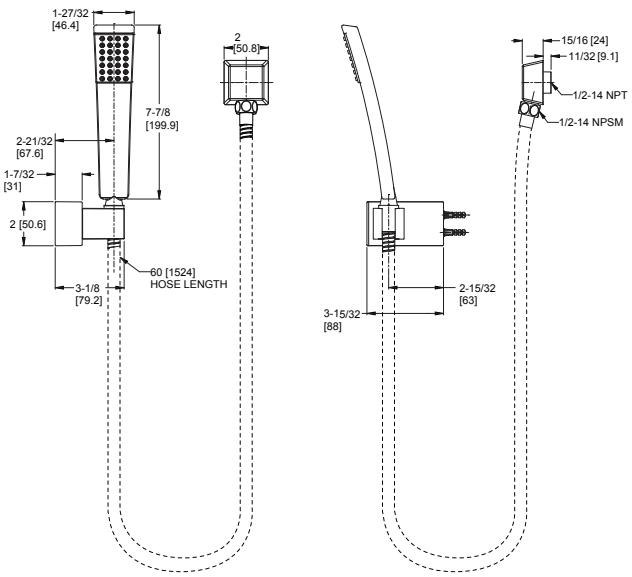

Technical Info

Features:
- Hand Shower, Wall Mount Bracket and Drop Elbow
- Easy To Clean Spray Nozzles
- 60" Metal Hose with Matching Finish
- Metal Hose with Matching Finish
- Back Flow Prevention
- Hand Shower 1.8 gpm @ 80 psi

CEC Compliant | Cal Green Compliant | Meets EPA WaterSense℠ Standards | NSF Lead-Free Certified | ADA Compliant | UltraSeal™ | SecurePfit™

Wall Mount Package

SHOWROOM PREFERRED

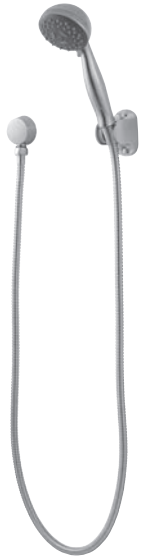

Model	Finish	Case Qty	List Price
LG16-2ØØC	Polished Chrome	3	$168
LG16-2ØØK	Brushed Nickel	3	$300
LG16-2ØØY	Tuscan Bronze	3	$349
LG16-2ØØU	Rustic Bronze	3	$444

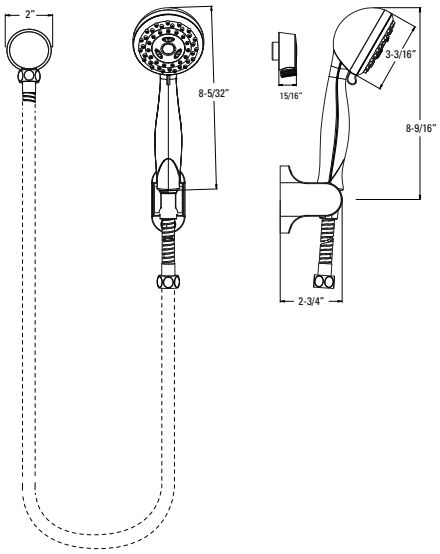

Technical Info

Features:
- Three-Function Hand Shower with Dual Check Valves
- Functions:
  - Penetrating Massage
  - Rain Spray
  - Invigorating Spray
- Matching Finish Metal Hose
- Easy To Clean Spray Nozzles
- 60" Metal Hose with Matching Finish
- Hand Shower, Hose, Wall Mount Bracket, and Drop Elbow
- Order 941-Ø55Ø for 1.5 gpm Separately
- Hand Shower 1.8 gpm @ 80 psi

Showers

Hand Shower Package

SHOWROOM PREFERRED

LG16-4ØØC	Polished Chrome	4	$121
LG16-4ØØK	Brushed Nickel	4	$181
LG16-4ØØY	Tuscan Bronze	4	$300

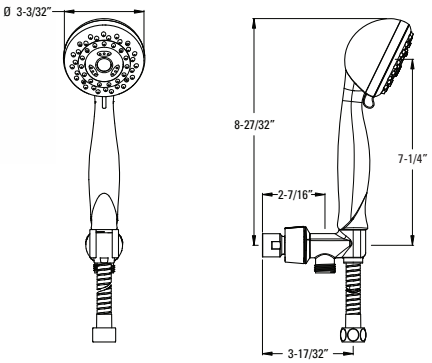

Features:
- Three-Function Hand Shower
- Functions:
  - Penetrating Massage
  - Rain Spray
  - Invigorating Spray
- Easy To Clean Spray Nozzles
- Metal Hose and Shower Arm Mount
- Dual Check Valve for Back Flow Prevention
- Hand Shower 1.8 gpm @ 80 psi

CEC Compliant | Cal Green Compliant | Meets EPA WaterSense℠ Standards | NSF Lead-Free Certified | ADA Compliant | UltraSeal™ | SecurePfit™

Universal Hand Shower

SHOWROOM PREFERRED

Model	Finish	Case Qty	List Price
LG16-19ØC	Polished Chrome	6	$60
LG16-19ØK	Brushed Nickel	6	$81
LG16-19ØB	Matte Black	6	$112
LG16-19ØY	Tuscan Bronze	6	$106
LG16-19ØU	Rustic Bronze	6	$117
LG16-19ØBG	Brushed Gold	6	$120

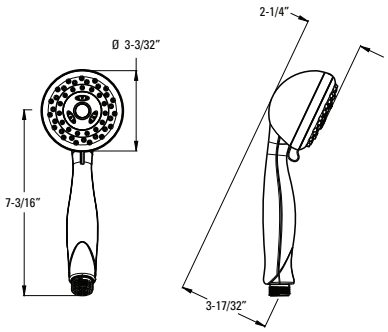

Technical Info

Features:
- Three-Function Hand Shower
- Functions:
  - Penetrating Massage
  - Rain Spray
  - Invigorating Spray
- Easy To Clean Spray Nozzles
- Dual Check Valve for Back Flow Prevention
- Order 941-Ø55Ø 1.5 gpm Separately
- Hand Shower 1.8 gpm @ 80 psi

Avalon™ Hand Shower Package

SHOWROOM PREFERRED

LG16-CBØC	Polished Chrome	4	$99
LG16-CBØK	Brushed Nickel	4	$136
LG16-CBØY	Tuscan Bronze	4	$161

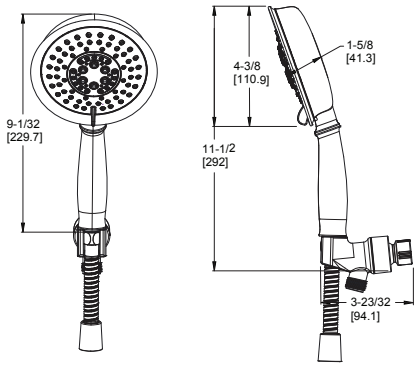

Features:
- Three-Function Hand Shower with Dual Check Valves
- Functions:
  - Penetrating Massage
  - Rain Spray
  - Invigorating Spray
- Easy To Clean Spray Nozzles
- 60" Metal Hose with Matching Finish
- Mylar Hose and Shower Arm Mount
- Order 941-Ø55Ø 1.5 gpm Separately
- Hand Shower 1.8 gpm @ 80 psi

CEC Compliant | Cal Green Compliant | Meets EPA WaterSense℠ Standards | NSF Lead-Free Certified | ADA Compliant | UltraSeal™ | SecurePfit™

ADA HandShower

SHOWROOM PREFERRED

Model	Finish	Case Qty	List Price
LG16-51ØC	Chrome	6	$72
LG16-51ØK	Brushed Nickel	6	$92

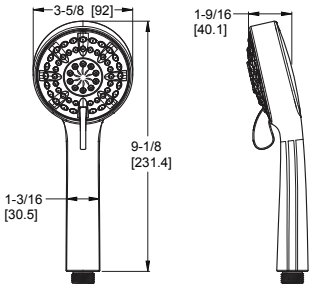

Technical Info

Features:
- 1.8 GPM Flow Rate
- 60" Metal Hose (Excludes DG Finish)
- 60" PVC Hose (DG Finish Only)
- Easy to Clean Nozzles
- 4 Function Handheld:
  - Full Spray
  - Full Spray/Massage Combo
  - Massage
  - Pause
- 3 Piece Job Pack
- Pforever Warranty®

CEC Compliant | Cal Green Compliant | Meets EPA WaterSense℠ Standards | NSF Lead-Free Certified | ADA Compliant | UltraSeal™ | SecurePfit™

6" Ceiling Shower Arm

SHOWROOM PREFERRED

Ø15-Ø6CC	Polished Chrome	3	$55
Ø15-Ø6CK	Brushed Nickel	3	$81
Ø15-Ø6CB	Matte Black	3	$120
Ø15-Ø6CU	Rustic Bronze	3	$113
Ø15-Ø6CBG	Brushed Gold	3	$126

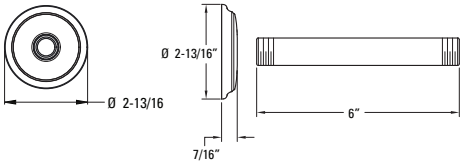

Features:
- Ceiling Mount Shower Arm and Flange
- Matching Finish
- Brass Shower Arm
- 1/2" NPT Male Connections

$142

12" Ceiling Shower Arm

SHOWROOM PREFERRED

Ø15-12CC	Polished Chrome	3	$67
Ø15-12CK	Brushed Nickel	3	$93
Ø15-12CB	Matte Black	3	$132
Ø15-12CY	Tuscan Bronze	3	$120
Ø15-12CU	Rustic Bronze	3	$125
Ø15-12CBG	Brushed Gold	3	$140

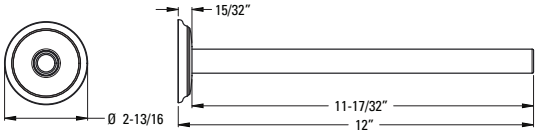

Features:
- Ceiling Mount Shower Arm and Flange
- Matching Finish
- Brass Shower Arm
- 1/2" NPT Male Connections

Ashfield™ Arcing Shower Arm

973-5Ø5A	Polished Chrome	1	$148
973-5Ø5J	Brushed Nickel	1	$166
973-5Ø5Y	Tuscan Bronze	1	$142
973-5Ø5U	Rustic Bronze	1	$196

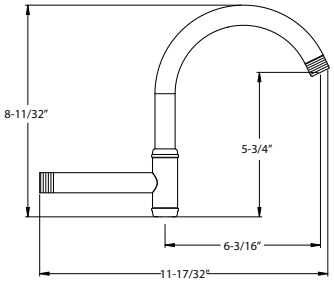

Features:
- Brass Shower Arm
- 1/2" NPT Male Connections

Marielle™ Standard Shower Arm

973-ØØ9A	Polished Chrome	1	$36
973-ØØ9J	Brushed Nickel	1	$48
973-ØØ9D	Polished Nickel	1	$48
973-ØØ9Y	Tuscan Bronze	1	$51

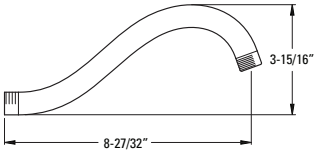

Features:
- Brass Shower Arm
- 1/2" NPT Male Connections

Marielle™ Extended Length Shower Arm

Model	Finish	Case Qty	List Price
973-Ø19A	Polished Chrome	1	$53
973-Ø19J	Brushed Nickel	1	$53
973-Ø19Y	Tuscan Bronze	1	$72

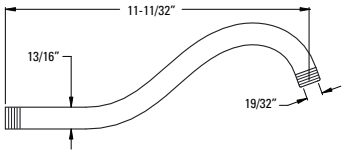

Technical Info

Features:
- 11 11/32' Length
- Brass Shower Arm
- 1/2" NPT Male Connections

S-Curve Shower Arm

Model	Finish	Case Qty	List Price
973-Ø33A	Polished Chrome	1	$95
973-Ø33J	Brushed Nickel	1	$105
973-Ø33Y	Tuscan Bronze	1	$121

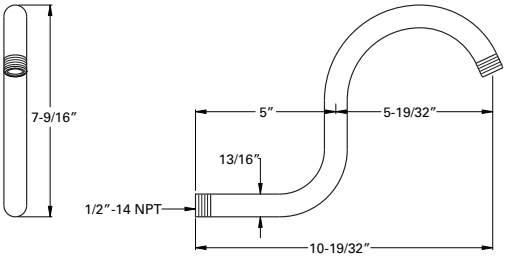

Features:
- Brass Shower Arm
- 1/2" NPT Male Connections

Straight Shower Arm

Model	Finish	Case Qty	List Price
973-1Ø3A	Polished Chrome	1	$77
973-1Ø3J	Brushed Nickel	1	$93
973-1Ø3D	Polished Nickel	1	$100
973-1Ø3B	Matte Black	1	$121
973-1Ø3Y	Tuscan Bronze	1	$116
973-1Ø3BG	Brushed Gold	1	$133

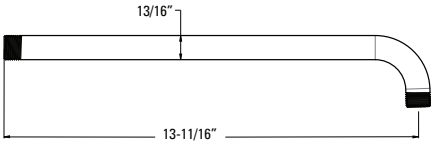

Features:
- 13 11/16" Length
- Brass Shower Arm
- 1/2" NPT Male Connections

Curved Shower Arm

Model	Finish	Case Qty	List Price
973-Ø3ØA	Polished Chrome	1	$17
973-Ø3ØJ	Brushed Nickel	1	$18
973-Ø3ØD	Polished Nickel	1	$31
973-Ø3ØB	Matte Black	1	$18
973-Ø3ØY	Tuscan Bronze	1	$36
973-Ø3ØU	Rustic Bronze	1	$34
973-Ø3ØBG	Brushed Gold	1	$28

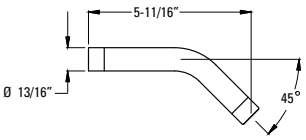

Features:
- 5 11/16' Length
- Brass Shower Arm
- 1/2" NPT Male Connections

	Model	Finish	Case Qty	List Price
Rhen™ Shower Arm Flange	96Ø-343A	Polished Chrome	1	$17.00
	96Ø-343J	Brushed Nickel	1	$19.76
	96Ø-343B	Matte Black	1	$19.00
	96Ø-343BG	Brushed Gold	1	$24.00

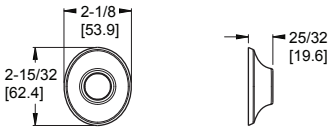

Features:
- All Metal
- Matches Kenzo Style & Finishes

Kenzo™ Shower Arm Flange	96Ø-Ø97A	Polished Chrome	1	$17
	96Ø-Ø97J	Brushed Nickel	1	$21
	96Ø-Ø97B	Matte Black	1	$19

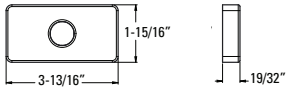

Features:
- All Metal
- Matches Kenzo Style & Finishes

Ashfield™ Shower Arm Flange	94Ø-525A	Polished Chrome	1	$13
	94Ø-525J	Brushed Nickel	1	$16
	94Ø-525Y	Tuscan Bronze	1	$20
	94Ø-525U	Rustic Bronze	1	$19

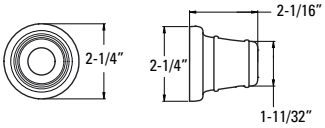

Features:
- All Metal
- Matches Ashfield Style & Finishes

Arterra™ Shower Arm Flange	96Ø-274A	Polished Chrome	1	$13
	96Ø-274J	Brushed Nickel	1	$16
	96Ø-274D	Polished Nickel	1	$16
	96Ø-274Y	Tuscan Bronze	1	$18

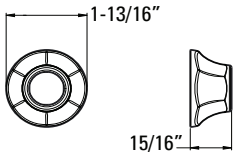

Features:
- All Metal
- Matches Arterra Style & Finishes

Marielle® & Avalon™ Shower Arm Flange	96Ø-Ø39A	Polished Chrome	1	$9
	96Ø-Ø39J	Brushed Nickel	1	$11
	96Ø-Ø39D	Polished Nickel	1	$11
	96Ø-Ø39Y	Tuscan Bronze	1	$10

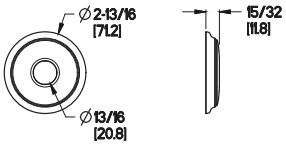

Features:
- All Metal
- Matches Marielle and Avalon Style & Finishes

	Model	Finish	Case Qty	List Price
Contempra® Shower Arm Flange	96Ø-258A	Polished Chrome	1	$10
	96Ø-258J	Brushed Nickel	1	$14
	96Ø-258B	Matte Black	1	$17
	96Ø-258BG	Brushed Gold	1	$19

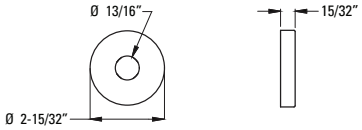

Technical Info

Features:
- All Metal
- Matches Contempra Style & Finishes

Deckard™ Shower Arm Flange	96Ø-331A	Polished Chrome	1	$7
	96Ø-331J	Brushed Nickel	1	$8
	96Ø-331B	Matte Black	1	$9

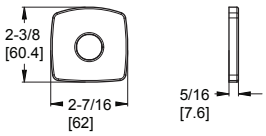

Features:
- All Metal
- Matches Deckard Style & Finishes

Arkitek™ Shower Arm Flange	96Ø-282A	Polished Chrome	1	$13
	96Ø-282J	Brushed Nickel	1	$18

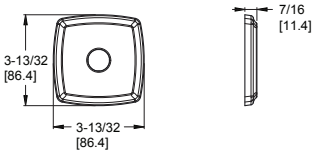

Features:
- All Metal
- Matches Arkitek Style & Finishes

Pfirst Modern™ Shower Arm Flange	96Ø-323A	Polished Chrome	1	$4
	96Ø-323J	Brushed Nickel	1	$6

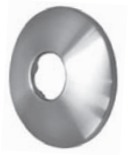

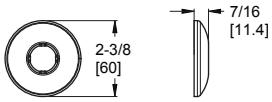

Features:
- All Metal
- Matches Pfirst Modern Style & Finishes

Standard Shower Arm Flange	96Ø-Ø63A	Polished Chrome	1	$4
	96Ø-Ø63J	Brushed Nickel	1	$7
	96Ø-Ø63Y	Tuscan Bronze	1	$10

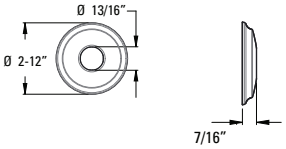

Features:
- All Metal

Metal Hose

SHOWROOM PREFERRED

Model	Finish	Case Qty	List Price
951-335A	Polished Chrome	6	$47
951-335J	Brushed Nickel	6	$110
951-335D	Polished Nickel	6	$110
951-335B	Matte Black	6	$159
951-335Y	Tuscan Bronze	6	$148
951-335BG	Brushed Gold	6	$193

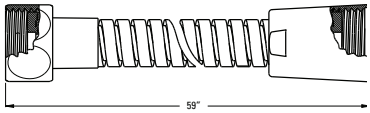

Technical Info

Features:
- Anti-Twist Metal Hose
- Matching Finish Metal Hose

Rhen™ Oval Drop Elbow

SHOWROOM PREFERRED

Model	Finish	Case Qty	List Price
96Ø-344A	Polished Chrome	1	$38
96Ø-344J	Brushed Nickel	1	$52
96Ø-344B	Matte Black	1	$82
96Ø-344BG	Brushed Gold	1	$68

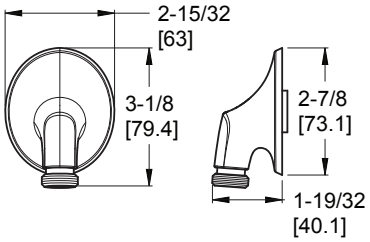

Features:
- 1/2" IP Connection
- Matching Finish

Circle Drop Elbow

SHOWROOM PREFERRED

Model	Finish	Case Qty	List Price
973-272A	Polished Chrome	8	$40
973-272J	Brushed Nickel	8	$61
973-272D	Polished Nickel	8	$59
973-272B	Matte Black	8	$85
973-272Y	Tuscan Bronze	8	$77
973-272BG	Brushed Gold	8	$94

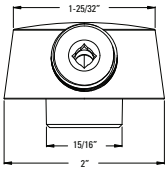

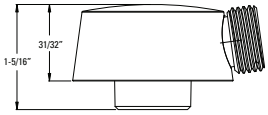

Features:
- 1/2" IP Connection

Square Drop Elbow

SHOWROOM PREFERRED

Model	Finish	Case Qty	List Price
973-279A	Polished Chrome	8	$40
973-279J	Brushed Nickel	8	$61
973-279D	Polished Nickel	8	$59
973-279B	Matte Black	8	$85
973-279Y	Tuscan Bronze	8	$77
973-279BG	Brushed Gold	8	$71

Technical Info

Features:
- 1/2" IP Connection
- Matching Finish

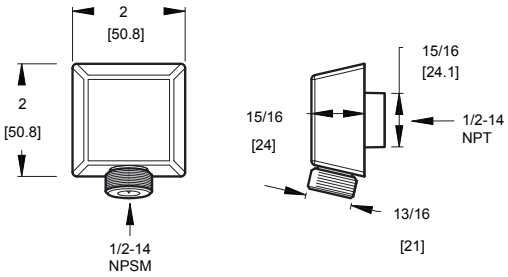

Wall Mount

Model	Finish	Case Qty	List Price
971-199A	Polished Chrome	8	$41
971-199J	Brushed Nickel	8	$66
971-199B	Matte Black	8	$95
971-199Y	Tuscan Bronze	8	$87
971-199BG	Brushed Gold	8	$100

Features:
- Adjustable Wall Mount
- Matching Finish

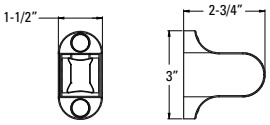

Rhen™ Diverter Trim

SHOWROOM PREFERRED

Model	Finish	Case Qty	List Price
Ø16-RH1C	Polished Chrome	3	$123
Ø16-RH1K	Brushed Nickel	3	$169
Ø16-RH1B	Matte Black	3	$189
Ø16-RH1BG	Brushed Gold	3	$204

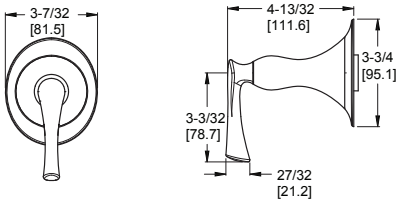

Technical Info

Features:
- SecurePfit™
- Metal Lever Handle and Matching Flange
- Can Be Used with Ø15-2WDX for Cal Green Compliant Applications

Must Order Ø15-4WDX or Ø15-2WDX Rough In Valve Separately. See Valve Section.

Kenzo™ Diverter Trim

SHOWROOM PREFERRED

Model	Finish	Case Qty	List Price
Ø16-DFØC	Polished Chrome	3	$121
Ø16-DFØK	Brushed Nickel	3	$167
Ø16-DFØB	Matte Black	3	$170

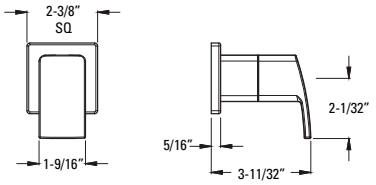

Technical Info

Features:
- SecurePfit™
- Metal Lever Handle and Matching Flange
- Can Be Used with Ø15-2WDX for Cal Green Compliant Applications

Must Order Ø15-4WDX or Ø15-2WDX Rough In Valve Separately. See Valve Section.

Ashfield™ Diverter Trim

SHOWROOM PREFERRED

Model	Finish	Case Qty	List Price
Ø16-YPØC	Polished Chrome	3	$104
Ø16-YPØK	Brushed Nickel	3	$149
Ø16-YPØY	Tuscan Bronze	3	$219
Ø16-YPØU	Rustic Bronze	3	$228

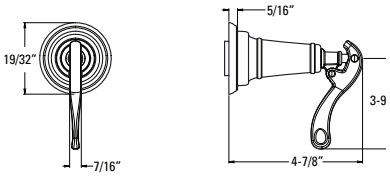

Technical Info

Features:
- SecurePfit™
- Metal Lever Handle and Matching Flange
- Can Be Used with Ø15-2WDX for Cal Green Compliant Applications

Must Order Ø15-4WDX or Ø15-2WDX Rough In Valve Separately. See Valve Section.

Arterra™ Diverter Trim

SHOWROOM PREFERRED

Model	Finish	Case Qty	List Price
Ø16-DE1C	Polished Chrome	3	$126
Ø16-DE1K	Brushed Nickel	3	$148
Ø16-DE1D	Polished Nickel	3	$148
Ø16-DE1Y	Tuscan Bronze	3	$171

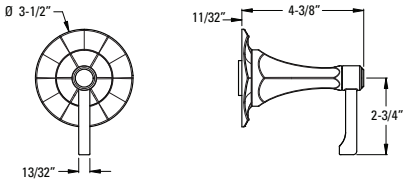

Technical Info

Features:
- SecurePfit™
- Metal Lever Handle and Matching Flange
- Can Be Used with Ø15-2WDX for Cal Green Compliant Applications

Must Order Ø15-4WDX or Ø15-2WDX Rough In Valve Separately. See Valve Section.

CEC Compliant · Cal Green Compliant · Meets EPA WaterSense℠ Standards · NSF Lead-Free Certified · ADA Compliant · UltraSeal™ · SecurePfit™

Marielle® Diverter Trim

SHOWROOM PREFERRED

Model	Finish	Case Qty	List Price
Ø16-MBØC	Polished Chrome	3	$103
Ø16-MBØK	Brushed Nickel	3	$144
Ø16-MBØY	Tuscan Bronze	3	$212

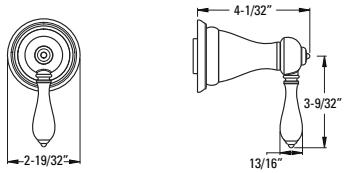

Technical Info

Features:
- SecurePfit™
- Metal Lever Handle and Matching Flange
- Can Be Used with Ø15-2WDX for Cal Green Compliant Applications

Must Order Ø15-4WDX or Ø15-2WDX Rough In Valve Separately. See Valve Section.

Contempra® Diverter Trim

SHOWROOM PREFERRED

Model	Finish	Case Qty	List Price
Ø16-NC1C	Polished Chrome	3	$95
Ø16-NC1K	Brushed Nickel	3	$126
Ø16-NC1B	Matte Black	3	$143
Ø16-NC1BG	Brushed Gold	3	$171

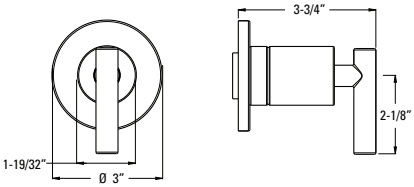

Features:
- SecurePfit™
- Metal Lever Handle and Matching Flange
- Can Be Used with Ø15-2WDX for Cal Green Compliant Applications

Must Order Ø15-4WDX or Ø15-2WDX Rough In Valve Separately. See Valve Section.

Deckard™ Diverter Trim

Model	Finish	Case Qty	List Price
Ø16-DAØC	Polished Chrome	3	$86
Ø16-DAØK	Brushed Nickel	3	$103
Ø16-DAØB	Matte Black	3	$146

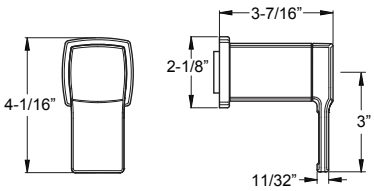

Features:
- SecurePfit™
- Metal Lever Handle and Matching Flange
- Can Be Used with Ø15-2WDX for Cal Green Compliant Applications

Must Order Ø15-4WDX or Ø15-2WDX Rough In Valve Separately. See Valve Section.

Northcott™ Diverter Trim

Model	Finish	Case Qty	List Price
Ø16-MGØC	Polished Chrome	3	$86
Ø16-MGØK	Brushed Nickel	3	$103
Ø16-MGØY	Tuscan Bronze	3	$146

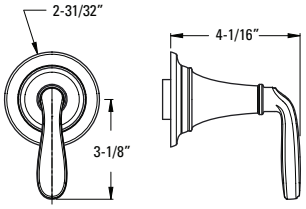

Features:
- SecurePfit™
- Metal Lever Handle and Matching Flange
- Can Be Used with Ø15-2WDX for Cal Green Compliant Applications

Must Order Ø15-4WDX or Ø15-2WDX Rough In Valve Separately. See Valve Section.

CEC Compliant | Cal Green Compliant | Meets EPA WaterSense℠ Standards | NSF Lead-Free Certified | ADA Compliant | UltraSeal™ | SecurePfit™

Bronson™ Diverter Trim

Model	Finish	Case Qty	List Price
Ø16-BSØC	Polished Chrome	3	$86
Ø16-BSØK	Brushed Nickel	3	$103
Ø16-BSØY	Tuscan Bronze	3	$146

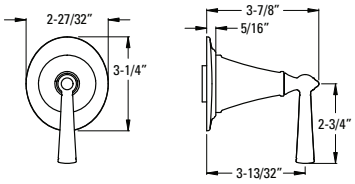

Technical Info

Features:
- SecurePfit™
- Metal Lever Handle and Matching Flange
- Can Be Used with Ø15-2WDX for Cal Green Compliant Applications

Must Order Ø15-4WDX or Ø15-2WDX Rough In Valve Separately. See Valve Section.

Saxton™ Diverter Trim

Ø16-GL1C	Polished Chrome	3	$66
Ø16-GL1K	Brushed Nickel	3	$91
Ø16-GL1Y	Tuscan Bronze	3	$122

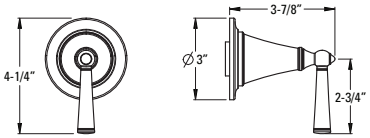

Features:
- SecurePfit™
- Metal Lever Handle and Matching Flange
- Can Be Used with Ø15-2WDX for Cal Green Compliant Applications

Must Order Ø15-4WDX or Ø15-2WDX Rough In Valve Separately. See Valve Section.

Avalon™ Diverter Trim

Ø16-CB1C	Polished Chrome	3	$73
Ø16-CB1K	Brushed Nickel	3	$103
Ø16-CB1Y	Tuscan Bronze	3	$135

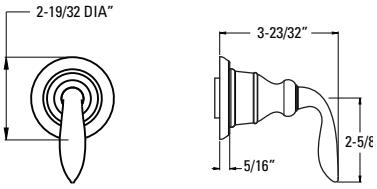

Features:
- SecurePfit™
- Metal Lever Handle and Matching Flange
- Can Be Used with Ø15-2WDX for Cal Green Compliant Applications

Must Order Ø15-4WDX or Ø15-2WDX Rough In Valve Separately. See Valve Section.

CEC Compliant | Cal Green Compliant | Meets EPA WaterSense℠ Standards | NSF Lead-Free Certified | ADA Compliant | UltraSeal™ | SecurePfit™

Rhen™ Tub Spout

Model	Finish	Case Qty	List Price
92Ø-2Ø9A	Polished Chrome	1	$91
92Ø-2Ø9J	Brushed Nickel	1	$98
92Ø-2Ø9B	Matte Black	1	$108
92Ø-2Ø9BG	Brushed Gold	1	$130

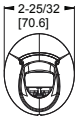

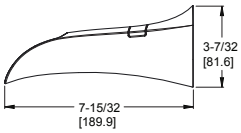

Technical Info

Features:
- All Metal
- Integrated Diverted Spout
- 1/2" IP Connection Only

Kenzo™ Tub Spout

Model	Finish	Case Qty	List Price
92Ø-623A	Polished Chrome	1	$94
92Ø-623J	Brushed Nickel	1	$107
92Ø-623B	Matte Black	1	$113

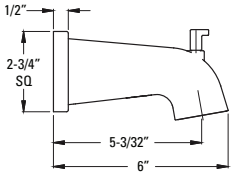

Technical Info

Features:
- All Metal
- IP & Quick Connect Diverted Spout

Ashfield™ Tub Spout

Model	Finish	Case Qty	List Price
92Ø-233A	Polished Chrome	1	$65
92Ø-233J	Brushed Nickel	1	$82
92Ø-233Y	Tuscan Bronze	1	$87
92Ø-233U	Rustic Bronze	1	$83

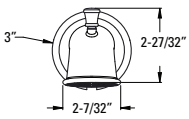

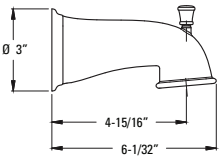

Technical Info

Features:
- All Metal
- IP & Quick Connect Diverted Spout

Arterra™ Tub Spout

Model	Finish	Case Qty	List Price
92Ø-146A	Polished Chrome	1	$137
92Ø-146J	Brushed Nickel	1	$157
92Ø-146D	Polished Nickel	1	$157
92Ø-146Y	Tuscan Bronze	1	$167

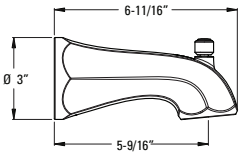

Technical Info

Features:
- All Metal
- IP & Quick Connect Diverted Spout

Marielle® Tub Spout

Model	Finish	Case Qty	List Price
92Ø-224A	Polished Chrome	1	$98
92Ø-224J	Brushed Nickel	1	$112
92Ø-224D	Polished Nickel	1	$112
92Ø-224Y	Tuscan Bronze	1	$122

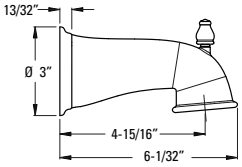

Technical Info

Features:
- All Metal
- IP & Quick Connect Diverted Spout

	Model	Finish	Case Qty	List Price	Technical Info
Contempra® Tub Spout	92Ø-227A	Polished Chrome	1	$80	**Features:** · All Metal · IP Threaded Diverted Spout
	92Ø-227J	Brushed Nickel	1	$100	
	92Ø-227B	Matte Black	1	$88	
	92Ø-227BG	Brushed Gold	1	$94	

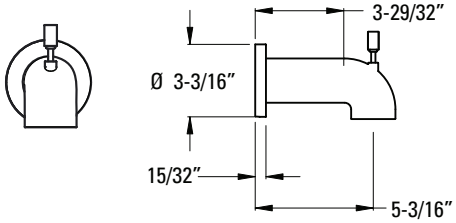

	Model	Finish	Case Qty	List Price	Technical Info
Deckard™ Tub Spout	92Ø-2Ø8A	Polished Chrome	1	$78	**Features:** · All Metal · IP & Quick Connect Diverted Spout
	92Ø-2Ø8J	Brushed Nickel	1	$95	
	92Ø-2Ø8B	Tuscan Bronze	1	$103	

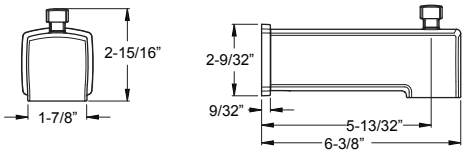

	Model	Finish	Case Qty	List Price	Technical Info
Northcott™ Tub Spout	92Ø-176A	Polished Chrome	1	$136	**Features:** · All Metal · IP & Quick Connect Diverted Spout
	92Ø-176J	Brushed Nickel	1	$153	
	92Ø-176Y	Tuscan Bronze	1	$164	

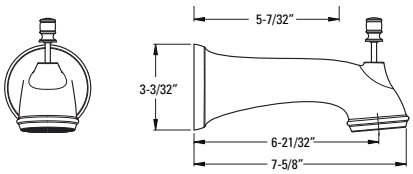

	Model	Finish	Case Qty	List Price	Technical Info
Bronson® Tub Spout	92Ø-Ø66A	Polished Chrome	1	$76	**Features:** · All Metal · IP & Quick Connect Diverted Spout
	92Ø-Ø66J	Brushed Nickel	1	$93	
	92Ø-Ø66Y	Tuscan Bronze	1	$108	

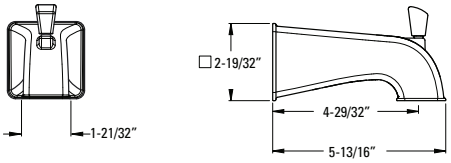

	Model	Finish	Case Qty	List Price	Technical Info
Avalon™ Tub Spout	92Ø-523A	Polished Chrome	1	$80	**Features:** · All Metal · IP & Quick Connect Diverted Spout
	92Ø-523J	Brushed Nickel	1	$100	
	92Ø-523Y	Tuscan Bronze	1	$100	

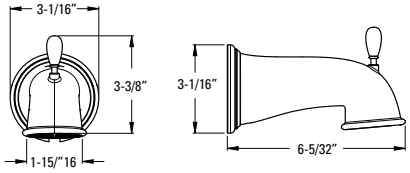

Weller™ Tub Spout	92Ø-186A	Polished Chrome	1	$72	**Features:** · All Metal · IP & Quick Connect Diverted Spout
	92Ø-186J	Brushed Nickel	1	$93	
	92Ø-186Y	Tuscan Bronze	1	$106	

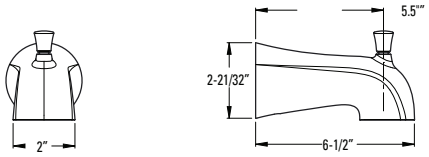

Standard Tub Spout	92Ø-216A	Polished Chrome	3	$28	**Features:** · All Metal · Quick Connect Diverted Spout

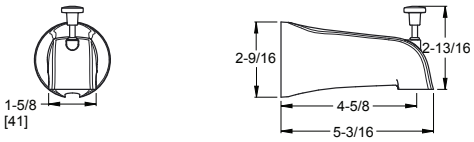

Standard Tub Spout	92Ø-217A	Polished Chrome	3	$41	**Features:** · All Metal · IP Threaded Diverted Spout
	92Ø-217J	Brushed Nickel	3	$79	

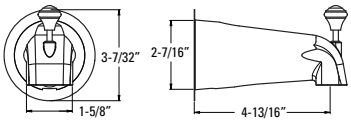

Showers

Non-Diverted Tub Spout

Model	Finish	Case Qty	List Price
92Ø-911A	Polished Chrome	1	$110
92Ø-911J	Brushed Nickel	1	$95
92Ø-911Y	Tuscan Bronze	1	$121
92Ø-911U	Rustic Bronze	1	$108

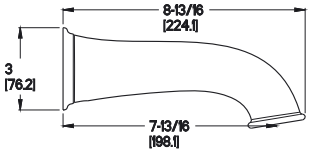

Technical Info

Features:
- All Metal
- Quick Connect Non-Diverting Spout

Diverter Valve and Trim Kit

Ø15-38BC	Polished Chrome	4	$116

Features:
- Complete Valve and Trim
- Lever Handle, Sleeve and Flange
- 4-Port, 2-Way Diverter
- 1/2" IP Female Threaded Inlets and Outlets
- Does Not Support Shared Functionality
- Supports Showerhead and/or Hand Shower

Roman Tub Hand Held Shower Kit

SHOWROOM PREFERRED

LG15-4Ø7C	Polished Chrome	4	$342
LG15-4Ø7K	Brushed Nickel	4	$434
LG15-4Ø7Y	Tuscan Bronze	4	$492
LG15-4Ø7U	Rustic Bronze	4	$526

Hand Shower 1.8 gpm @ 80 psi

Features:
- Complete Valve, Trim and Hand Shower
- 1/2" 2-Way Connection: IP or Direct Sweat
- Flexible Supply Needed for IP Connection

Diverter Cartridge

974-8ØØØ	N/A	1	$122

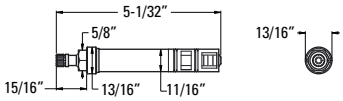

Features:
- Converts Push-Pull Diverter to Twist-Turn
- For Use with Ø15-38B* Diverter Only

CEC Compliant | Cal Green Compliant | Meets EPA WaterSense℠ Standards | NSF Lead-Free Certified | ADA Compliant | UltraSeal™ | SecurePfit™

Turnstop Type Waste & Overflow

Model	Finish	Case Qty	List Price
Ø18-31ØK	Brushed Nickel	3	$180
018-31ØB	Matte Black	3	$190
Ø18-31ØY	Tuscan Bronze	3	$206
Ø18-31ØBG	Brushed Gold	3	$211

Technical Info

Features:
- Turnstop
- 1 1/2" 20 Gauge

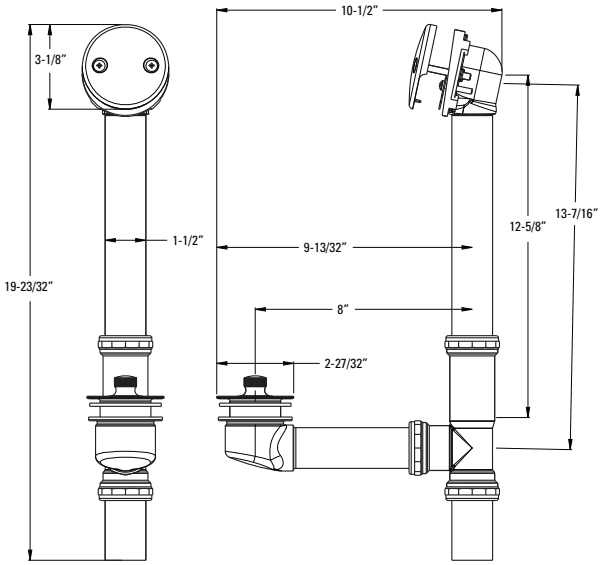

Trip Lever Type Waste & Overflow

Ø19-Ø2ØØ	Polished Chrome	12	$95

Features:
- Trip Lever
- 1 1/2" 20 Gauge

Trip Lever Type Waste & Overflow

Ø19-112Ø	Polished Chrome	1	$110

Features:
- Trip Lever
- 1 1/2" 17 Gauge with Brass Nuts
- Cast Iron Tub Applications

CEC Compliant | Cal Green Compliant | Meets EPA WaterSense℠ Standards | NSF Lead-Free Certified | ADA Compliant | UltraSeal™ | SecurePfit™

	Model	Finish	Case Qty	List Price
Trip Lever Type Waste & Overflow	Ø19-21ØØ	Polished Chrome	12	$68

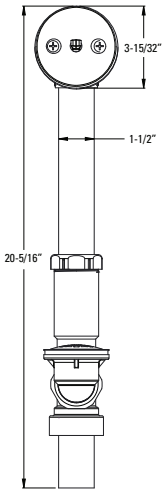

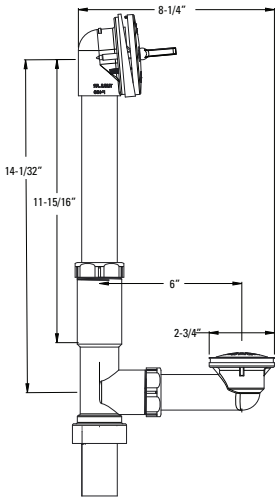

Technical Info

Features:
- Strainer
- 1 1/2" 20 Gauge
- Metal Face Plate
- Accepts Schedule 40 Solvent Weld Tailpiece

Showers

1/2” Thermostatic

Achieve precise control in water temperature and pressure without a messy upgrade project. Thermostatic trims enable you to adjust your water pressure while maintaining the perfect temperature. With a simple cartridge exchange you can easily upgrade your pressure balance shower to a thermostatic shower without changing your in-wall shower valve.

Frequently Asked Questions

How can I distinguish between the pressure balancing cartridge & thermostatic cartridge?
Besides the geometric differences (the thermostatic is much larger in size both diametrically as well as laterally), the thermostatic cartridge has a TYPE T marking on the top of the bonnet to facilitate inspection even with the finished wall in place.

Can customers order the valve body without the cartridge already installed?
Yes, the VB8 skus are valve-only castings with a test plug included. This allows the customers to rough-in the casting and determine the cartridge and trim type at a later date.

Does the thermostatic cartridge support a back-to-back installation?
Yes, if the inlet lines were switched during the rough-in, simply flip the cartridge 180 degrees when inserting it into the valve body.

What type of test plug is provided with the VB8 casting skus?
A full test plug is provided with the VB8 casting which allows plumbers to quickly test the lines for leaks.

Is it necessary to plumb the outlet through the tub port and plug the shower port on the valve body?
No, it is not necessary to plumb the shower head & body sprays through the tub port of the valve body. However, it is recommended in order to achieve the maximum flow attainable and provide the finest shower experience for the user.

How many outlets (showerheads, body sprays, etc) can the TX9 thermostatic cartridge support?
The TX9 cartridge delivers 7gpm @ 60psi and can support a showerhead and up to 2 body sprays. For more shower outlets, additional valves will be required upon rough-in.

How can the same product that delivers 7gpm @ 60 psi also be considered a green product?
The thermostatic valve is regulated by fluctuations in temperature, not pressure. Thus, the thermostatic cartridge can deliver outstanding performance at lower than normal (<2.0gpm) pressure and flow rates.

SHOWROOM PREFERRED

How to order a 1/2” Thermostatic Shower System

Rough-In
Choose the desired rough-in valve

+

Thermostatic Cartridge
TX9-ØØØ1

+

Trim
Select trim

=

1/2" Thermostatic Shower Trim

Available Products

Thermostatic Trim Kits

Chrome
LG89-8TUC

Chrome
LG89-7TUC

Chrome
R89-1TU

Thermostatic

CEC Compliant | Cal Green Compliant | Meets EPA WaterSense℠ Standards | NSF Lead-Free Certified | ADA Compliant | UltraSeal™ | SecurePfit™

1/2" Thermostatic Shower System

1/2" Thermostatic Series Tub & Shower Trim

Model	Finish	Case Qty	List Price
LG89-8TUC	Polished Chrome	3	$331
LG89-8TUK	Brushed Nickel	3	$393
LG89-8TUY	Tuscan Bronze	3	$452

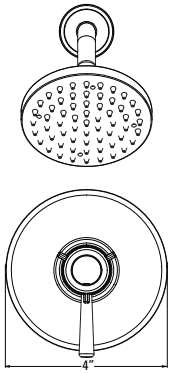

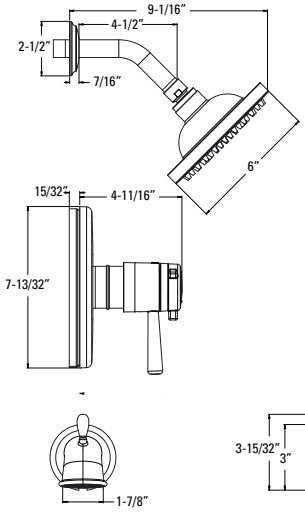

Technical Info

Features:
- Metal Lever Handle
- Hot/Cold Indicator
- Handle Adjusts Volume
- Dial Adjusts Temperature
- Decorative Raincan Showerhead
- Easy To Clean Spray Nozzles
- IP Threaded Metal Diverter Tub Spout
- Quick Trim Wall Flange
- Showerhead 1.8 gpm @ 80 psi

Must Order 1/2" Thermostatic Rough In Valve Separately. See Valve Section.

1/2" Thermostatic Series Shower Trim

LG89-7TUC	Polished Chrome	3	$237
LG89-7TUK	Brushed Nickel	3	$331
LG89-7TUY	Tuscan Bronze	3	$434

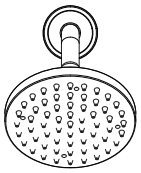

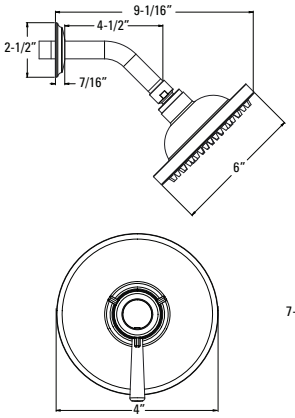

Features:
- Metal Lever Handle
- Hot/Cold Indicator
- Handle Adjusts Volume
- Dial Adjusts Temperature
- Decorative Raincan Showerhead
- Easy To Clean Spray Nozzles
- Quick Trim Wall Flange
- Showerhead 1.8 gpm @ 80 psi

Must Order 1/2" Thermostatic Rough In Valve Separately. See Valve Section.

SHOWROOM PREFERRED

	Model	Finish	Case Qty	List Price
1/2" Thermostatic Valve Only Trim	R89-1TUC	Polished Chrome	3	$201
	R89-1TUK	Brushed Nickel	3	$242
	R89-1TUY	Tuscan Bronze	3	$262

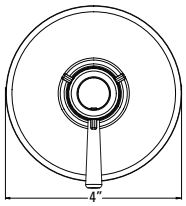

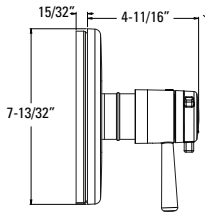

Technical Info

Features:
- Metal Lever Handle
- Hot/Cold Indicator
- Handle Adjusts Volume
- Dial Adjusts Temperature
- Quick Trim Wall Flange

Must Order 1/2" Thermostatic Rough In Valve Separately. See Valve Section.

Thermostatic

CEC Compliant | Cal Green Compliant | Meets EPA WaterSense℠ Standards | NSF Lead-Free Certified | ADA Compliant | UltraSeal™ | SecurePfit™

Common Installation

Showerhead & Hand Shower

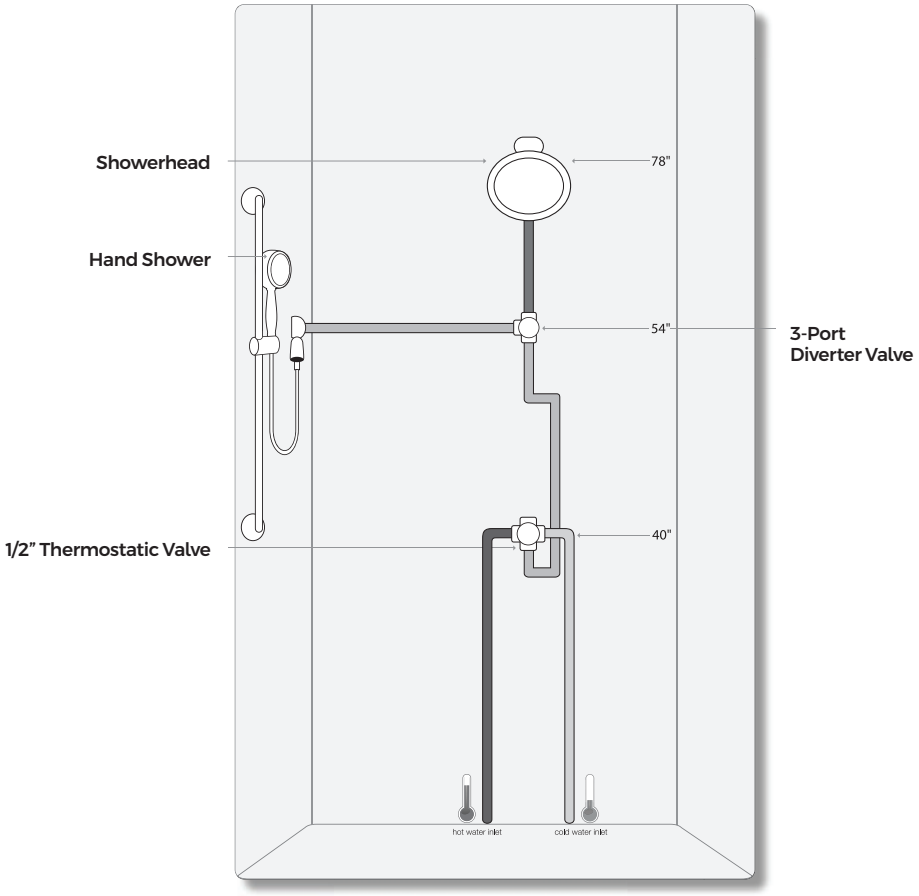

Bath Accessories

The finishing touches that bring a stylish bathroom together. Our hardware and accessories are designed to complement your Pfister bath fixtures perfectly

Rhen™ - Accessories

18" Towel Bar

Model	Finish	Case Qty	List Price
BTB-RH1C	Polished Chrome	3	$125
BTB-RH1K	Brushed Nickel	3	$136
BTB-RH1B	Matte Black	3	$148
BTB-RH1BG	Brushed Gold	3	$161

Technical Info

Holes: · 2-Hole

Features:
- Premium Metal Construction
- Superior Mounting Posts
- Concealed Screw Installation
- Mounting Hardware Included

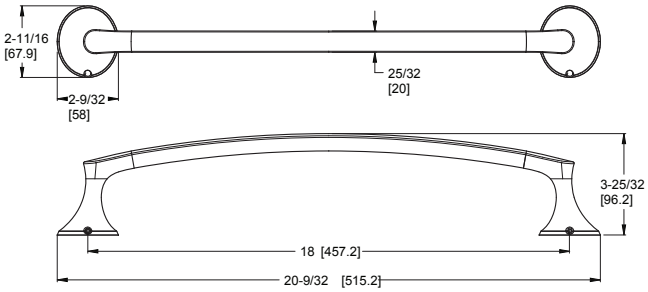

24" Double Towel Bar

BTB-RH2C	Polished Chrome	3	$181
BTB-RH2K	Brushed Nickel	3	$192
BTB-RH2B	Matte Black	3	$204
BTB-RH2BG	Brushed Gold	3	$216

Holes: · 2-Hole

Features:
- Premium Metal Construction
- Superior Mounting Posts
- Concealed Screw Installation
- Mounting Hardware Included

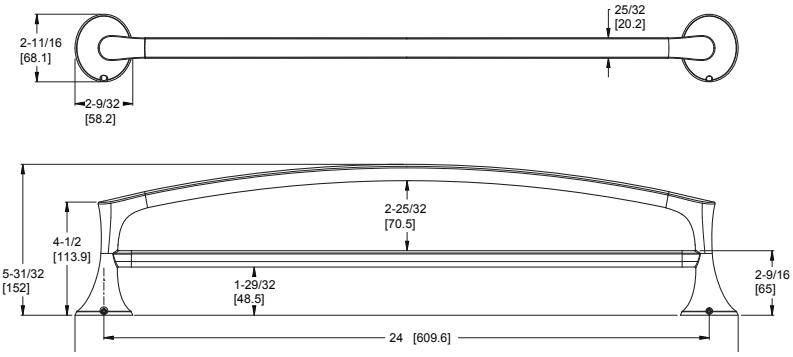

Towel Ring

BRB-RHØC	Polished Chrome	3	$96
BRB-RHØK	Brushed Nickel	3	$108
BRB-RHØB	Matte Black	3	$120
BRB-RHØBG	Brushed Gold	3	$131

Holes: · 1-Hole

Features:
- Premium Metal Construction
- Superior Mounting Posts
- Concealed Screw Installation
- Mounting Hardware Included

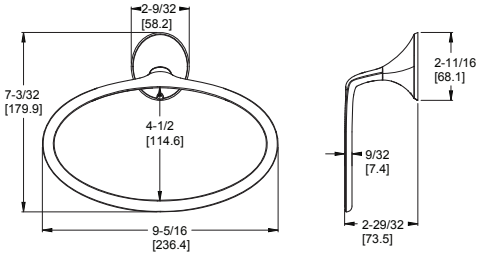

SHOWROOM PREFERRED

Paper Holder

Model	Finish	Case Qty	List Price
BPH-RHØC	Polished Chrome	3	$93
BPH-RHØK	Brushed Nickel	3	$111
BPH-RHØB	Matte Black	3	$123
BPH-RHØBG	Brushed Gold	3	$134

Technical Info

Holes: · 2-Hole

Features:
- Premium Metal Construction
- Pivot Swing Paper Mount
- Concealed Screw Installation
- Mounting Hardware Included

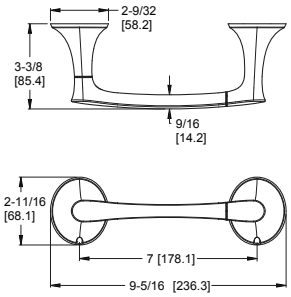

Robe Hook

Model	Finish	Case Qty	List Price
BRH-RHØC	Polished Chrome	3	$65
BRH-RHØK	Brushed Nickel	3	$76
BRH-RHØB	Matte Black	3	$88
BRH-RHØBG	Brushed Gold	3	$100

Holes: · 1-Hole

Features:
- Premium Metal Construction
- Superior Mounting Posts
- Concealed Screw Installation
- Mounting Hardware Included

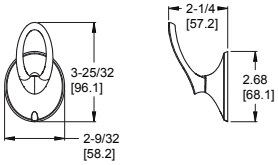

Bath Accessories

Kenzo™ - Accessories

18" Towel Bar

Model	Finish	Case Qty	List Price
BTB-DF1C	Polished Chrome	3	$119
BTB-DF1K	Brushed Nickel	3	$180
BTB-DF1B	Matte Black	3	$185

Technical Info

Holes: · 2-Hole

Features:
- Premium Metal Construction
- Superior Mounting Posts
- Concealed Screw Installation
- Mounting Hardware Included

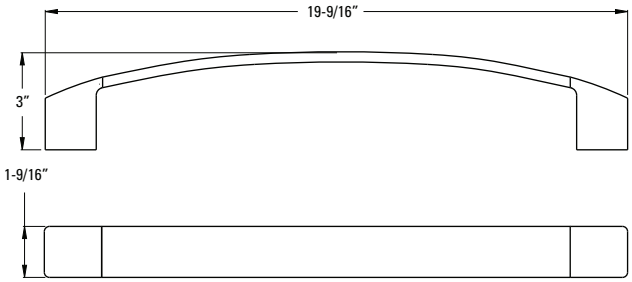

24" Towel Bar

BTB-DF2C	Polished Chrome	3	$146
BTB-DF2K	Brushed Nickel	3	$208
BTB-DF2B	Matte Black	3	$213

Holes: · 2-Hole

Features:
- Premium Metal Construction
- Superior Mounting Posts
- Concealed Screw Installation
- Mounting Hardware Included

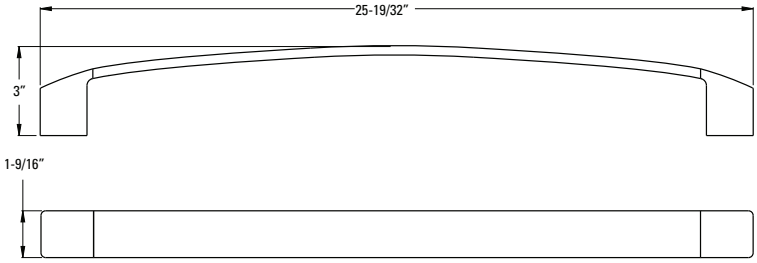

Paper Holder

BRB-DF1C	Polished Chrome	3	$112
BRB-DF1K	Brushed Nickel	3	$158
BRB-DF1B	Matte Black	3	$160

Holes: · 2-Hole

Features:
- Premium Metal Construction
- Superior Mounting Posts
- Concealed Screw Installation
- Mounting Hardware Included

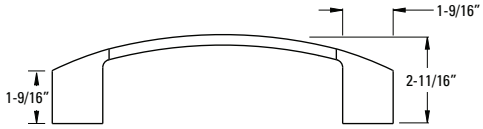

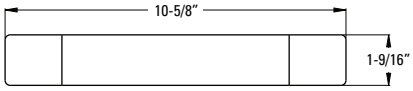

SHOWROOM PREFERRED

Towel Ring

Model	Finish	Case Qty	List Price
BPH-DF1C	Polished Chrome	3	$91
BPH-DF1K	Brushed Nickel	3	$131
BPH-DF1B	Matte Black	3	$132

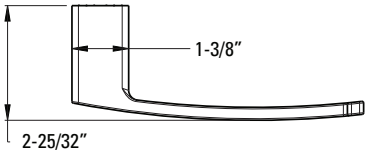

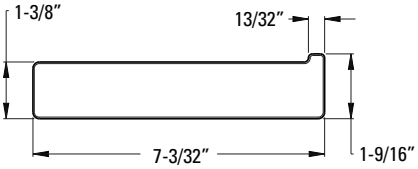

Technical Info

Holes: · 1-Hole

Features:
- Premium Metal Construction
- Superior Mounting Posts
- Concealed Screw Installation
- Mounting Hardware Included

Robe Hook

Model	Finish	Case Qty	List Price
BRH-DF1C	Polished Chrome	3	$70
BRH-DF1K	Brushed Nickel	3	$103
BRH-DF1B	Matte Black	3	$104

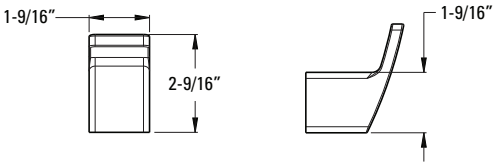

Holes: · 1-Hole

Features:
- Premium Metal Construction
- Superior Mounting Posts
- Concealed Screw Installation
- Mounting Hardware Included

Ashfield™ - Accessories

24" Towel Bar

Model	Finish	Case Qty	List Price
BTB-YP2C	Polished Chrome	4	$80
BTB-YP2K	Brushed Nickel	4	$122
BTB-YP2Y	Tuscan Bronze	4	$127
BTB-YP2U	Rustic Bronze	4	$127

Technical Info

Holes: · 2-Hole

Features:
- Premium Metal Construction
- Superior Mounting Posts
- Concealed Screw Installation
- Mounting Hardware Included

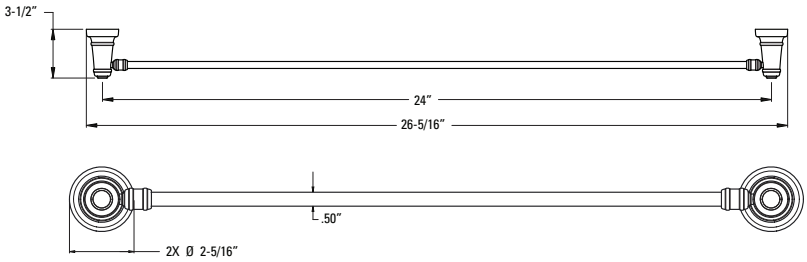

24" Double Towel Bar

BTB-YP5C	Polished Chrome	4	$147
BTB-YP5K	Brushed Nickel	4	$223
BTB-YP5Y	Tuscan Bronze	4	$248
BTB-YP5U	Rustic Bronze	4	$223

Holes: · 2-Hole

Features:
- Premium Metal Construction
- Superior Mounting Posts
- Concealed Screw Installation
- Mounting Hardware Included

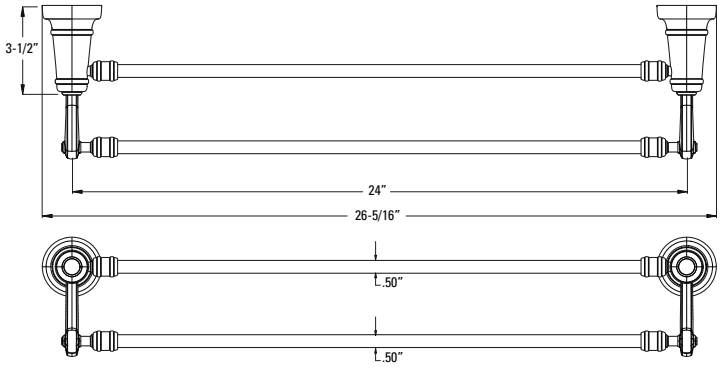

Towel Ring

BRB-YPØC	Polished Chrome	4	$58
BRB-YPØK	Brushed Nickel	4	$87
BRB-YPØY	Tuscan Bronze	4	$92
BRB-YPØU	Rustic Bronze	4	$92

Holes: · 1-Hole

Features:
- Premium Metal Construction
- Superior Mounting Posts
- Concealed Screw Installation
- Mounting Hardware Included

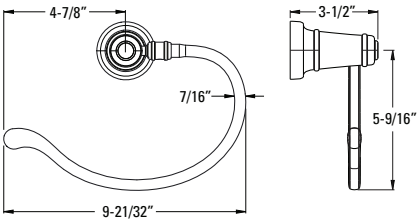

SHOWROOM PREFERRED

Paper Holder

Model	Finish	Case Qty	List Price
BPH-YP1C	Polished Chrome	4	$64
BPH-YP1K	Brushed Nickel	4	$93
BPH-YP1Y	Tuscan Bronze	4	$94
BPH-YP1U	Rustic Bronze	4	$114

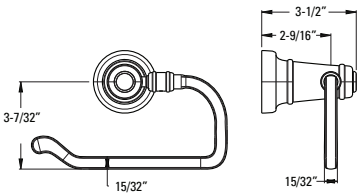

Technical Info

Holes: · 1-Hole

Features:
- Premium Metal Construction
- Superior Mounting Posts
- Concealed Screw Installation
- Mounting Hardware Included

Robe Hook

BRH-YPØC	Polished Chrome	4	$37
BRH-YPØK	Brushed Nickel	4	$52
BRH-YPØY	Tuscan Bronze	4	$60
BRH-YPØU	Rustic Bronze	4	$55

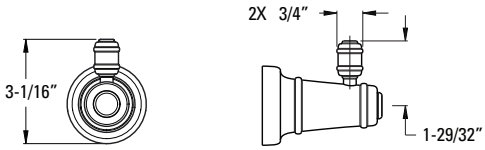

Holes: · 1-Hole

Features:
- Premium Metal Construction
- Superior Mounting Posts
- Concealed Screw Installation
- Mounting Hardware Included

18" Towel Bar

Model	Finish	Case Qty	List Price
BTB-DE1C	Polished Chrome	3	$101
BTB-DE1K	Brushed Nickel	3	$113
BTB-DE1D	Polished Nickel	3	$113
BTB-DE1Y	Tuscan Bronze	3	$129

Technical Info

Holes: · 2-Hole

Features:
· Premium Metal Construction
· Superior Mounting Posts
· Concealed Screw Installation
· Mounting Hardware Included

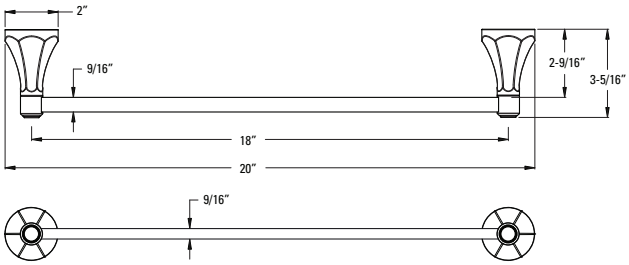

24" Towel Bar

Model	Finish	Case Qty	List Price
BTB-DE2C	Polished Chrome	3	$116
BTB-DE2K	Brushed Nickel	3	$129
BTB-DE2D	Polished Nickel	3	$129
BTB-DE2Y	Tuscan Bronze	3	$148

Holes: · 2-Hole

Features:
· Premium Metal Construction
· Superior Mounting Posts
· Concealed Screw Installation
· Mounting Hardware Included

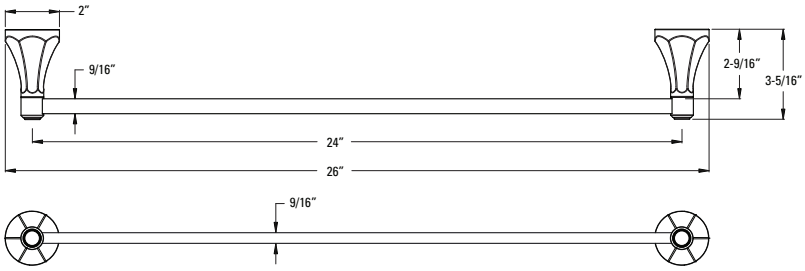

Towel Ring

Model	Finish	Case Qty	List Price
BRB-DEØC	Polished Chrome	3	$77
BRB-DEØK	Brushed Nickel	3	$94
BRB-DEØD	Polished Nickel	3	$94
BRB-DEØY	Tuscan Bronze	3	$108

Holes: · 1-Hole

Features:
· Premium Metal Construction
· Superior Mounting Posts
· Concealed Screw Installation
· Mounting Hardware Included

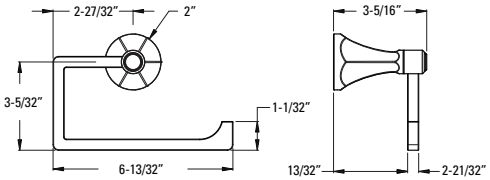

SHOWROOM PREFERRED

Paper Holder

Model	Finish	Case Qty	List Price
BPH-DEØC	Polished Chrome	3	$77
BPH-DEØK	Brushed Nickel	3	$94
BPH-DEØD	Polished Nickel	3	$94
BPH-DEØY	Tuscan Bronze	3	$110

Technical Info

Holes: · 2-Hole

Features:
- Swivel Mount Paper Holder
- Premium Metal Construction
- Superior Mounting Posts
- Concealed Screw Installation
- Mounting Hardware Included

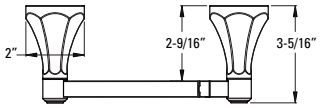

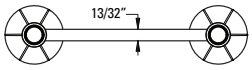

Robe Hook

BRH-DEØC	Polished Chrome	3	$41
BRH-DEØK	Brushed Nickel	3	$46
BRH-DEØD	Polished Nickel	3	$46
BRH-DEØY	Tuscan Bronze	3	$52

Holes: · 1-Hole

Features:
- Premium Metal Construction
- Superior Mounting Posts
- Concealed Screw Installation
- Mounting Hardware Included

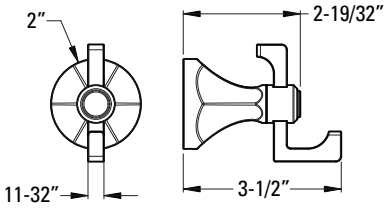

18" Towel Bar

Model	Finish	Case Qty	List Price
BTB-MB1C	Polished Chrome	3	$74
BTB-MB1K	Brushed Nickel	3	$88
BTB-MB1Y	Tuscan Bronze	3	$104

Technical Info

Holes: · 2-Hole

Features:
· Premium Metal Construction
· Superior Mounting Posts
· Concealed Screw Installation
· Mounting Hardware Included

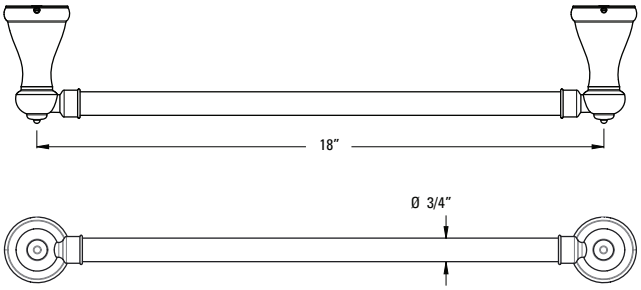

24" Towel Bar

BTB-MB2C	Polished Chrome	3	$103
BTB-MB2K	Brushed Nickel	3	$115
BTB-MB2Y	Tuscan Bronze	3	$131

Holes: · 2-Hole

Features:
· Premium Metal Construction
· Superior Mounting Posts
· Concealed Screw Installation
· Mounting Hardware Included

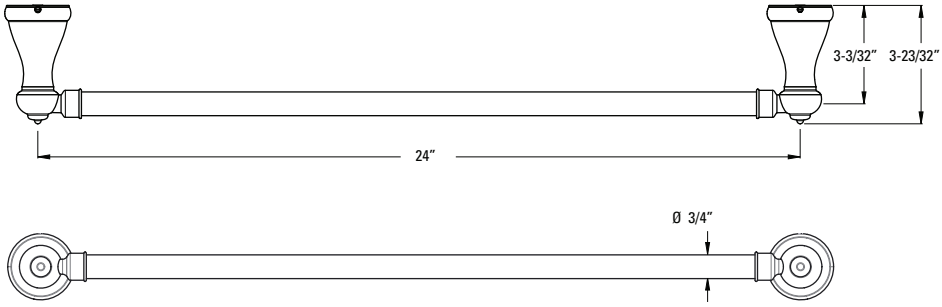

Towel Ring

BRB-MB1C	Polished Chrome	3	$53
BRB-MB1K	Brushed Nickel	3	$66
BRB-MB1Y	Tuscan Bronze	3	$81

Holes: · 1-Hole

Features:
· Premium Metal Construction
· Superior Mounting Posts
· Concealed Screw Installation
· Mounting Hardware Included

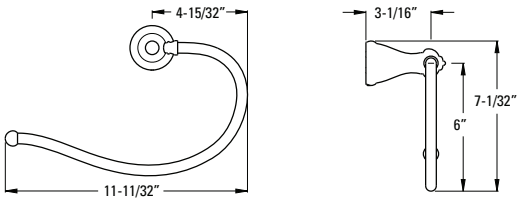

Paper Holder

Model	Finish	Case Qty	List Price
BPH-MB1C	Polished Chrome	3	$63
BPH-MB1K	Brushed Nickel	3	$76
BPH-MB1Y	Tuscan Bronze	3	$84

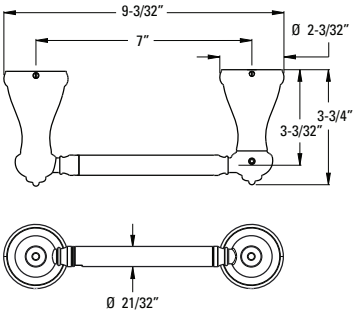

Technical Info

Holes: · 2-Hole

Features:
- Swivel Mount Paper Holder
- Premium Metal Construction
- Superior Mounting Posts
- Concealed Screw Installation
- Mounting Hardware Included

Robe Hook

Model	Finish	Case Qty	List Price
BRH-MB1C	Polished Chrome	3	$32
BRH-MB1K	Brushed Nickel	3	$47
BRH-MB1Y	Tuscan Bronze	3	$61

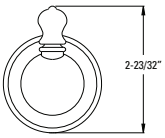

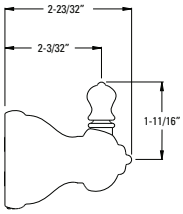

Holes: · 1-Hole

Features:
- Premium Metal Construction
- Superior Mounting Posts
- Concealed Screw Installation
- Mounting Hardware Included

18" Towel Bar

Model	Finish	Case Qty	List Price
BTB-NC1C	Polished Chrome	3	$65
BTB-NC1K	Brushed Nickel	3	$90
BTB-NC1B	Matte Black	3	$94
BTB-NC1BG	Brushed Gold	3	$115

Technical Info

Holes: · 2-Hole

Features:
· Premium Metal Construction
· Superior Mounting Bracket
· Concealed Screw Installation
· Mounting Hardware Included

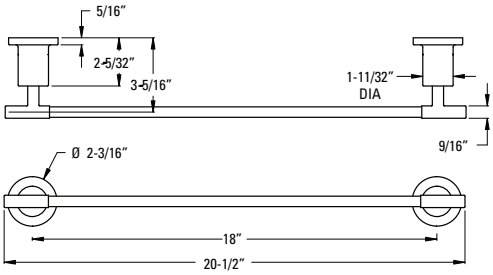

24" Towel Bar

Model	Finish	Case Qty	List Price
BTB-NC2C	Polished Chrome	3	$70
BTB-NC2K	Brushed Nickel	3	$95
BTB-NC2B	Matte Black	3	$106
BTB-NC2BG	Brushed Gold	3	$126

Holes: · 2-Hole

Features:
· Premium Metal Construction
· Superior Mounting Bracket
· Concealed Screw Installation
· Mounting Hardware Included

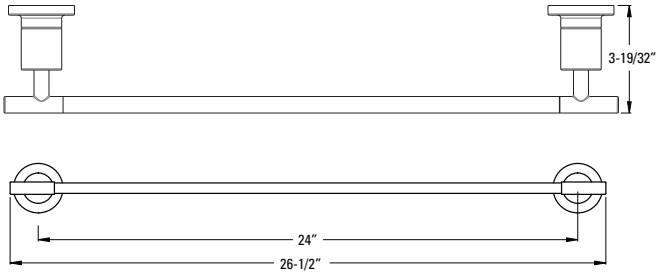

Towel Ring

Model	Finish	Case Qty	List Price
BRB-NC1C	Polished Chrome	3	$52
BRB-NC1K	Brushed Nickel	3	$65
BRB-NC1B	Matte Black	3	$77
BRB-NC1BG	Brushed Gold	3	$92

Holes: · 1-Hole

Features:
· Premium Metal Construction
· Superior Mounting Bracket
· Concealed Screw Installation
· Mounting Hardware Included

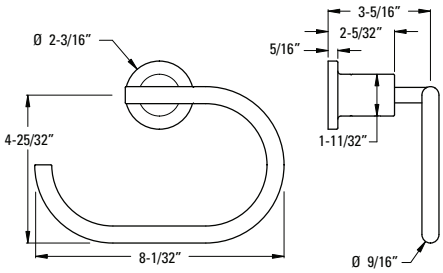

SHOWROOM PREFERRED

Paper Holder

Model	Finish	Case Qty	List Price
BPH-NC1C	Polished Chrome	3	$52
BPH-NC1K	Brushed Nickel	3	$70
BPH-NC1B	Matte Black	3	$77
BPH-NC1BG	Brushed Gold	3	$92

Technical Info

Holes: · 2-Hole

Features:
· Swivel Mount Paper Holder
· Premium Metal Construction
· Superior Mounting Bracket
· Concealed Screw Installation
· Mounting Hardware Included

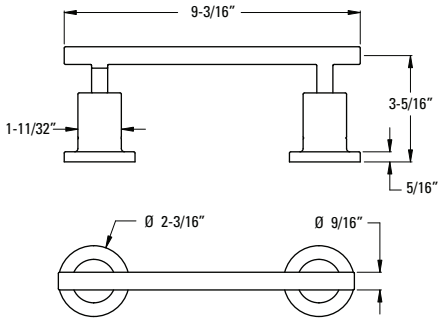

Robe Hook

Model	Finish	Case Qty	List Price
BRH-NC1C	Polished Chrome	3	$39
BRH-NC1K	Brushed Nickel	3	$52
BRH-NC1B	Matte Black	3	$58
BRH-NC1BG	Brushed Gold	3	$68

Holes: · 1-Hole

Features:
· Premium Metal Construction
· Superior Mounting Bracket
· Concealed Screw Installation
· Mounting Hardware Included

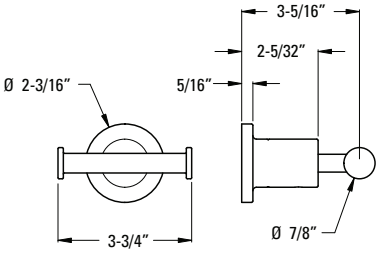

18" Towel Bar

Model	Finish	Case Qty	List Price
BTB-DA1C	Polished Chrome	3	$62
BTB-DA1K	Brushed Nickel	3	$67
BTB-DA1B	Matte Black	3	$73

Technical Info

Holes: · 2-Hole

Features:
- All Metal Construction
- Superior Mounting Brackets
- Concealed Screw Installation
- Mounting Hardware Included

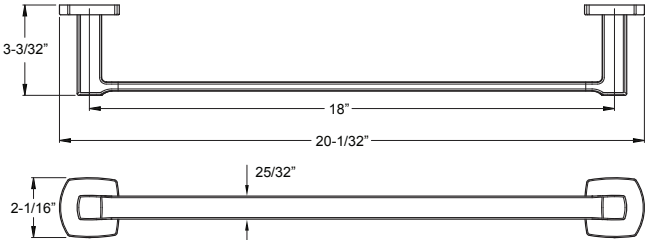

24" Towel Bar

Model	Finish	Case Qty	List Price
BTB-DA2C	Polished Chrome	3	$64
BTB-DA2K	Brushed Nickel	3	$69
BTB-DA2B	Matte Black	3	$77

Holes: · 2-Hole

Features:
- All Metal Construction
- Superior Mounting Brackets
- Concealed Screw Installation
- Mounting Hardware Included

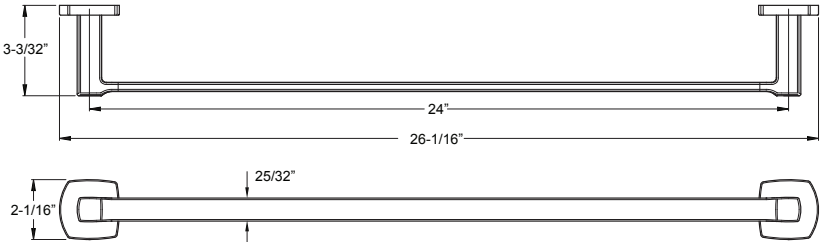

Towel Ring

Model	Finish	Case Qty	List Price
BRB-DA1C	Polished Chrome	3	$44
BRB-DA1K	Brushed Nickel	3	$47
BRB-DA1B	Matte Black	3	$51

Holes: · 1-Hole

Features:
- All Metal Construction
- Superior Mounting Brackets
- Concealed Screw Installation
- Mounting Hardware Included

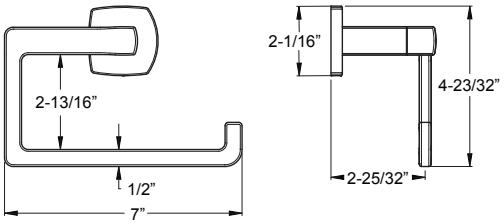

Paper Holder

Model	Finish	Case Qty	List Price
BPH-DA1C	Polished Chrome	3	$52
BPH-DA1K	Brushed Nickel	3	$60
BPH-DA1B	Matte Black	3	$64

Technical Info

Holes: · 2-Hole

Features:
· All Metal Construction
· Superior Mounting Brackets
· Concealed Screw Installation
· Mounting Hardware Included

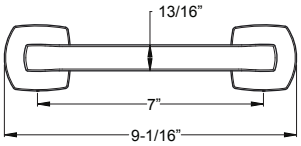

Robe Hook

BRH-DA1C	Polished Chrome	3	$34
BRH-DA1K	Brushed Nickel	3	$38
BRH-DA1B	Matte Black	3	$42

Holes: · 1-Hole

Features:
· All Metal Construction
· Superior Mounting Brackets
· Concealed Screw Installation
· Mounting Hardware Included

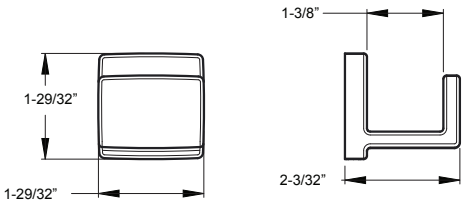

18" Towel Bar

Model	Finish	Case Qty	List Price
BTB-MG1C	Polished Chrome	3	$60
BTB-MG1K	Brushed Nickel	3	$65
BTB-MG1Y	Tuscan Bronze	3	$71

Technical Info

Holes: · 2-Hole

Features:
· All Metal Construction
· Superior Mounting Bracket
· Concealed Screw Installation
· Mounting Hardware Included

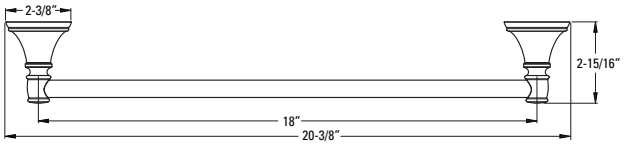

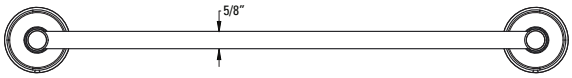

24" Towel Bar

BTB-MG2C	Polished Chrome	3	$62
BTB-MG2K	Brushed Nickel	3	$67
BTB-MG2Y	Tuscan Bronze	3	$73

Holes: · 2-Hole

Features:
· All Metal Construction
· Superior Mounting Bracket
· Concealed Screw Installation
· Mounting Hardware Included

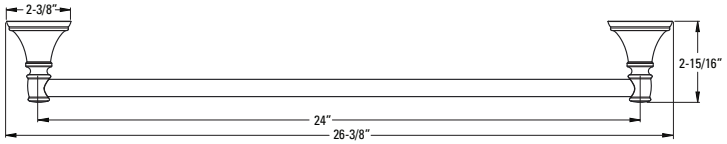

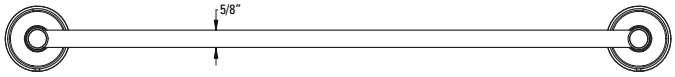

Towel Ring

BRB-MG1C	Polished Chrome	3	$43
BRB-MG1K	Brushed Nickel	3	$46
BRB-MG1Y	Tuscan Bronze	3	$50

Holes: · 1-Hole

Features:
· All Metal Construction
· Superior Mounting Bracket
· Concealed Screw Installation
· Mounting Hardware Included

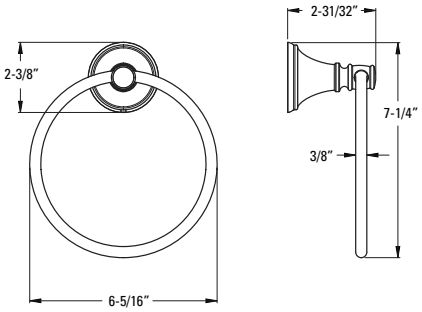

Paper Holder

Model	Finish	Case Qty	List Price
BPH-MG1C	Polished Chrome	3	$50
BPH-MG1K	Brushed Nickel	3	$57
BPH-MG1Y	Tuscan Bronze	3	$62

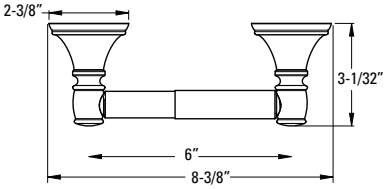

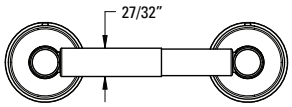

Technical Info

Holes: · 2-Hole

Features:
- All Metal Construction
- Superior Mounting Bracket
- Concealed Screw Installation
- Mounting Hardware Included

Robe Hook

Model	Finish	Case Qty	List Price
BRH-MG1C	Polished Chrome	3	$34
BRH-MG1K	Brushed Nickel	3	$38
BRH-MG1Y	Tuscan Bronze	3	$44

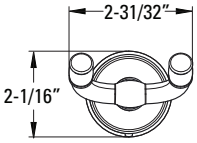

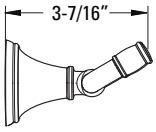

Holes: · 1-Hole

Features:
- All Metal Construction
- Superior Mounting Bracket
- Concealed Screw Installation
- Mounting Hardware Included

18" Towel Bar

Model	Finish	Case Qty	List Price
BTB-BS1C	Polished Chrome	3	$60
BTB-BS1K	Brushed Nickel	3	$65
BTB-BS1Y	Tuscan Bronze	3	$71

Technical Info

Holes: · 2-Hole

Features:
· Premium Metal Construction
· Superior Mounting Posts
· Concealed Screw Installation
· Mounting Hardware Included

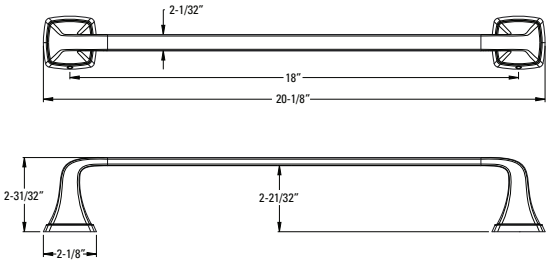

24" Towel Bar

Model	Finish	Case Qty	List Price
BTB-BS2C	Polished Chrome	3	$62
BTB-BS2K	Brushed Nickel	3	$67
BTB-BS2Y	Tuscan Bronze	3	$73

Holes: · 2-Hole

Features:
· Premium Metal Construction
· Superior Mounting Posts
· Concealed Screw Installation
· Mounting Hardware Included

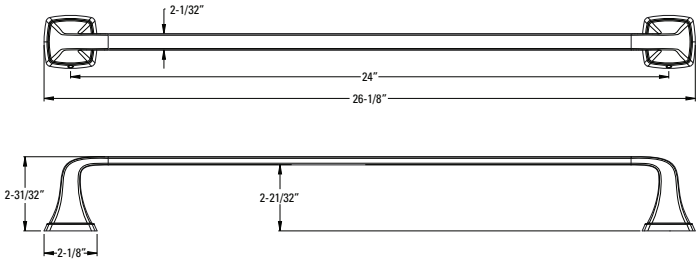

Towel Ring

Model	Finish	Case Qty	List Price
BRB-BS1C	Polished Chrome	3	$43
BRB-BS1K	Brushed Nickel	3	$47
BRB-BS1Y	Tuscan Bronze	3	$51

Holes: · 1-Hole

Features:
· Premium Metal Construction
· Superior Mounting Posts
· Concealed Screw Installation
· Mounting Hardware Included

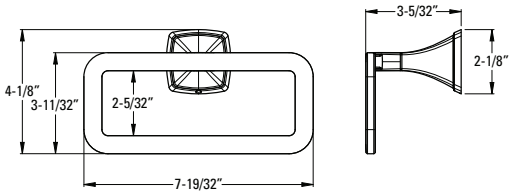

Paper Holder

Model	Finish	Case Qty	List Price
BPH-BS1C	Polished Chrome	3	$50
BPH-BS1K	Brushed Nickel	3	$57
BPH-BS1Y	Tuscan Bronze	3	$62

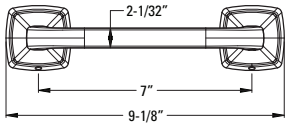

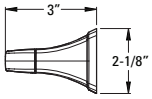

Technical Info

Holes: · 2-Hole

Features:
- Premium Metal Construction
- Superior Mounting Posts
- Concealed Screw Installation
- Mounting Hardware Included

Robe Hook

Model	Finish	Case Qty	List Price
BRH-BS1C	Polished Chrome	3	$29
BRH-BS1K	Brushed Nickel	3	$31
BRH-BS1Y	Tuscan Bronze	3	$34

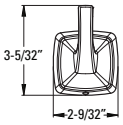

Holes: · 1-Hole

Features:
- Premium Metal Construction
- Superior Mounting Posts
- Concealed Screw Installation
- Mounting Hardware Included

18" Towel Bar

Model	Finish	Case Qty	List Price
BTB-GL1C	Polished Chrome	3	$65
BTB-GL1K	Brushed Nickel	3	$77
BTB-GL1Y	Tuscan Bronze	3	$89

Technical Info

Holes: · 2-Hole

Features:
· All Metal Construction
· Superior Mounting Bracket
· Concealed Screw Installation
· Mounting Hardware Included

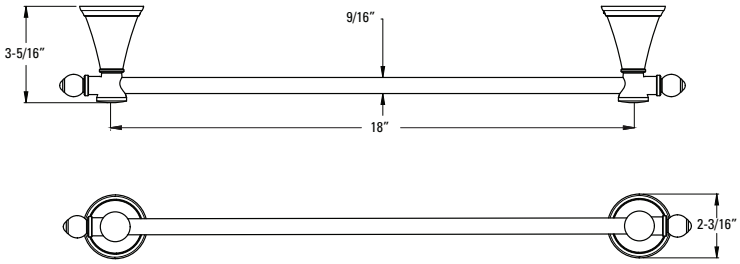

24" Towel Bar

BTB-GL2C	Polished Chrome	3	$70
BTB-GL2K	Brushed Nickel	3	$84
BTB-GL2Y	Tuscan Bronze	3	$94

Holes: · 2-Hole

Features:
· All Metal Construction
· Superior Mounting Bracket
· Concealed Screw Installation
· Mounting Hardware Included

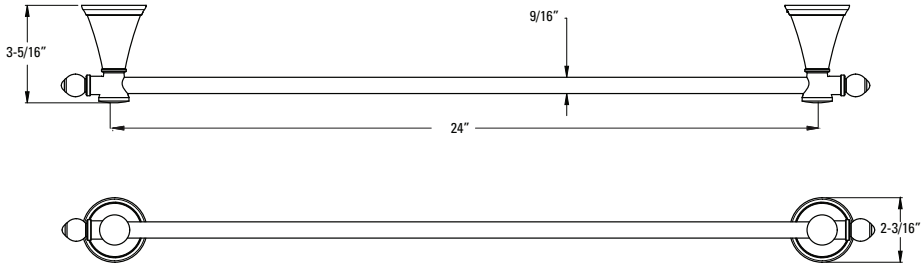

Towel Ring

BRB-GL1C	Polished Chrome	3	$46
BRB-GL1K	Brushed Nickel	3	$58
BRB-GL1Y	Tuscan Bronze	3	$70

Holes: · 1-Hole

Features:
· All Metal Construction
· Superior Mounting Bracket
· Concealed Screw Installation
· Mounting Hardware Included

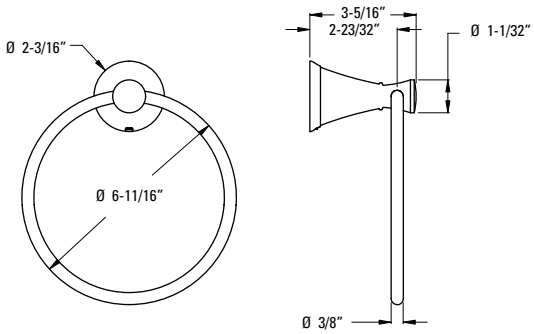

Paper Holder

Model	Finish	Case Qty	List Price
BPH-GL1C	Polished Chrome	3	$46
BPH-GL1K	Brushed Nickel	3	$58
BPH-GL1Y	Tuscan Bronze	3	$70

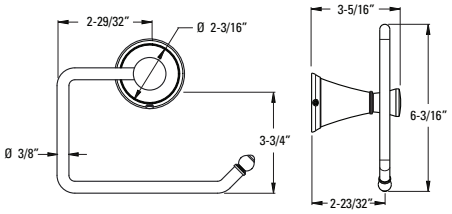

Technical Info

Holes: · 1-Hole

Features:
· All Metal Construction
· Superior Mounting Bracket
· Concealed Screw Installation
· Mounting Hardware Included

Robe Hook

BRH-GL1C	Polished Chrome	3	$27
BRH-GL1K	Brushed Nickel	3	$39
BRH-GL1Y	Tuscan Bronze	3	$52

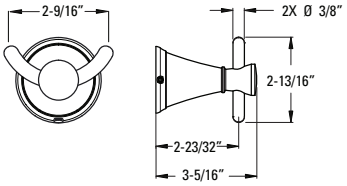

Holes: · 1-Hole

Features:
· All Metal Construction
· Superior Mounting Bracket
· Concealed Screw Installation
· Mounting Hardware Included

24" Towel Bar

Model	Finish	Case Qty	List Price
BTB-CB2C	Polished Chrome	4	$61
BTB-CB2K	Brushed Nickel	4	$90
BTB-CB2Y	Tuscan Bronze	4	$90

Technical Info

Holes: · 2-Hole

Features:
- All Metal Construction
- Superior Mounting Posts
- Concealed Screw Installation
- Mounting Hardware Included

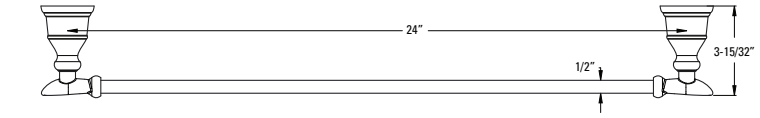

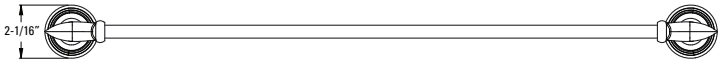

Towel Towel Ring

BRB-CBØC	Polished Chrome	4	$44
BRB-CBØK	Brushed Nickel	4	$65
BRB-CBØY	Tuscan Bronze	4	$65

Holes: · 1-Hole

Features:
- All Metal Construction
- Superior Mounting Posts
- Concealed Screw Installation
- Mounting Hardware Included

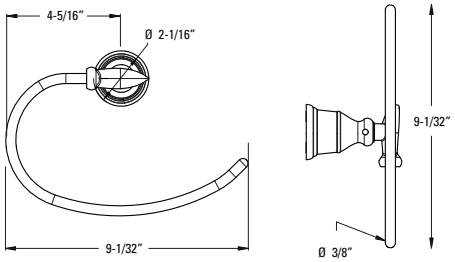

Paper Holder

BPH-CB1C	Polished Chrome	4	$46
BPH-CB1K	Brushed Nickel	4	$69
BPH-CB1Y	Tuscan Bronze	4	$69

Holes: · 1-Hole

Features:
- All Metal Construction
- Superior Mounting Posts
- Concealed Screw Installation
- Mounting Hardware Included

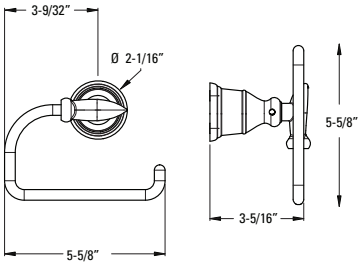

Robe Hook

Model	Finish	Case Qty	List Price
BRH-CBØC	Polished Chrome	4	$29
BRH-CBØK	Brushed Nickel	4	$39
BRH-CBØY	Tuscan Bronze	4	$39

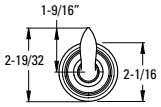

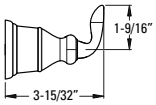

Technical Info

Holes: · 1-Hole

Features:
- All Metal Construction
- Superior Mounting Posts
- Concealed Screw Installation
- Mounting Hardware Included

24" Towel Bar

Model	Finish	Case Qty	List Price
BTB-R2CC	Polished Chrome	6	$37
BTB-R2KK	Brushed Nickel	6	$51
BTB-R2YY	Tuscan Bronze	6	$51

Technical Info

Holes: · 2-Hole

Features:
· All Metal Construction
· Superior Mounting Bracket
· Concealed Screw Installation
· Mounting Hardware Included

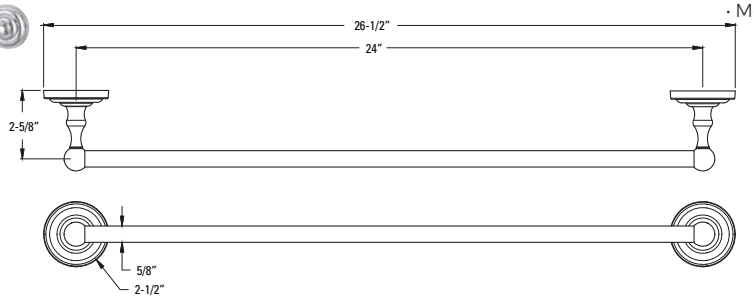

Towel Ring

Model	Finish	Case Qty	List Price
BRB-RØCC	Polished Chrome	6	$23
BRB-RØKK	Brushed Nickel	6	$30
BRB-RØYY	Tuscan Bronze	6	$30

Holes: · 1-Hole

Features:
· All Metal Construction
· Superior Mounting Bracket
· Concealed Screw Installation
· Mounting Hardware Included

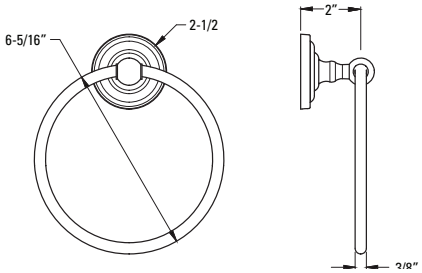

Paper Holder

Model	Finish	Case Qty	List Price
BPH-RØCC	Polished Chrome	6	$25
BPH-RØKK	Brushed Nickel	6	$32
BPH-RØYY	Tuscan Bronze	6	$32

Holes: · 2-Hole

Features:
· All Metal Construction
· Superior Mounting Bracket
· Concealed Screw Installation
· Mounting Hardware Included

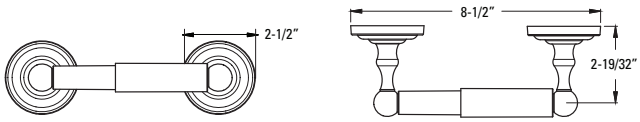

Robe Hook

Model	Finish	Case Qty	List Price
BRH-RØCC	Polished Chrome	6	$14
BRH-RØKK	Brushed Nickel	6	$15
BRH-RØYY	Tuscan Bronze	6	$15

Holes: · 1-Hole

Features:
· All Metal Construction
· Superior Mounting Bracket
· Concealed Screw Installation
· Mounting Hardware Included

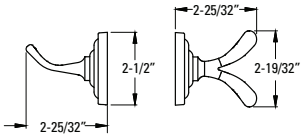

Pfirst Series & Job Packs

This family includes a full-line-up of faucets for kitchen, laundry, lavatory and tub/shower. Even as an opening price point family collection, all of these faucets are covered by the Pfister Pforever Warranty. Superior design and great value, that's what Pfirst Series is all about.

Job Pack. 267

Pull-Down / Pull-Out Kitchen Faucet

Single Handle Pull-Down Kitchen Faucet

Model	Finish	Case Qty	List Price
G529-PF2C	Polished Chrome	3	$203
G529-PF2S	Stainless Steel	3	$224
G529-PF2Y	Tuscan Bronze	3	$248

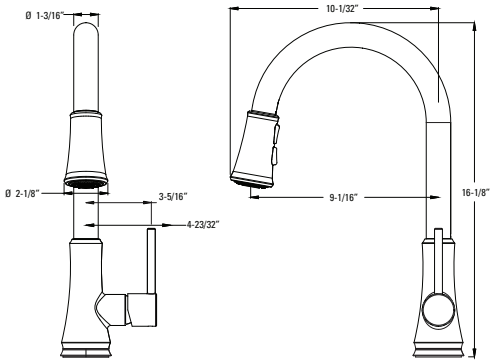

Technical Info

Holes: · 1 or 3-Hole 8" Installation

Features:
- Ceramic Disc Valve
- High Arc Swivel Spout
- Metal Lever Handle
- Three-Function Sprayhead: Stream, Spray, and Pause
- Single Post Mounting Ring and 3-Hole Deckplate
- Forward Only Handle Operation
- 1.8 gpm @ 60 psi

Single Handle Pull-Out Kitchen Faucet

G133-1ØCC	Polished Chrome	3	$159
G133-1ØWW	White	3	$159
G133-1ØSS	Stainless Steel	3	$185
G133-1ØYY	Tuscan Bronze	3	$214

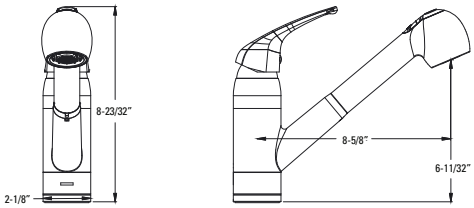

Holes: · 1 or 3-Hole 8" Installation

Features:
- Ceramic Disc Valve
- Metal Lever Handle
- Swivel Spout
- Two-Function Sprayhead: Stream and Spray
- Single Post Mounting Ring and 3-Hole Deckplate
- 38" Pull-Out Hose
- Order 941-372Ø for 1.5 gpm Aerator
- 1.8 gpm @ 60 psi

Single Control Kitchen Faucet

Single Handle Kitchen Faucet

Model	Finish	Case Qty	List Price
G134-5ØØØ	Polished Chrome	3	$124

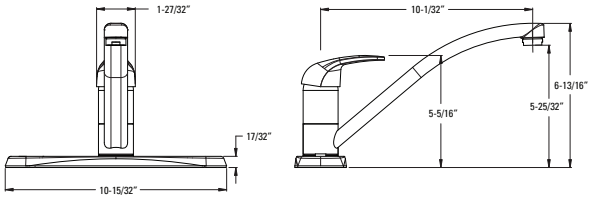

Technical Info

Holes: · 3-Hole 8" Installation

Features:
- Ceramic Disc Valve
- Metal Lever Handle
- Swivel Spout
- 1.8 gpm @ 60 psi

CEC Compliant | Cal Green Compliant | NSF Lead-Free Certified | ADA Compliant | Accudock™

	Model	Finish	Case Qty	List Price
Single Handle Kitchen Faucet with Spray	G134-7ØØØ	Polished Chrome	3	$151
	G134-7ØØS	Stainless Steel	3	$216

Technical Info

Holes: · 4-Hole 8" Installation

Features:
- Ceramic Disc Valve
- Metal Lever Handle
- Swivel Spout
- Matching Finish Sidespray
- 1.8 gpm @ 60 psi

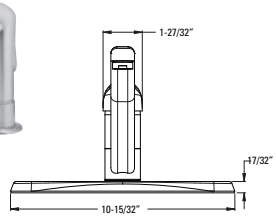

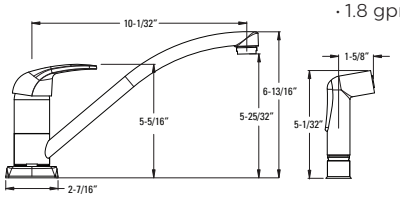

Single Handle Kitchen Faucet	G134-1444	Polished Chrome	3	$72

Holes: · 3-Hole 8" Installation

Features:
- Stainless Steel Ball Valve
- Metal Lever Handle
- Swivel Spout
- Order 941-372Ø for 1.5 gpm Aerator
- 1.8 gpm @ 60 psi

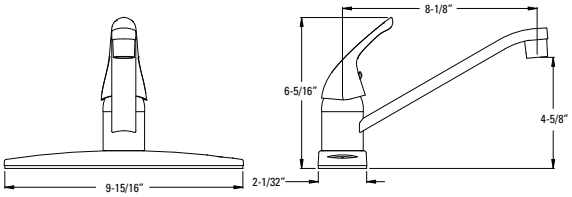

Single Handle Kitchen Faucet with Spray	G134-3444	Polished Chrome	3	$80

Holes: · 3-Hole 8" Installation

Features:
- Stainless Steel Ball Valve
- Metal Lever Handle
- Swivel Spout
- Matching Finish Sidespray
- Order 941-372Ø for 1.5 gpm Aerator
- 1.8 gpm @ 60 psi

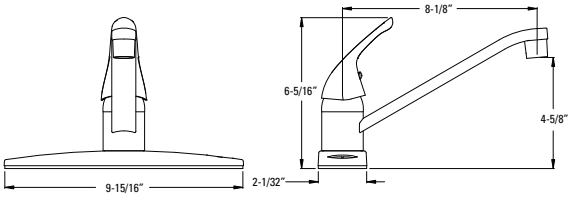

Single Handle Kitchen Faucet with Spray	G134-4444	Polished Chrome	3	$80

Holes: · 4-Hole 8" Installation

Features:
- Stainless Steel Ball Valve
- Metal Lever Handle
- Swivel Spout
- Matching Finish Sidespray
- Order 941-372Ø for 1.5 gpm Aerator
- 1.8 gpm @ 60 psi

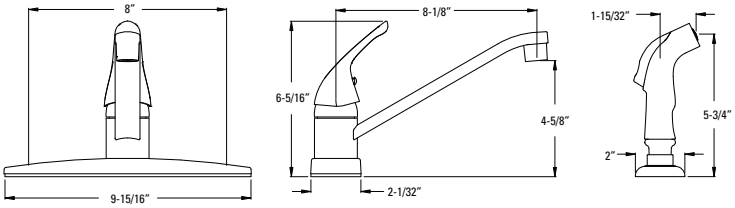

CEC Compliant | Cal Green Compliant | NSF Lead-Free Certified | ADA Compliant | Accudock™

	Model	Finish	Case Qty	List Price
Two-Handle Kitchen Faucet	G135-7ØØØ	Polished Chrome	3	$93

Technical Info

Holes: · 3-Hole 8" Installation

Features:
- Ceramic Disc Valves
- Metal Lever Handles
- Swivel Spout
- 1.8 gpm @ 60 psi

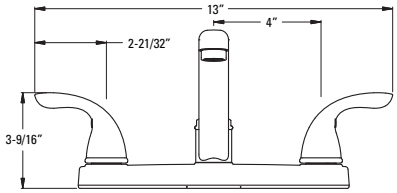

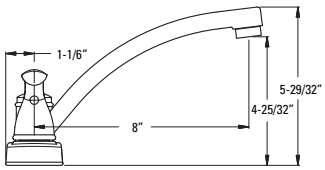

	Model	Finish	Case Qty	List Price
Two-Handle Kitchen Faucet with Spray	G135-8ØØØ	Polished Chrome	3	$108

Holes: · 4-Hole 8" Installation

Features:
- Ceramic Disc Valves
- Metal Lever Handles
- Swivel Spout
- Matching Finish Sidespray
- 1.8 gpm @ 60 psi

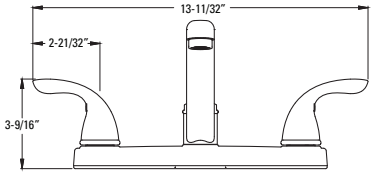

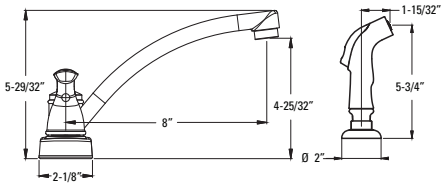

	Model	Finish	Case Qty	List Price
Two-Handle Kitchen Faucet	G135-1ØØØ	Polished Chrome	3	$60

Holes: · 3-Hole 8" Installation

Features:
- Washerless Cartridges
- Swivel Spout
- 1.8 gpm @ 60 psi

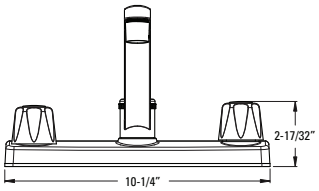

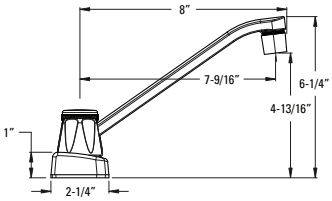

	Model	Finish	Case Qty	List Price
Two-Handle Kitchen Faucet with Spray	G135-4ØØØ	Polished Chrome	3	$72

Holes: · 4-Hole 8" Installation

Features:
- Washerless Cartridges
- Swivel Spout
- White Sidespray
- 1.8 gpm @ 60 psi

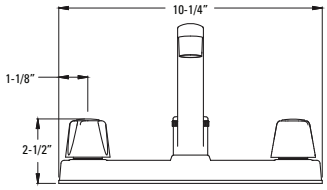

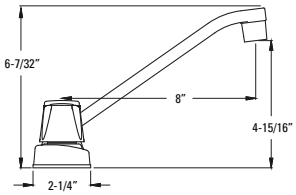

CEC Compliant · Cal Green Compliant · NSF Lead-Free Certified · ADA Compliant · Accudock™

	Model	Finish	Case Qty	List Price
Two-Handle Kitchen Faucet	G135-11ØØ	Polished Chrome	3	$60

Technical Info

Holes: · 3-Hole 8" Installation

Features:
· Washerless Cartridges
· Acrylic Handles
· Swivel Spout
· 1.8 gpm @ 60 psi

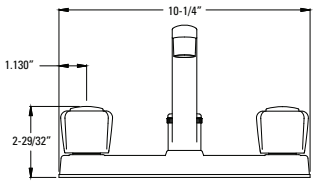

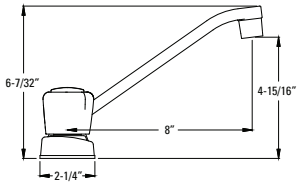

Two-Handle Kitchen Faucet with Spray	G135-41ØØ	Polished Chrome	3	$67

Holes: · 4-Hole 8" Installation

Features:
· Washerless Cartridges
· Acrylic Handles
· Swivel Spout
· White Sidespray
· 1.8 gpm @ 60 psi

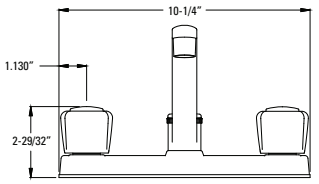

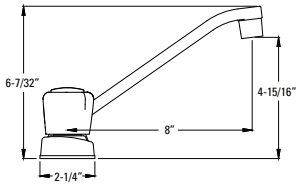

CEC Compliant
Cal Green Compliant
NSF Lead-Free Certified
ADA Compliant
Accudock™

Two-Handle Kitchen Faucet

	Model	Finish	Case Qty	List Price
Two-Handle High Arc Kitchen Faucet	G136-2ØØØ	Polished Chrome	3	$108
	G136-2ØØS	Stainless Steel	3	$129

Technical Info

Holes: · 3-Hole 8" Installation

Features:
- Ceramic Disc Valves
- Metal Lever Handles
- High Arc Swivel Spout
- 1.8 gpm @ 60 psi

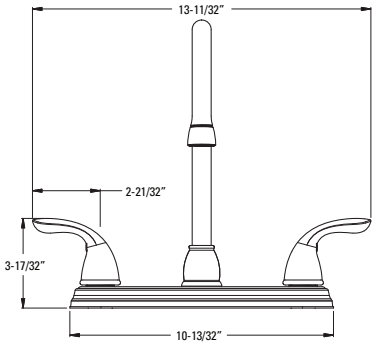

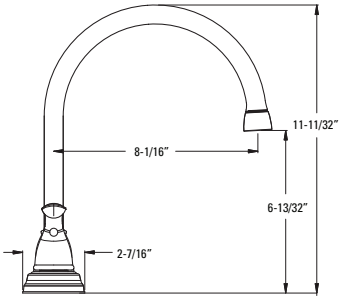

	Model	Finish	Case Qty	List Price
Two-Handle High Arc Kitchen Faucet with Spray	G136-5ØØØ	Polished Chrome	3	$113
	G136-5ØØS	Stainless Steel	3	$133

Holes: · 4-Hole 8" Installation

Features:
- Ceramic Disc Valves
- Metal Lever Handles
- High Arc Swivel Spout
- Matching Finish Sidespray
- 1.8 gpm @ 60 psi

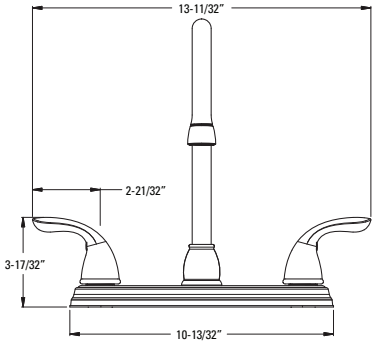

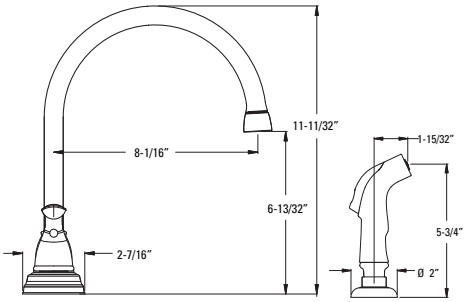

Wall Mount Kitchen Faucet

	Model	Finish	Case Qty	List Price
Wall Mount Kitchen Faucet	G127-1ØØØ	Polished Chrome	3	$104

Technical Info

Holes: · 2-Hole 6 3/4 – 9 1/8" Installation

Features:
- Compression Valves
- Metal Blade Handles
- 1.8 gpm @ 60 psi

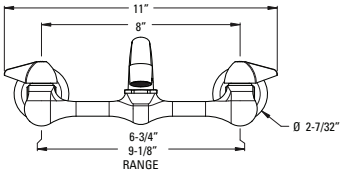

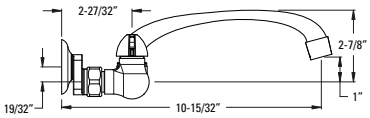

CEC Compliant | Cal Green Compliant | NSF Lead-Free Certified | ADA Compliant | Accudock™

Bar / Laundry Faucet

	Model	Finish	Case Qty	List Price
Bar/Ent. Faucet	G171-4ØØØ	Polished Chrome	3	$46

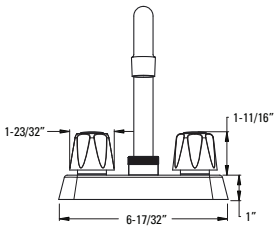

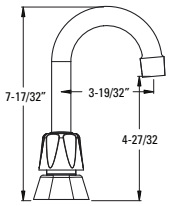

Technical Info

Holes: · 2-Hole 4" Installation

Features:
- Washerless Cartridges
- Metal Handles
- 1.8 gpm @ 60 psi

Single Control Lavatory Faucets

Pfirst Modern	Model	Finish	Case Qty	List Price
Single Control Lavatory	LG142-Ø6ØØ	Polished Chrome	3	$145
	LG142-Ø6ØK	Brushed Nickel	3	$192

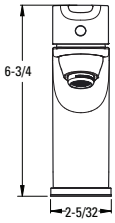

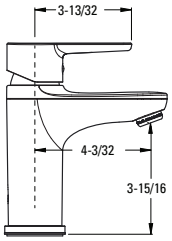

Technical Info

Holes: · 1 Installation

Features:
- Ceramic Disc Valve
- Metal Lever Handles
- High Temperature Limit Stop
- Optional 3-Hole Deck Plate. Order 961-217*
- Push & Seal Drain Included
- 941-621*& 972-Ø22* for Optional Metal Drain
- 1.2 gpm @ 60 psi

Single Control Lavatory	LG142-8ØØØ	Polished Chrome	3	$114
	LG142-8ØØK	Brushed Nickel	3	$145
	LG142-8ØØY	Tuscan Bronze	3	$175

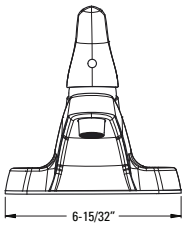

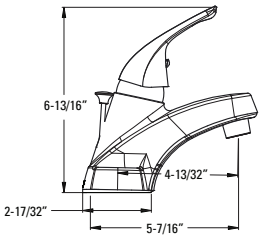

Technical Info

Holes: · 3-Hole Installation

Features:
- Stainless Steel Ball Valve
- Metal Lever Handle
- All Metal Pop-Up
- 1.2 gpm @ 60 psi

CEC Compliant | Cal Green Compliant | Meets EPA WaterSense℠ Standards | NSF Lead-Free Certified | ADA Compliant | UltraSeal™ | SecurePfit™

	Model	Finish	Case Qty	List Price
Single Control Lavatory	LG142-7ØØØ	Polished Chrome	3	$99

Technical Info

Holes: · 3-Hole 4" Installation

Features:
· Stainless Steel Ball Valve
· Metal Lever Handle
· 50/50 Pop-Up
· 1.2 gpm @ 60 psi

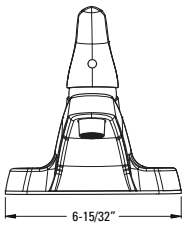

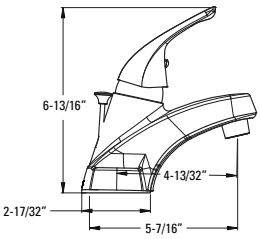

Single Control Lavatory	LG142-6ØØØ	Polished Chrome	3	$73
	LG142-6ØØK	Brushed Nickel	3	$111

Holes: · 3-Hole 4" Installation

Features:
· Stainless Steel Ball Valve
· Metal Lever Handle
· All Metal Pop-Up
· 1.2 gpm @ 60 psi

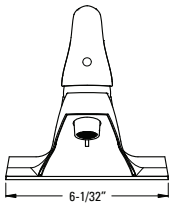

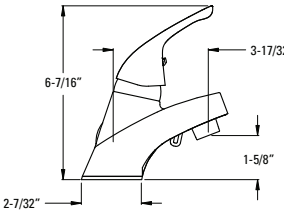

Single Control Lavatory	LG142-5ØØØ	Polished Chrome	3	$57

Holes: · 3-Hole 4" Installation

Features:
· Stainless Steel Ball Valve
· Metal Lever Handle
· Less Drain Assembly
· Cap for Pop-Up Rod Hole
· 1.2 gpm @ 60 psi

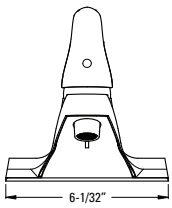

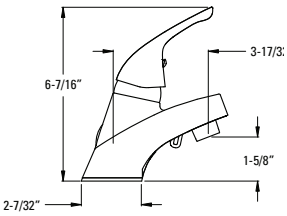

4" Centerset Lavatory	LG148-7ØØØ	Polished Chrome	3	$129
	LG148-7ØØK	Brushed Nickel	3	$151
	LG148-7ØØY	Tuscan Bronze	3	$167

Holes: · 3-Hole 4" Installation

Features:
· Ceramic Disc Valves
· Metal Lever Handles
· High Arc Fixed Spout
· All Metal Pop-Up
· 1.2 gpm @ 60 psi

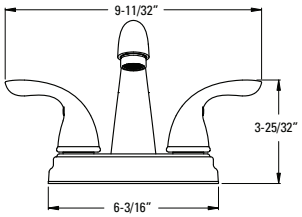

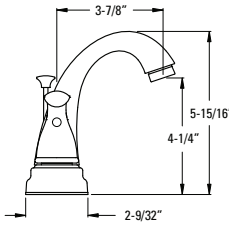

CEC Compliant · Cal Green Compliant · Meets EPA WaterSense℠ Standards · NSF Lead-Free Certified · ADA Compliant · UltraSeal™ · SecurePfit™

	Model	Finish	Case Qty	List Price
4" Centerset Lavatory	LG143-61ØØ	Polished Chrome	3	$100
	LG143-61ØK	Brushed Nickel	3	$119
	LG143-61ØY	Tuscan Bronze	3	$155

Technical Info

Holes: · 3-Hole 4" Installation

Features:
· Washerless Cartridges
· Metal Lever Handles
· All Metal Pop-Up
· 1.2 gpm @ 60 psi

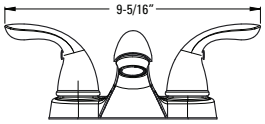

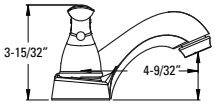

	Model	Finish	Case Qty	List Price
4" Centerset Lavatory	LG143-51ØØ	Polished Chrome	3	$85

Technical Info

Holes: · 3-Hole 4" Installation

Features:
· Washerless Cartridges
· Metal Lever Handles
· Less Drain Assembly
· Cap for Pop-Up Rod Hole
· 1.2 gpm @ 60 psi

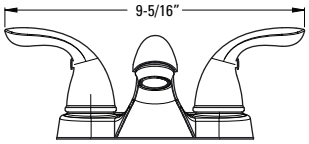

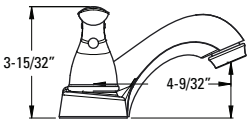

	Model	Finish	Case Qty	List Price
4" Centerset Lavatory	LG143-6ØØØ	Polished Chrome	3	$63

Holes: · 3-Hole 4" Installation

Features:
· Washerless Cartridge
· All Metal Pop-Up
· 1.2 gpm @ 60 psi

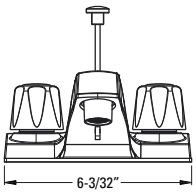

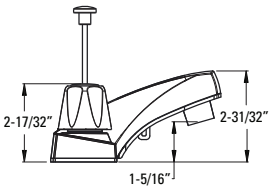

	Model	Finish	Case Qty	List Price
4" Centerset Lavatory	LG143-5ØØØ	Polished Chrome	3	$47

Holes: · 3-Hole 4" Installation

Features:
· Washerless Cartridges
· Less Drain Assembly
· Cap for Pop-Up Rod Hole
· 1.2 gpm @ 60 psi

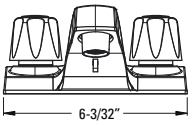

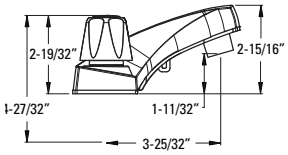

CEC Compliant · Cal Green Compliant · Meets EPA WaterSense℠ Standards · NSF Lead-Free Certified · ADA Compliant · UltraSeal™ · SecurePfit™

	Model	Finish	Case Qty	List Price
4" Centerset Lavatory	LG143-6ØØ2	Polished Chrome	3	$63

Technical Info

Holes: · 3-Hole 4" Installation

Features:
- Washerless Cartridges
- Acrylic Handles
- All Metal Pop-Up
- 1.2 gpm @ 60 psi

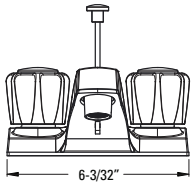

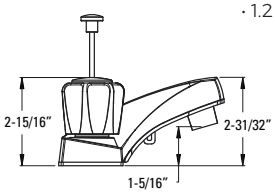

4" Centerset Lavatory	LG143-5ØØ2	Polished Chrome	3	$47

Holes: · 3-Hole 4" Installation

Features:
- Washerless Cartridges
- Acrylic Handles
- Less Drain Assembly
- Cap for Pop-Up Rod Hole
- 1.2 gpm @ 60 psi

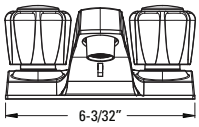

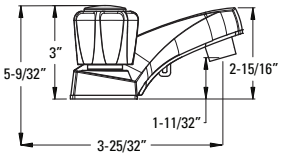

CEC Compliant · Cal Green Compliant · Meets EPA WaterSense℠ Standards · NSF Lead-Free Certified · ADA Compliant · UltraSeal™ · SecurePfit™

	Model	Finish	Case Qty	List Price
8" Widespread Lavatory	LG149-61ØØ	Polished Chrome	3	$187
	LG149-61ØK	Brushed Nickel	3	$231
	LG149-61ØY	Tuscan Bronze	3	$277

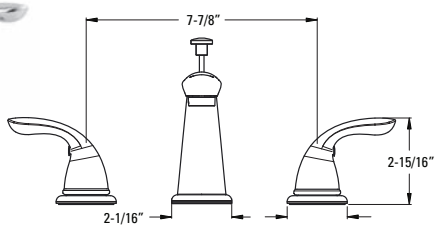

Technical Info

Holes: · 3-Hole Installation

Features:
- Ceramic Disc Valves
- Metal Lever Handles
- All Metal Pop-Up
- Quick Connect Hose Assembly
- 1.2 gpm @ 60 psi

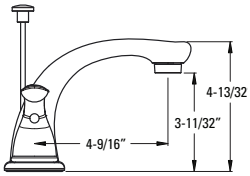

CEC Compliant | Cal Green Compliant | Meets EPA WaterSense℠ Standards | NSF Lead-Free Certified | ADA Compliant | UltraSeal™ | SecurePfit™

Roman Tub Trim

Model	Finish	Case Qty	List Price
1T6-51ØØ	Polished Chrome	3	$150
1T6-51ØK	Brushed Nickel	3	$197
1T6-51ØY	Tuscan Bronze	3	$234

Technical Info

Holes: · 3-Hole Installation

Features: · Ceramic Disc Valves
· Metal Lever Handles

Must Order ØX6-Ø5ØR or JX6-15ØR Rough In Valve Separately. See Valve Section.

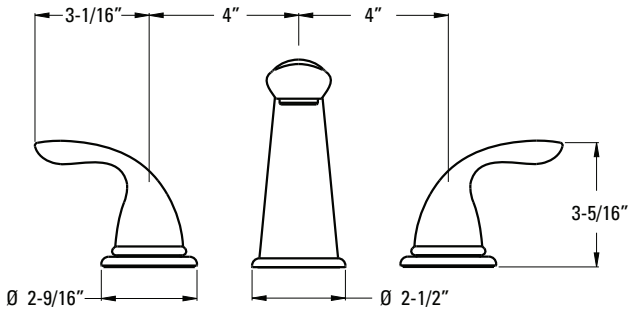

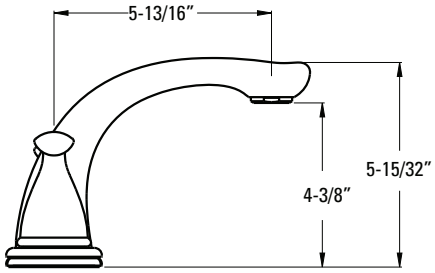

CEC Compliant · Cal Green Compliant · Meets EPA WaterSense℠ Standards · NSF Lead-Free Certified · ADA Compliant · UltraSeal™ · SecurePfit™

Pfirst Modern™
Pressure Balance Tub & Shower Trim

Model	Finish	Case Qty	List Price
R89-Ø7ØØ	Polished Chrome	3	$86
R89-Ø7ØK	Brushed Nickel	3	$115

Technical Info

Holes: · 3-Hole Installation

Features:
- Quick Trim™ Wall Flange
- Metal Lever Handle
- Hot/Cold Indicator
- 5" IP & Quick Connect Metal Diverted Tub Spout
- Must Order Showerhead Separately
- Optional 6.5" IP & Quick Connect Metal Tub Spout Order 92Ø-185*

Must Order Pressure Balance Rough in Valve Separately. See Valve Section.

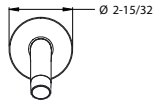

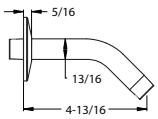

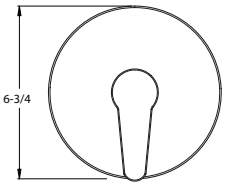

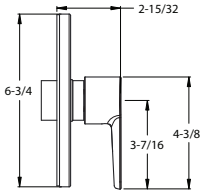

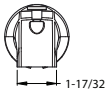

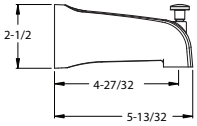

Pfirst Modern™
Pressure Balance Shower Trim

R89-Ø6ØØ	Polished Chrome	3	$60
R89-Ø6ØK	Brushed Nickel	3	$83

Holes: · 2-Hole Installation

Features:
- Quick Trim™ Wall Flange
- Metal Lever Handle
- Hot/Cold Indicator
- Must Order Showerhead Separately

Must Order Pressure Balance Rough in Valve Separately. See Valve Section.

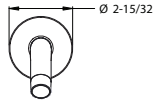

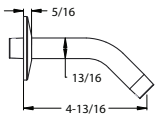

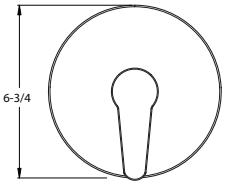

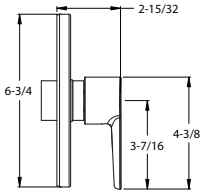

CEC Compliant · Cal Green Compliant · Meets EPA WaterSense℠ Standards · NSF Lead-Free Certified · ADA Compliant · UltraSeal™ · SecurePfit™

Pfirst Modern™
Pressure Balance Valve
Only Trim

Model	Finish	Case Qty	List Price
R89-Ø4ØØ	Polished Chrome	3	$48
R89-Ø4ØK	Brushed Nickel	3	$56

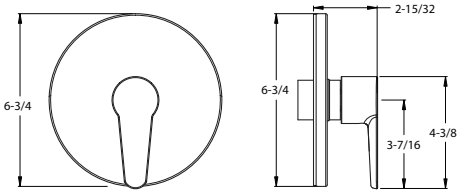

Technical Info

Features:
- Quick Trim™ Wall Flange
- Metal Lever Handle
- Hot/Cold Indicator

Must Order Pressure Balance Rough in Valve Separately. See Valve Section.

Pfirst Modern™
Job Pack Showerhead

J15-Ø6ØC	Polished Chrome	12	$18
J15-Ø6ØK	Brushed Nickel	12	$30

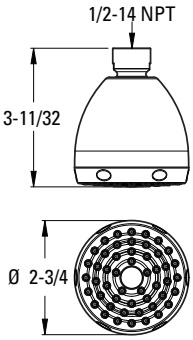

Features:
- Single Function
- JX = Job Pack Quantity Ships in Master Carton of 12
- Order 941-Ø55 for 1.5 gpm Showerhead Insert
- Showerhead 1.8 gpm @ 80 psi

Pfirst Modern™
Job Pack Showerhead

J15-Ø7ØC	Polished Chrome	12	$30
J15-Ø7ØK	Brushed Nickel	12	$43

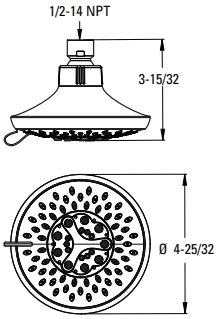

5

Pfirst Series

CEC Compliant | Cal Green Compliant | Meets EPA WaterSense℠ Standards | NSF Lead-Free Certified | ADA Compliant | UltraSeal™ | SecurePfit™

Pressure Balance Tub & Shower Trim

Model	Finish	Case Qty	List Price
LG89-Ø3ØØ	Polished Chrome	3	$52
LG89-Ø3ØK	Stainless Steel	3	$103
LG89-Ø3ØY	Tuscan Bronze	3	$162

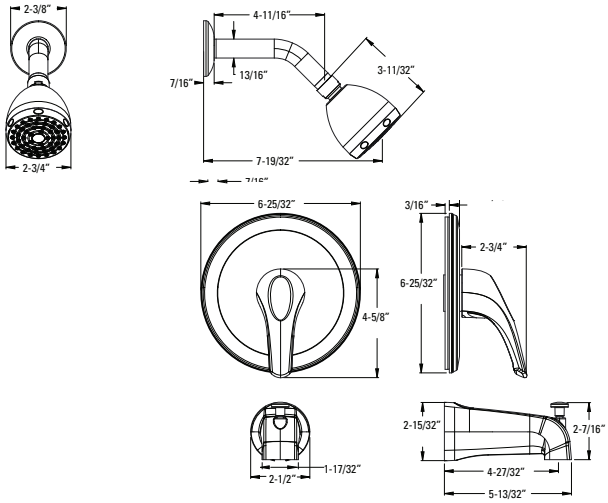

Technical Info

Holes: · 3-Hole Installation

Features:
- Quick Trim™ Wall Flange
- Metal Lever Handle
- Hot/Cold Indicator
- Bell Showerhead
- Easy To Clean Spray Nozzles
- Quick Connect Diverter Tub Spout
- Order 941-Ø55Ø for 1.5 gpm Showerhead Insert
- Showerhead 1.8 gpm @ 80 psi

Must Order Pressure Balance Rough in Valve Separately. See Valve Section.

Pressure Balance Shower Trim

LG89-Ø2ØØ	Polished Chrome	3	$44
LG89-Ø2ØK	Stainless Steel	3	$90
LG89-Ø2ØY	Tuscan Bronze	3	$128

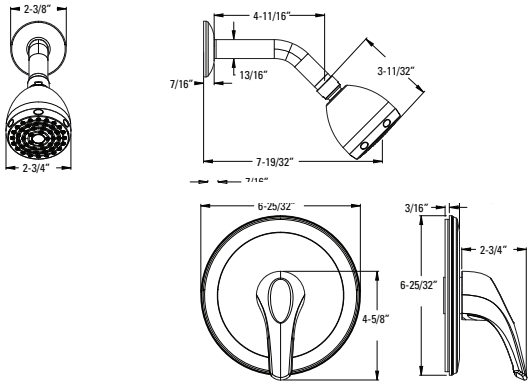

Holes: · 2-Hole Installation

Features:
- Quick Trim™ Wall Flange
- Metal Lever Handle
- Hot/Cold Indicator
- Bell Showerhead
- Easy To Clean Spray Nozzles
- Order 941-Ø55Ø for 1.5 gpm Showerhead Insert
- Showerhead 1.8 gpm @ 80 psi

Must Order Pressure Balance Rough in Valve Separately. See Valve Section.

Pressure Balance Valve Only Trim

R89-Ø1ØØ	Polished Chrome	3	$45
R89-Ø1ØK	Brushed Nickel	3	$90
R89-Ø1ØY	Tuscan Bronze	3	$132

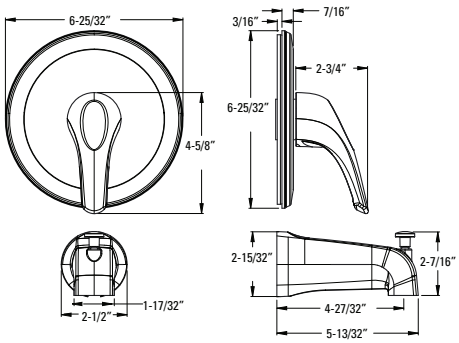

Holes: · 2-Hole Installation

Features:
- Quick Trim™ Wall Flange
- Metal Lever Handle
- Hot/Cold Indicator
- Quick Connect Metal Non-Diverting Tub Spout

Must Order Pressure Balance Rough in Valve Separately. See Valve Section.

CEC Compliant · Cal Green Compliant · Meets EPA WaterSense℠ Standards · NSF Lead-Free Certified · ADA Compliant · UltraSeal™ · SecurePfit™

24" Towel Bar

Model	Finish	Case Qty	List Price
BTB-R2CC	Polished Chrome	6	$37
BTB-R2KK	Brushed Nickel	6	$51
BTB-R2YY	Tuscan Bronze	6	$51

Technical Info

Holes: · 2-Hole

Features:
- All Metal Construction
- Standard Mounting Bracket
- Concealed Screw Installation
- Mounting Hardware Included

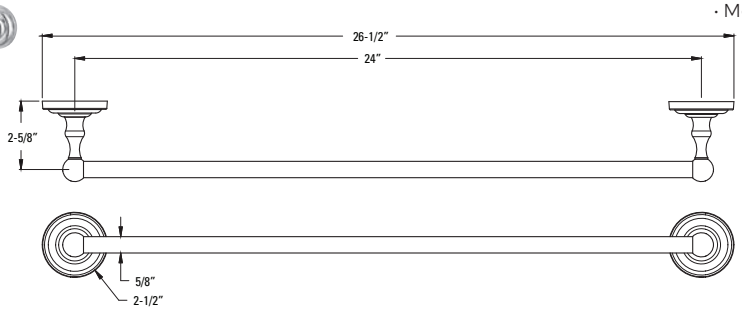

Towel Ring

Model	Finish	Case Qty	List Price
BRB-RØCC	Polished Chrome	6	$23
BRB-RØKK	Brushed Nickel	6	$30
BRB-RØYY	Tuscan Bronze	6	$30

Holes: · 1-Hole

Features:
- All Metal Construction
- Standard Mounting Bracket
- Concealed Screw Installation
- Mounting Hardware Included

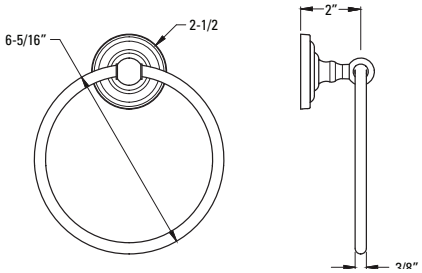

Paper Holder

Model	Finish	Case Qty	List Price
BPH-RØCC	Polished Chrome	6	$25
BPH-RØKK	Brushed Nickel	6	$32
BPH-RØYY	Tuscan Bronze	6	$32

Holes: · 2-Hole

Features:
- All Metal Construction
- Standard Mounting Bracket
- Concealed Screw Installation
- Mounting Hardware Included

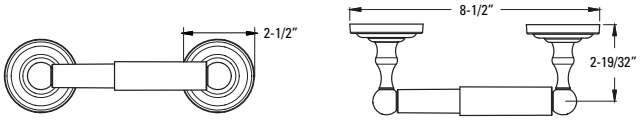

Robe Hook

Model	Finish	Case Qty	List Price
BRH-RØCC	Polished Chrome	6	$14
BRH-RØKK	Brushed Nickel	6	$15
BRH-RØYY	Tuscan Bronze	6	$15

Holes: · 1-Hole

Features:
- All Metal Construction
- Standard Mounting Bracket
- Concealed Screw Installation
- Mounting Hardware Included

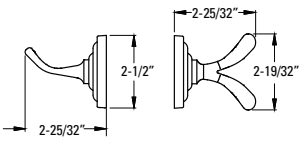

Job Pack Price Guide & Packaging

Tub & Shower · Roman Tub · Showerhead

ON-SITE INSTALLATION MADE EASY

Pfister Job Packs are designed and packaged with the new work contractor's needs in mind. Our faucets are packaged in quantities suited to multiple installations on the job site.

- Includes Roman Tub Valves, Shower Valves, Grab Bars & Showerheads.
- Our packaging is secure. It comes in a master carton with separators and unit dividers that meet the needs of the installer in new work situations.
- Best of all, you get great pricing along with the superior benefits of Pfister ceramic disc technology.
- Pfister extends the Pforever Warranty® to all Job Pack products.

CERAMIC DISC VALVING

Ceramic disc valves last eight times longer than the industry standard. They are the ultimate in durability and reliability.

Tests show that our ceramic disc valves operate flawlessly for more than 4 million cycles. That is the equivalent of 80 years of normal use, or 8 times the industry standard. Ceramic is the hardest material on earth next to diamonds, withstanding even the harshest of water conditions.

Why is this so important to you? Because the biggest reason for call-backs is leaks. Our ceramic disc valving is guaranteed to be leak-free for life. Homeowners love it because the self-lubricating ceramic discs provide easier operation.

PermaBalance™
Tub & Shower Rough Valve

Model	Description	Case Qty	List Price
JX8-31ØA	Job Pack	12	$97
JX8-34ØA	Job Pack w/Stops	12	$97

Retro-Fittable Cartridge Fits Into Existing Valve Bodies
Metal Stem

Technical Info

Features:
- Rough-In Valve and Pressure Balance Cartridge
- Ceramic Disc Valves
- 1/2" Universal Inlets to Accept 1/2" Copper, 1/2" Iron Pipe, PEX or CPVC Adapters
- Back-to-Back Compatible
- JX= Job Pack Quantity Ships in Master Carton of 12
- 34ØA= with Screwdriver Stops
- Extension Kits See Extension Kit Section
- 5.5 gpm @ 60 psi

PermaBalance™
Tub & Shower Rough PEX Ready

JX8-31ØP	Job Pack	12	$130
JX8-34ØP	Job Pack w/Stops	12	$130

Retro-Fittable Cartridge Fits Into Existing Valve Bodies
Metal Stem

This Valve Complies With Astfm F1807 and CSA B137.5 and Is to Be Used with The Sdr9 Pex Tubing Using the Crimp Ring System of Joining. It Cannot Be Used with Cold Expansion Fittings and Joining System.

Features:
- Rough-In Valve and Pressure Balance Cartridge
- Ceramic Disc Valves
- 1/2" PEX Inlets and Universal Male Threaded Outlets
- Back-to-Back Compatible
- JX= Job Pack Quantity Ships In Master Carton of 12
- 34ØP= With Screwdriver Stops
- Extension Kits See Extension Kit Section
- 5.5 gpm @ 60 psi

Job Packs

PermaBalance™
Tub & Shower Rough

Model	Description	Case Qty	List Price
JX8-11ØA	Job Pack	12	$97
JX8-14ØA	Job Pack w/Stops	12	$116

Retro-Fittable Cartridge Fits Into Existing Valve Bodies
Metal Stem

Technical Info

Features:
- Rough-In Valve and Pressure Balance Cartridge
- Ceramic Disc Valves
- 1/2" Female IP Inlets and Outlets to Accept PEX or CPVC Fittings
- Back-to-Back Compatible
- JX= Job Pack Quantity Ships In Master Carton of 12
- 14ØA= with Screwdriver Stops
- Extension Kits See Extension Kit Section
- 5.5 gpm @ 60 psi

PermaBalance™
Tub & Shower Rough
PEX Ready Valve

JX8-41ØP	Job Pack	12	$97
JX8-44ØP	Job Pack w/Stops	12	$130

1/2" Cold Expansion PEX Inlets

Retro-Fittable Cartridge Fits Into Existing Valve Bodies
Metal Stem

Features:
- Rough-In Valve and Pressure Balance Cartridge
- Ceramic Disc Valves
- 1/2" PEX Inlets and Universal Male Threaded Outlets
- Back-to-Back Compatible
- JX= Job Pack Quantity Ships in Master Carton of 12
- 44ØP= With Screwdriver Stops
- Extension Kits See Extension Kit Section
- 5.5 gpm @ 60 psi

PermaBalance™
Tub & Shower Rough
PEX Ready

JV8-31ØP	Job Pack	12	$67

Lower Profile Casting Integrated Tie-Downs

This Valve Complies With Astfm F1807 and Csa B137.5 and Is to Be Used with The Sdr9 Pex Tubing Using the Crimp Ring System of Joining. It Cannot Be Used with Cold Expansion Fittings and Joining System.

Features:
- Valve Body Only
- Accepts 974-321Ø Pressure Balance Cartridge or TX9-ØØØ1 Thermostatic Cartridge
- 1/2" PEX Inlets and Universal Male Threaded Outlets
- Test Plug
- Back-to-Back Compatible
- JX= Job Pack Quantity Ships in Master Carton of 12
- 5.5 gpm @ 60 psi

PermaBalance™
Tub & Shower Rough
PEX Ready Valve

JV8-41ØP	Job Pack	12	$64
JV8-44ØP	Job Pack w/Stops	12	$99

1/2" Cold Expansion PEX Inlets

Features:
- Valve Body Only
- Accepts 974-321Ø Pressure Balance Cartridge or TX9-ØØØ1 Thermostatic Cartridge
- 1/2" PEX Inlets and Universal Male Threaded Outlets
- Test Plug
- Back-to-Back Compatible
- JX= Job Pack Quantity Ships in Master Carton of 12
- 5.5 gpm @ 60 psi

CEC Compliant | Cal Green Compliant | Meets EPA WaterSense℠ Standards | NSF Lead-Free Certified | ADA Compliant | UltraSeal™ | SecurePfit™

Universal
Roman Tub Valve Rough

Model	Description	Case Qty	List Price
JX6-Ø5ØR	Job Pack	12	$134

Technical Info

Holes: · 3-Hole Installation

Dims: · 2 3/4" Max Deck Thickness

Features:
- Rough-In Valve Body & Cartridge
- Ceramic Disc Valves
- 10" Fixed Valve Body
- Thin and Thick Deck Mounting Hardware
- Order 974-375 1" Extension Kit if Deck Thickness Exceeds 1 21/64", Requires 1 Kit Per Handle, Stackable to Reach Desired Height up to 4 1/2"
- Order 975-015 extended spout shank for 4 1/2" of useable height
- 1/2" Sweat Inlets
- JX= Job Pack Quantity Ships in Master Carton of 12
- 15 - 18 gpm @ 60 psi

Universal
Adjustable Roman Tub Valve Rough

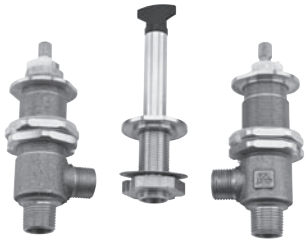

JX6-15ØR	Job Pack	12	$122

Holes: · 3-Hole Installation

Dims: · 2 3/4" Max Deck Thickness

Features:
- Rough-In Valve Body & Cartridge
- Ceramic Disc Valves
- Adjustable Installation
- Thin and Thick Deck Mount Hardware
- Order 974-375 1" Extension Kit if Deck Thickness Exceeds 1 21/64", Requires 1 Kit Per Handle, Stackable to Reach Desired Height up to 4 1/2"
- Order 975-015 extended spout shank for 4 1/2" of useable height
- 1/2" Universal IP Male Threaded Inlets and 1/2" IPS Male Threaded Outlets
- JX= Job Pack Quantity Ships in Master Carton of 12
- 15 - 18 gpm @ 60 psi

CEC Compliant · Cal Green Compliant · Meets EPA WaterSense℠ Standards · NSF Lead-Free Certified · ADA Compliant · UltraSeal™ · SecurePfit™

Safety

We know high-quality ADA compliant grab bars, handheld showers, hoses and cradles are important to your customers and it is important to us, too. Pfister's selection of high-quality ADA compliant grab bars allow you to order everything you need for your next project from one trusted source. At Pfister quality isn't an adjective. It's a commitment.

	Model	Finish	Case Qty	List Price
18" x 1 1/4" Grab Bar	BGB-118SS	Stainless Steel	12	$33

Technical Info

Holes: • 2-Hole

Features: • Concealed Screw Installation

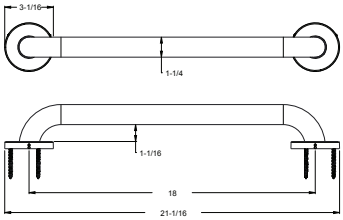

24" x 1 1/4" Grab Bar	BGB-124SS	Stainless Steel	12	$35

Holes: • 2-Hole

Features: • Concealed Screw Installation

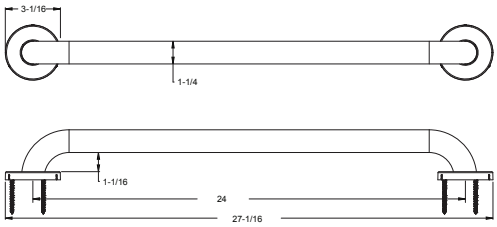

36" x 1 1/4" Grab Bar	BGB-136SS	Stainless Steel	12	$38

Holes: • 2-Hole

Features: • Concealed Screw Installation

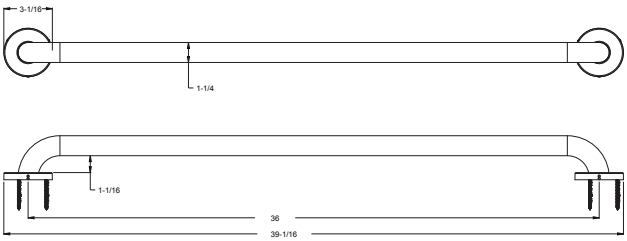

	Model	Finish	Case Qty	List Price
42" x 1 1/4" Grab Bar	BGB-142SS	Stainless Steel	12	$42

Technical Info

Holes: · 2-Hole

Features: · Concealed Screw Installation

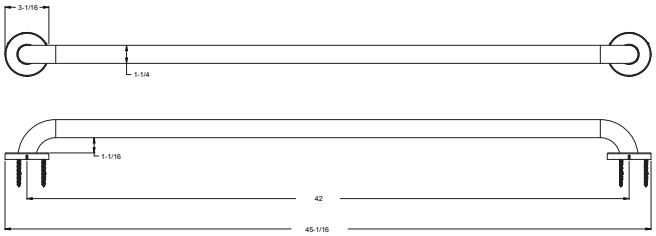

18" x 1 1/2" Grab Bar	BGB-218SS	Stainless Steel	12	$34

Holes: · 2-Hole

Features: · Concealed Screw Installation

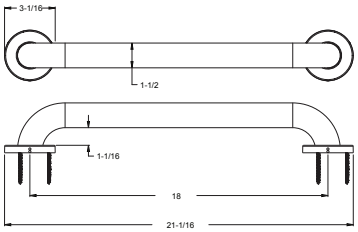

24" x 1 1/2" Grab Bar	BGB-224SS	Stainless Steel	12	$36

Holes: · 2-Hole

Features: · Concealed Screw Installation

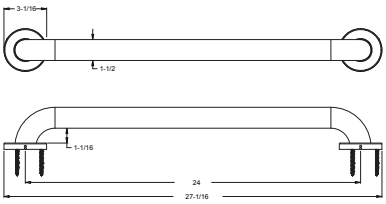

	Model	Finish	Case Qty	List Price
36" x 1 1/2" Grab Bar	BGB-236SS	Stainless Steel	12	$43

Technical Info

Holes: · 2-Hole

Features: · Concealed Screw Installation

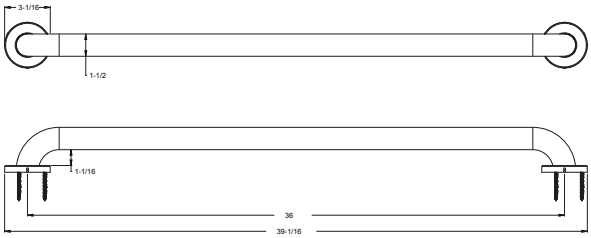

42" x 1 1/2" Grab Bar	BGB-242SS	Stainless Steel	12	$45

Holes: · 2-Hole

Features: · Concealed Screw Installation

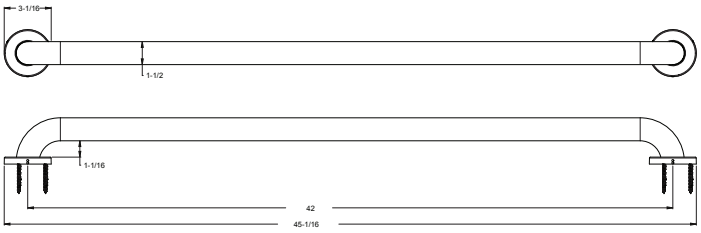

Valves

Sure, they go behind the wall. But that doesn't mean your tub and shower valves aren't critical. Selecting the right valves comes down to your plumbing setup. From single-handle and multi-handle tub and shower valves, to diverter valves for hand held showers and body sprays, and a choice between pressure-balanced and thermostatic, you'll find a range of Pfister valves to meet your needs.

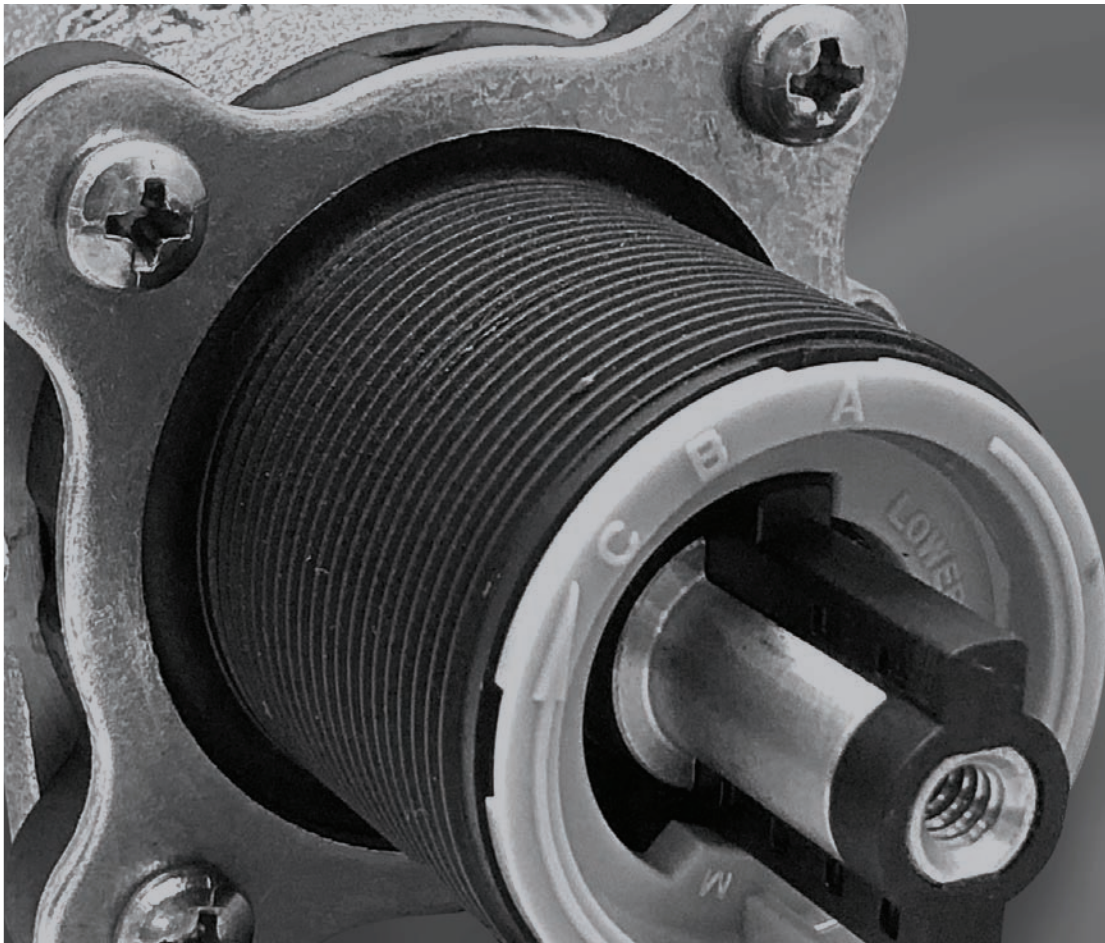

How to Order a Wall Mount Faucet

Rough-In
Choose the desired rough-in valve

+

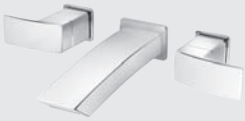

Trim
Select trim

=

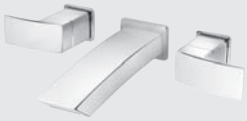

Complete Faucet

	Model	Description	Case Qty	List Price
Universal Wall Mount Rough Valve	LØW8-Ø1ØØ	N/A	10	$220

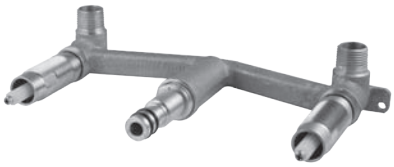

Technical Info

Holes: · 3-Hole 8" Installation

Features:
- Ceramic Disc Valves
- 11/16" Installation Depth Adjustability
- 8" Fixed Body
- 1.2 gpm @ 60 psi

Must Order Trim Separately

Tenet Wall Mount Rough Valve	LØW8-Ø2ØØ	N/A	3	$204

Holes: · 3-Hole 8" Installation

Features:
- Ceramic Disc Valves
- 3 75"-4.375" Installation Depth Adjustability
- 8" Fixed Body
- 1.2 gpm @ 60 psi
- Only compatible with Tenet Wall Mount Trim LG49-TNT2*

Must Order Trim Separately

How to Order a Pressure Balance Tub & Shower

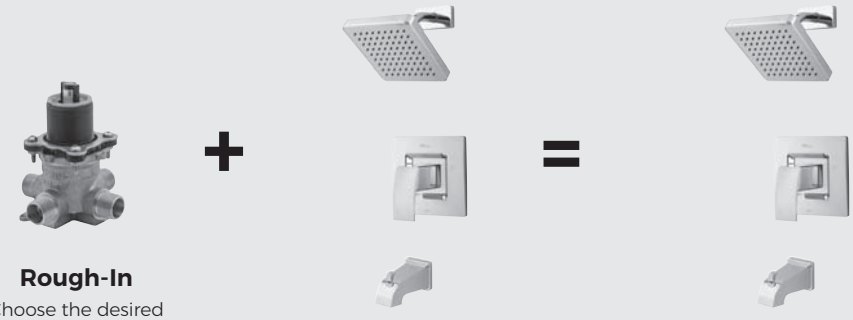

Rough-In
Choose the desired rough-in valve

Trim
Select trim

Complete Tub & Shower

PermaBalance™
Tub & Shower Rough Valve

Model	Description	Case Qty	List Price
ØX8-31ØA	No Stop	4	$113
JX8-31ØA	Job Pack	12	$97
ØX8-34ØA	With Stops	4	$141
JX8-34ØA	Job Pack w/Stops	12	$130

Retrofittable Metal Stem Cartridge Fits Into Existing Valve Bodies

Technical Info

Features:
- Rough-In Valve and Pressure Balance Cartridge
- Ceramic Disc Valves
- 1/2" Universal Inlets to Accept 1/2" Copper, 1/2" Iron Pipe, PEX or CPVC Adapters
- Back-to-Back Compatible
- JX= Job Pack Quantity Ships in Master Carton of 12
- 34ØA= with Screwdriver Stops
- Extension Kits See Page 184

PermaBalance™
Tub & Shower Rough Valve

JX8-11ØA	Job Pack	12	$97
JX8-14ØA	Job Pack w/Stops	12	$116

Retrofittable Metal Stem Cartridge Fits Into Existing Valve Bodies

Features:
- Rough-In Valve and Pressure Balance Cartridge
- Ceramic Disc Valves
- 1/2" Female IP Inlets and Outlets to Accept PEX or CPVC Fittings
- Back-to-Back Compatible
- JX= Job Pack Quantity Ships In Master Carton of 12
- 14ØA= with Screwdriver Stops
- Extension Kits See Page 184

PermaBalance™
Tub & Shower Rough PEX Ready Valve

JX8-31ØP	Job Pack	12	$97
JX8-34ØP	Job Pack w/Stops	12	$130

Retrofittable Metal Stem Cartridge Fits Into Existing Valve Bodies

This Valve Complies With Astfm F1807 and CSA B137.5 and Is to Be Used with The Sdr9 Pex Tubing Using the Crimp Ring System of Joining. It Cannot Be Used with Cold Expansion Fittings and Joining System.

Features:
- Rough-In Valve and Pressure Balance Cartridge
- Ceramic Disc Valve
- 1/2" PEX Inlets and Universal Male Threaded Outlets
- Back-to-Back Compatible
- JX= Job Pack Quantity Ships In Master Carton of 12
- 34ØP= With Screwdriver Stops
- Extension Kits See Page 184

	Model	Description	Case Qty	List Price
PermaBalance™ Tub & Shower Rough PEX Ready Valve	JX8-41ØP	Job Pack	12	$97
	JX8-44ØP	Job Pack w/Stops	12	$130

1/2" Cold Expansion PEX Inlets

Retrofittable Metal Stem Cartridge Fits Into Existing Valve Bodies

Technical Info

Features:
- Rough-In Valve and Pressure Balance Cartridge
- Ceramic Disc Valve
- 1/2" PEX Inlets and Universal Male Threaded Outlets
- Back-to-Back Compatible
- JX= Job Pack Quantity Ships in Master Carton of 12
- 44ØP= with Screwdriver Stops
- Extension Kits See Page 184

PermaBalance™ Tub & Shower Rough Valve	VB8-31ØA	No Stop	4	$61
	VB8-34ØA	With Stops	4	$94

Lower Profile Casting Integrated Tie-Downs

Features:
- Valve Body Only
- Accepts 974-321Ø Pressure Balance Cartridge or TX9-ØØØ1 Thermostatic Cartridge
- Test Plug Included
- Back-to-Back Compatible

PermaBalance™ Tub & Shower Rough PEX Ready Valve	JV8-31ØP	Job Pack	12	$67

Lower Profile Casting Integrated Tie-Downs

This Valve Complies With Astfm F1807 and Csa B137.5 and Is to Be Used with The Sdr9 Pex Tubing Using the Crimp Ring System of Joining. It Cannot Be Used with Cold Expansion Fittings and Joining System.

Features:
- Valve Body Only
- Accepts 974-321Ø Pressure Balance Cartridge or TX9-ØØØ1 Thermostatic Cartridge
- 1/2" PEX Inlets and Universal Male Threaded Outlets
- Test Plug Included
- Back-to-Back Compatible
- JX= Job Pack Quantity Ships in Master Carton of 12

PermaBalance™ Tub & Shower Rough PEX Ready Valve	JV8-41ØP	Job Pack	12	$64
	JV8-44ØP	Job Pack w/Stops	12	$99

1/2" Cold Expansion PEX Inlets

Features:
- Valve Body Only
- Accepts 974-321Ø Pressure Balance Cartridge or TX9-ØØØ1 Thermostatic Cartridge
- 1/2" PEX Inlets and Universal Male Threaded Outlets
- Test Plug Included
- Back-to-Back Compatible
- JX= Job Pack Quantity Ships in Master Carton of 12

PermaBalance™ Pressure Balance Cartridge	974-321Ø	No Stop	1	$37.34

Features:
- Pressure Balance Cartridge
- Ceramic Disc Valve
- Can Be Used with VB8 & JV8 Valve Bodies
- Metal Stem
- Extension Kits See Page 184
- Includes adapter for legacy valve

How to Order a 1/2” Thermostatic Shower System

Rough-In
Choose the desired rough-in valve

+

Trim
Select trim

=

1/2" Thermostatic Shower Trim

1/2” Thermostatic Tub & Shower Rough Valve

Model	Description	Case Qty	List Price
TX9-31ØA	N/A	4	$179
TX9-34ØA	With Stops	4	$221

Technical Info

Features:
- Ceramic Disc Valve
- 1/2” Thermostatic Rough In Valve and Cartridge
- PEX or CPVC Adapters
- Back-to-Back Compatible
- 340A= with Screwdriver Stops
- 7 gpm @ 60 psi

Thermostatic Cartridge

TX9-ØØØ1	Cartridge	15	$114

Features:
- Ceramic Disc Valve
- 1/2” Thermostatic Cartridge Only
- Purchase VB8 or JV8 Valve Body Only Separately

How to Order a Diverter

Rough-In
Choose the desired rough-in valve

+

Trim
Select trim

=

Complete Diverter

	Model	Description	Case Qty	List Price
2-Way Diverter Valve	Ø15-2WDX	Diverter Valve	4	$152

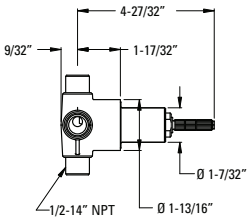

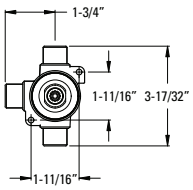

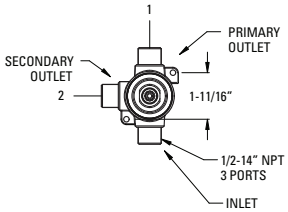

Technical Info

Features:
- 2-Port, 2-Way Diverter
- 1/2" Male IP Common Threads
- No shared Functionality
- Install Depth 2 1/8-3" to Centerline Connection
- Functionality - 1 or 2 Only
- Extension Kit 97Ø-Ø89Ø

3-Way Diverter Valve	Ø15-4WDX	Diverter Valve	4	$156

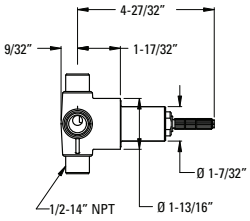

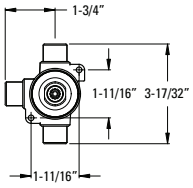

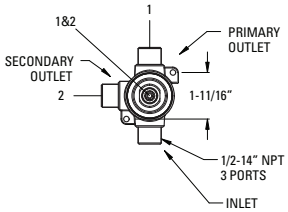

Features:
- 2-Port, 3-Way Diverter
- 1/2" Male IP Connection
- Shared Functionality to Run 2 Items Simultaneously
- Supports Showerhead and/or Hand Shower
- Install Depth 2 1/8-3" to Centerline Connection
- Functionality - 1, 2, or 1 and 2
- Extension Kit 97Ø-Ø89Ø

CEC Compliant | Cal Green Compliant | Meets EPA WaterSense℠ Standards | NSF Lead-Free Certified | ADA Compliant | UltraSeal™ | SecurePfit™

How to Order a Two Hole Free-Standing Tub Filler

Rough-In
Choose the desired rough-in valve

+

Trim
Select trim

=

Complete Tub Filler

	Model	Description	Case Qty	List Price
Tisbury Free-Standing Tub Filler Rough Valve	ØX6-34ØR	Rough-in Kit	3	$231

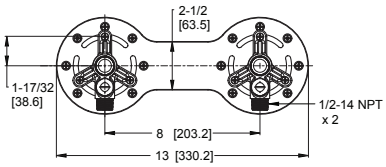

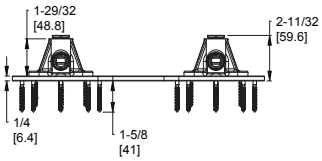

Technical Info

Holes:
- 2-Hole Installation

Features:
- Rough In Valve Body
- 8" Valve Body
- Included Steel Bracket For Installation Hardware
- 3/4" Sweat Inlets
- 3/4" 14NPT Male Thread
- 10 gpm @ 60 psi
- Optional Concrete Installation Rough-In Kit - Order 931-132
- Integral Stops Included
- Not To Be Used with LG6-1TF* Traditional Tub Filler

Tisbury Double Hole Concrete Rough-In Kit	931-132Ø	Rough-in Kit	3	$219.44

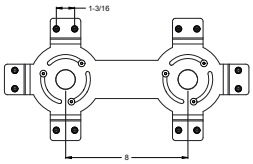

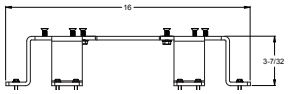

Holes:
- 2-Hole Installation

Features:
- Rough In Kit to Be Used with Tisbury Valve ØX6-34ØR
- Intended for Deep Concrete Application
- Stainless Steel
- Concrete Mounting Hardware Not Included

CEC Compliant | Cal Green Compliant | Meets EPA WaterSense℠ Standards | NSF Lead-Free Certified | ADA Compliant | UltraSeal™ | SecurePfit™

How to Order a Single Hole Free-Standing Tub Filler

Rough-In
Choose the desired rough-in valve

+

Trim
Select trim

=

Complete Tub Filler

	Model	Description	Case Qty	List Price
Single Hole Free-Standing Tub Filler Valve with Stops	ØX6-27ØR	Rough Valve	1	$299

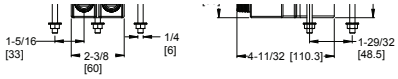

Technical Info

Features:
- Rough-In Valve Body for Installation Prior to Descriptioned Flooring
- To Be Used with Modern Single Hole Free-Standing Tub Filler with Hand Shower LG6-1MF*
- 6 gpm @ 45 psi
- 1/2" NPT Connection
- With Screwdriver Stops
- To Be Used with Modern, Rhen or Tenet Tub Filler

Single Hole Concrete Rough In Kit	931-145Ø	Rough-In Kit	3	$201.76

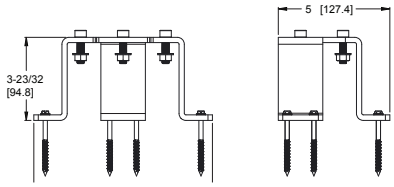

Holes:
- 1 Hole Installation

Features:
- Rough In Kit to Be Used with Single Hole Free Standing Tub Valve with or without stops
- Intended for Deep Concrete Application
- Stainless Steel
- Concrete Mounting Hardware Not Included
- To Be Used with Modern, Rhen or Tenet Tub Filler

How to Order a Roman Tub Faucet

Rough-In
Choose the desired rough-in valve

+

Trim
Select trim

=

Complete Tub Filler

Universal
Roman Tub Valve Rough

Model	Description	Case Qty	List Price
ØX6-Ø5ØR	Single Pack	3	$149
JX6-Ø5ØR	Job Pack	12	$134

Technical Info

Holes: · 3-Hole 10" Installation

Dims: · 1 3/8" Max Deck Thickness

Features:
- Rough-In Valve Body & Cartridge
- Ceramic Disc Valve
- 10" Fixed Valve Body
- Thin and Thick Deck Mounting Hardware
- Order 974-375 1" Extension Kit if Deck Thickness Exceeds 1 3/8", Requires 1 Kit Per Handle, Stackable to Reach Desired Height up to 4 1/2"
- Order 975-015 extended spout shank for 4 1/2" of useable height
- 1/2" Sweat Inlets
- JX= Job Pack Quantity Ships in Master Carton of 12
- 15 - 18 gpm @ 60 psi

Universal
Adjustable Roman Tub Valve Rough

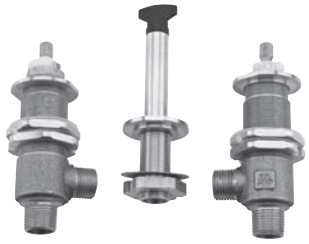

Model	Description	Case Qty	List Price
ØX6-15ØR	Single Pack	3	$133
JX6-15ØR	Job Pack	12	$122

Holes: · 3-Hole Installation

Dims: · 1 3/8" Max Deck Thickness

Features:
- Rough-In Valve Body & Cartridge
- Ceramic Disc Valve
- Adjustable Installation
- Thin and Thick Deck Mounting Hardware
- Order 974-375 1" Extension Kit if Deck Thickness Exceeds 1 3/8", Requires 1 Kit Per Handle, Stackable to Reach Desired Height up to 4 1/2"
- Order 975-015 extended spout shank for 4 1/2" of useable height
- 1/2" Universal IP Male Threaded Inlets and 1/2" IPS Male Threaded Outlets
- JX= Job Pack Quantity Ships in Master Carton of 12
- 15 - 18 gpm @ 60 psi

Universal
Adjustable Roman Tub Valve and Hand Shower Rough

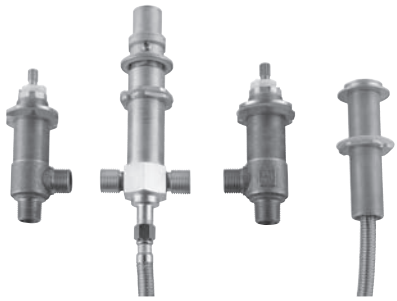

Model	Description	Case Qty	List Price
ØX6-44ØR	4-Hole Valve	3	$302

Holes: · 4-Hole 4 1/2–28" Installation

Dims: · 1 3/8" Max Deck Thickness

Features:
- Rough-In Valve Body & Cartridge
- Ceramic Disc Valve
- Adjustable Installation
- Thin and Thick Deck Mounting Hardware
- Order 974-375 1" Extension Kit if Deck Thickness Exceeds 1 3/8", Requires 1 Kit Per Handle, Stackable to Reach Desired Height up to 4 1/2"
- 1/2" Universal Male IP Threaded Inlets and 1/2" IPS Male Threaded Outlets
- 13 gpm @ 60 psi

Three-Handle Tub & Shower

	Model	Description	Case Qty	List Price
Three-Handle Tub & Shower Rough	Ø1-31XA	Rough Valve	4	$99

Technical Info

Holes: · 3-Hole 8" Installation

Features:
- Complete Valve
- 1/2" Union Inlets and 1/2" IP Outlets
- Union Nuts Included
- Ceramic Disc Cartridges

Valves

Two-Handle Tub & Shower

	Model	Description	Case Qty	List Price
Two-Handle Shower Rough	Ø7-31XA	Rough Valve	4	$80

Technical Info

Holes: · 2-Hole 8" Installation

Features:
- Complete Valve
- 1/2" Union Inlets and 1/2" IP Outlets
- Ceramic Disc Valves
- Union Nuts Included

CEC Compliant · Cal Green Compliant · Meets EPA WaterSense℠ Standards · NSF Lead-Free Certified · ADA Compliant · UltraSeal™ · SecurePfit™

Pfister® Lifetime Mechanical & Pfinish Limited Warranty

Covers Pfinish & Pfunction for as Long as You Own Your Home
Five-Year Limited Warranty on Electrical Components
One-Year Limited Warranty on GE® Filter Components (Excluding GE Filter Cartridges)

Pfister provides the following warranties for its products. Proof of purchase may be required in order to obtain any of the benefits set forth below. Commercial applications limit the duration of the warranties provided below.

Limited Warranties: Pfister warrants that for as long as the original purchaser owns the home in which the Pfister product (the "product" excluding the electronic sensor, control box, power unit, GE filter manifold and GE filter cartridges) is originally installed, the product will be free of all defects in material and workmanship that would impair the intended and proper use of the Product. If the product is installed in a commercial application, the above mechanical warranty shall be limited for a period of ten (10) years from the date of purchase of the product.

For the electrical components including the electronic sensor, control box and power unit (battery pack or AC adapter), Pfister provides a five-year limited warranty to the original residential user of the product against defects in material and workmanship, as long as the original user occupies the premises in which the product was originally installed.

Pfister provides a one-year limited warranty for the GE filter manifold and a one-month limited warranty for the GE filter cartridges to the original residential user of the product against defects in material and workmanship, as long as the original user occupies the premises in which the product was originally installed.

Pfister warrants against deterioration of the Product's finish for as long as the original purchaser owns the home in which the Product is originally installed. If the Product is installed in a commercial application, the above finish warranty for Products shall be limited to a period of ten (10) years from the date of purchase.

Exclusive Remedy: In the event of any defect in the product that breaches the foregoing warranties, Pfister, solely at its option, will repair or replace the defective part of the product. Repair or replacement of the product is the exclusive remedy. For any remedy under this warranty, Pfister is to be notified describing the problem. In order to notify Pfister and receive assistance or service under this warranty, the original purchaser may: (1) call 1-800-Pfaucet (1-800-732- 8238) for a consumer service representative who can assist you, or (2) write consumer service department c/o Pfister Inc., 19701 DaVinci, Lake Forest, CA 92610, and include a description of the problem, model number, your name, address, phone number and approximate date of purchase, or (3) email Pfister's customer service department by going to www.pfisterfaucets.com, or (4) notify the location or distributor from which the product was purchased. In any case, you may be required to return the product to Pfister for inspection and proof of purchase may be required.

Limitations and Exclusions: Pfister WILL NOT BE LIABLE FOR ANY OTHER DAMAGES OR LOSSES, INCLUDING, BUT NOT LIMITED TO, INCIDENTAL AND/OR CONSEQUENTIAL DAMAGES, REGARDLESS OF THE LEGAL THEORY ASSERTED, INCLUDING ANY CLAIM OR BREACH OF WARRANTY HEREUNDER OR ANY OTHER CAUSE, AND WHETHER ARISING IN CONTRACT OR IN TORT (including negligence and strict liability).

Pfister has the right to discontinue or modify any product at any time. Some states do not allow limitations or exclusions of incidental or consequential damages, so the above limitations or exclusions may not apply to you. This warranty gives you specific legal rights, and you may also have other rights which vary from state to state.

The above warranties do not cover damage resulting from improper maintenance, repair, cleaning or installation, misuse, abuse, alterations, accidents or acts of God.

Copyright ©2019 Pfister, Inc.

In the US:
www.pfisterfaucetspro.com
1-800-PFAUCET (732-8238)
Pfister Consumer Service
19701 DaVinci
Lake Forest, CA 9261Ø

In Canada:
www.Pfisterfaucets.ca
1-800-340-7608
Spectrum Brands Canada, Inc
101-255 Longside Dr, Mississauga,
Ontario, Canada L5W 0G7

Index

Pfister Terms and Conditions

THE FOLLOWING TERMS AND CONDITIONS ARE DEEMED TO BE INCORPORATED BY REFERENCE IN ANY ORDER FOR THE SALE OF PFISTER PRODUCTS EFFECTIVE 3/1/13

PRICES

All prices are subject to change without notice and are not guaranteed. All taxes, duties or other charges are the responsibility of the Purchaser.

CHANGE OR CANCELLATIONS

Beyond 5 working days of our acknowledgement date no changes can be made. Additions to an order will be handled as a separate order and must meet applicable minimum order requirements.

Order cancellation on regular stock items only, or any portion thereof is allowed only upon prior written consent from Pfister, and the payment of cancellation charges deemed appropriate.

MINIMUM ANNUAL SALES VOLUME

Pfister reserves the right to discontinue direct sales to any customer who does not meet the minimum annual sales volume requirement. The current annual requirement is $25,ØØØ.

Your annual purchases are determined by accepted, non-cancelled, and shipped orders received during each calendar year. This requirement is necessary because the administration, sales, and service costs to keep an account open may exceed any profit which might be realized below the level of this minimum.

Pfister reserves the right to change any or all minimum annual sales volume requirements at any time.

Any customer who does not meet the annual sales volume requirements may continue to purchase Pfister products through a Pfister distributor.

ORDERS AND ACCEPTANCE

Pfister reserves the right to refuse to accept any order, and no purchase order or indication of acceptance shall create a contract or otherwise be binding upon Pfister unless and until the same is accepted in writing at the Pfister offices located in Lake Forest, California. In the event Pfister accepts an order from Purchaser, it is expressly understood and agreed that the terms and conditions herein set forth shall prevail, notwithstanding the fact that the same may conflict with or vary from the terms and conditions set forth on any purchase order or other form which Purchaser may use to place such order, and the placing of such order by Purchaser shall be deemed to note Purchaser's assent to the foregoing.

TERMS

2% 45 days, net 46 days. Pfister reserves the right to alter credit terms up to and including cash-in-advance. Terms are F.O.B. Pfister distribution centers.

FREIGHT ALLOWANCE

For net minimum order of $1ØØØ or more, F.O.B. Pfister distribution centers with full freight allowed, as agreed in writing, or prepaid on shipments within the continental United States.

PROMISES OF SHIPMENT

Pfister does not guarantee shipping dates notwithstanding anything contained herein to the contrary Pfister will not be responsible for any consequential, special or indirect damages of any nature, or any damages that include loss of profits suffered by Purchaser because of late shipping or delivery. Pfister is not responsible for delays due to reasons beyond its reasonable control such as fire, earthquake, strikes, material shortages, government regulations, etc.

LOSS OR DAMAGE IN TRANSIT

All products are sold F.O.B. Pfister distribution centers, with risk of loss passing to Purchaser at that point Purchaser is responsible for arranging and paying for all insurance against risk of loss of or damage to the products after Pfister delivers the products into the possession of the carrier.

RETURNED GOODS

No products may be returned without our prior written authorization. If a product return is authorized, our representative will provide you with a Return Goods Authorization form (RGA) for the returnable products. The RGA form must accompany the shipment of the returned products to us.

If products were defective or were shipped in error a credit at the invoice price will be issued or replacement products will be shipped only after a thorough inspection of the returned products has been made by our representative and such inspection confirms that the products were defective or shipped in error. Please return defective products in their original packaging.

We have no obligation to agree to the return of non-defective products properly shipped. If, in our discretion, we agree to the return of non-defective, properly shipped products: (a) you will be issued a credit based on the price in effect when the products are returned or at the invoice price, whichever is lower, less the cost of return freight; (b) a 25% restocking charge will apply; and (c) returned products must be in their original package (master carton).

PRODUCT MODIFICATION

The right is reserved to deliver modified products in fulfillment of any accepted order unless Purchaser indicates otherwise in writing, placed conspicuously on the face of his/her purchase order.

INSPECTION

Purchaser shall, at its sole expense, submit all products shipped to a careful inspection upon arrival at the delivery point. All claims for damages, defects, errors, shortages or other failure of the products to conform to this agreement or their catalog description shall be delivered to Pfister in writing within ten (1Ø) days after such arrival. Failure to make any such claim within said period shall constitute acceptance of all products so delivered as conforming to the terms, conditions and specifications hereof, and in no event may such acceptance be thereafter revoked by Purchaser. Any claims by Purchaser shall be subject to inspection by Pfister or its authorized agent, to whom Purchaser shall make available access to such products and all relevant information relating to the claim. In the event Purchaser notifies Pfister of a claim within the above period and Pfister determines the claim to be valid, Purchaser's sole remedy shall be to have Pfister replace the defective or missing products within a reasonable time or authorize Purchaser to return the defective products to Pfister for credit or give Purchaser a credit for the missing products.

TAXES

All prices are exclusive of, and may be increased by the amount of, any and all applicable excise, sales, use, manufacturer's, value added and other taxes, levies, or imposts of a governmental nature, whether federal, state or local.

COLLECTION CHARGES

In the event it becomes necessary to incur any expense for collection of any overdue account, reasonable collection charges, including reasonable attorneys' fees, will be added to the balance due and Purchaser shall pay any said charges.

MODIFICATION

These terms and conditions express the entire understanding of the parties here to with respect to the subject matter here of . No variation hereof and no agreement modifying or supplementing the terms hereof shall be valid unless in writing and signed by an authorized officer of Purchaser and Pfister.

SECURITY INTEREST

Purchaser undertakes to execute such further documentation, including but not limited to financing statements, as may be required by Pfister to grant or perfect such security interest. In the event of default, Pfister will have rights provided a secured party under the Uniform Commercial Code and Pfister is hereby authorized to file with any governmental authority or agency any documentation required to perfect such security interest.

NON-WAIVER

Any failure on the part of Pfister to insist upon the strict performance of any term or condition set forth herein shall not be deemed a waiver of any Pfister rights or remedies hereunder, nor of its right to insist upon the strict performance of the same or any other term hereof in the future. No waiver of any term or condition hereunder shall be valid unless in writing and signed by an authorized officer of Pfister.

EXPORT SALES

The above terms and conditions do not apply to original equipment manufacturers or export sales or purchases made in the United States of America for export purposes. Please contact the international group for further details.

SPECIAL FINISHES

Regular use of a soft cloth rinsed in warm, soapy water will keep a Pfister finish looking clean and new. The use of polish, detergents, abrasive cleaners, organic solvents or acid to clean, shine or polish such finishes will nullify the Pfister warranty as to such finishes.

PFISTER WARRANTY STATEMENT

The Product Warranty, attached hereto, is incorporated herein by reference.

DEFAULT

If Purchaser is in default under any order or contract with Pfister or any of its affiliated divisions or companies, or if Pfister at any time shall not be satisfied with Purchaser's financial conditions or responsibility, Pfister shall have the right, without prejudice to any other legal remedy, of suspending deliveries until such default or condition is remedied.

ASSIGNMENT

Purchaser shall not assign its orders nor any of its rights or obligations thereunder without Pfister's prior written consent.

APPLICABLE LAW

These Terms and Conditions and any subsequent sales agreements between Pfister and Purchaser shall be construed in accordance with the laws of the State of Delaware.

DISCOVER THE PFISTER CATALOG APP

QUICK ACCESS TO ALL SPECS AND PRICING USING THE PFISTER APP

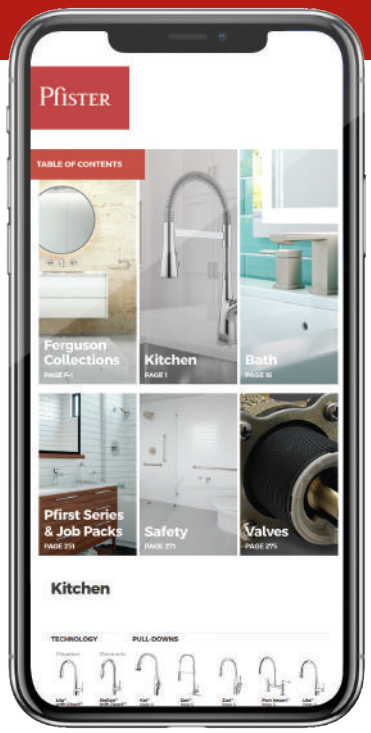

FEATURED HIGHLIGHTS

- Access Price Guide without downloading the catalog
- Seamless content sharing
- Quickly locate content using links in the table of contents
- Screenshot and share information without leaving the app via email or social media
- Bookmark pages for future references
- Select page range to export as PDF

Pfister

Available on the App Store

ANDROID APP ON Google Play

Pfister

pfisterfaucetspro.com
19701 DaVinci | Lake Forest, CA 92610
1-800-pfaucet 1-800-732-8238

© 2020 Spectrum Brands, Inc.
Pfister is a trademark of Spectrum Brands, Inc.
1/20 FEI-303679