Pfister

Canadian Price Guide

2026

TABLE OF CONTENTS

Kitchen
PAGE K-1

Bath
PAGE B-1

Accessoires
PAGE A-1

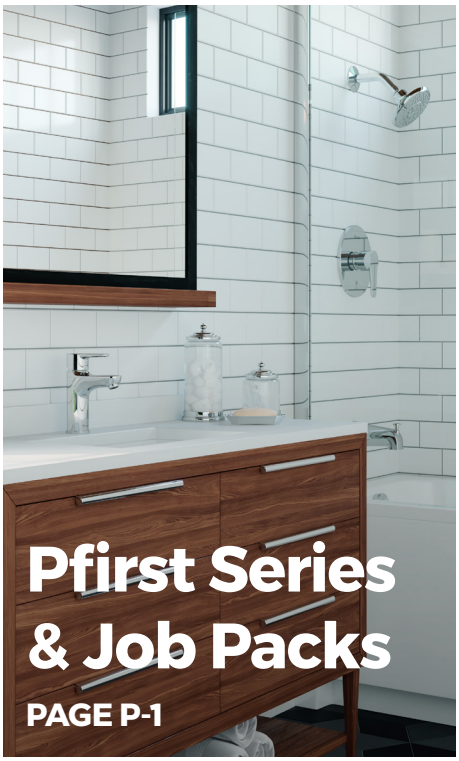

Pfirst Series & Job Packs
PAGE P-1

Valves
PAGE V-1

Retail Products
PAGE R-1

Kitchen

CULINARY

Bruton™
Page K-8

PULL-DOWNS

Asari™
Page K-2

Brislin™
Page K-2

Frontera™
Page K-3

Montay™
Page K-3

Pfirst Modern™
Page K-4

Norden™
Page K-4

Tenet™
Page K-5

Port Haven™
Page K-6

Stellen™
Page K-6

PULL-OUTS

Pfirst Series™
Page K-9

Pfirst Modern™
Page K-9

SINGLE CONTROL

Pfirst Series™
Page P-4

TOUCHLESS

Stellen™
Page K-7

TWO HANDLE

Pfirst Series™
Page P-5

BAR/PREP

Montay™
Page K-10

Port Haven™
Page K-11

Stellen™
Page K-11

Tenet™
Page K-12

BRIDGE

Port Haven™
Page K-10

POT FILLERS

Lita™
Page K-13

Port Haven™
Page K-13

SOAP DISPENSERS

Modern
Page K-14

Pfister
Page K-14

Pfister
Page K-14

Bath

Brislin™
Page B-23

Contempra®
Page B-27

Deckard™
Page B-40

Kenzo™
Page B-52

Rhen™
Page B-62

Tenet™
Page B-74

Tisbury™
Page B-86

Weller™
Page B-96

Pfirst Modern™
Page P-6

Pfirst Series™
Page P-7

We are Pfister.

For more than a century, families have been welcoming Pfister into their homes. We have become their partners through and through. We are willing to serve. Happy to help.

Never will you be hung out to dry. Never will your budget keep you from finding the style you'll love. Never will we stop searching for ways to improve your everyday experience.

We're faucet people. Real, humble, and hard-working. We know what you want out of a faucet, because we know what we'd want out of a faucet.

We put our hearts into everything we do, creating thoughtfully designed faucets and fixtures that fit perfectly into your life – because we believe everyone deserves to fill their home with style and quality no matter what their budget.

Pfister Pfinish Options

Finish	Faucet Finish Code	Parts Finish Code
Polished Chrome	C	A
Stainless Steel	S	S
Spot Defense Stainless	GS	GS
Brushed Nickel	K	J
Polished Nickel	D	D
Tuscan Bronze	Y	Y
Spot Defense Matte Black	SDB	SDB
Matte Black	B	B

PUSH&SEAL™

DRAIN INNOVATION

Push & Seal is an innovative drain assembly that is easy to install and even easier to use. No tools are required, and it installs in half the time of a standard pop-up drain. Press to seal and again to open. It really is that easy.

MagnePfit™

Pfister's MagnePfit magnetic docking features powerful magnets that keep your spray head firmly secured. The magnets work in conjunction with the heavy weight located on the hose to provide quick retraction while the magnets work to keep your spray head secured and looking seamless.

Auto-Align™

Manually aligning your spray head after each use can be a real pain. Auto-Align simplifies that process for you by removing the need for manual alignment and positioning. Threaded grooves are subtly located at the base of the spray head and work with corresponding grooves inside the spout to re-orient the spray head for perfect positioning.

Ultra Seal™

Pfister's UltraSeal cartridge is a premium upgrade to your showroom preferred faucet offering you lifelong protection against leaks. Pfister ensures the strongest connection point to the handle with larger ceramic discs and an all-brass ¼-turn cartridge technology. UltraSeal cartridges can be retrofitted into most existing widespread faucets.

Accudock™

AccuDock is Pfister's advanced sprayhead docking technology which ensures a secure, tight connection of the spray head to the faucet spout every time. The AccuDock technology guarantees the spray head will stay securely in place after every use.

Icon Legend

Core Offering

All kitchen and lavatory products with a star beside the model number are part of Pfister's Core Offerings list in Canada.

Meets EPA WaterSense℠ Standards

All items with the WaterSense℠ logo to the left of the model numbers meet or exceed the certification criteria of the EPA's WaterSense Program.

NSF Lead-Free Certified

All kitchen and lavatory model numbers starting with the prefix "GT" or "LG" meet NSF 61/9 Annex G Lead Requirements.

ADA Compliant

Models displaying the International Symbol of Accessibility are accessible by physically disadvantaged persons and meet all ADA/ANSI A117.1 requirements.

CalGreen Compliant

All items with this logo meet or exceed the flow rate criteria of the California Green Building Code.

CEC Compliant

All model numbers beginning with LG, G and GT's meet the requirements of the California Energy Commission.

UltraSeal™

All items with this logo include brass 1/4-turn cartridge and ceramic disc technology for lifelong leak-free operation. Retrofits into most existing widespread valve bodies.

SecurePfit™

All items with this logo include a unique fixed -hub handle which threads directly to the valve cartridge for significant structural rigidity.

WaterSense℠

We went green more than a decade ago. Our initiative with products that were certified by the Environmental Protection Agency's WaterSense program started in 2007, long before others heeded the call. Faucets engineered to reduce water consumption by 30% or more — without sacrificing performance — were crucial to us as good citizens. We'll continue to create innovations that support conscientious households, and the future of our planet.

CEC Compliant

Less usage never felt so good. With Pfister faucets, being water-wise requires no sacrifice. In fact, meeting the California Energy Commission's standards is likely unnoticeable on a daily basis. What you do know is that your shower head meets the strict WaterSense performance guidelines and that you're using significantly less water without any extra effort. Hooray for innovation that's effective and enjoyable!

CalGreen Compliant

We got this. Many Pfister products already meet or exceed the California Green Building Code. Which means that we've committed to reduce the overall use of potable water within any given building by at least 20%. This stringent measurement meets Cal Green criteria, but we're always improving to exceed current standards. Future generations can count on us.

Water Conservation

Pfister makes it easy to conserve water. Eco-Pfriendly™ aerators and inserts are available for Kitchen, Lavatory and Showerhead products. Locate your product on the following charts to choose the correct option for your water conserving needs.

Kitchen		0.5 gpm Spare Part SKU#				1.0 gpm Spare Part SKU#						1.5 gpm Spare Part SKU#			
Family	**Series**	**941-4320**	**941-8180**	**941-8190**	**941-8200**	**941-4440**	**941-4450**	**941-4500**	**941-6820**	**941-7069**	**941-3720**	**941-6830**	**941-7079**	**941-7850**	**941-7870**
Asari	GT-529		•					•							•
Brislin	GT-529		•					•							•
Bruton	GT-529		•					•							•
Frontera	GT-529		•					•							•
Montay	GT-529		•					•							•
Norden	GT-529	•				•						•			
Pfirst Series	G133-1										•				
Pfirst Series	G134-1										•				
Pfirst Series	G134-3										•				
Pfirst Series	G135-1			•			•							•	
Pfirst Series	G171-40			•			•							•	
Pfirst Series	G529				•	•						•	•		
Pfirst Modern	GT529				•	•						•			
Pfirst Modern	GT534				•	•						•			
Port Haven	G-529	•				•						•			
Port Haven	GT-572	•				•						•			
Port Haven	LG-31				•					•			•		
Port Haven	GT-31				•					•			•		
Stellen	LG-529		•					•							•
Stellen	LG-572		•					•							•
Tenet	GT529		•					•							•
Tenet	GT572		•					•							•

Lavatory		0.35 GPM Spare Part SKU#						0.5 GPM Spare Part SKU #						1.0 GPM Spare Part SKU#					
Family	**Series**	**941-4360**	**941-4370**	**941-4380**	**941-4390**	**941-4410**	**941-7109**	**941-4320**	**941-4340**	**941-8180**	**941-8190**	**941-8200**	**941-7099**	**941-4420**	**941-4440**	**941-4480**	**941-4500**	**941-6630**	**941-7069**
Brislin	LG-49						•						•					•	
Deckard	LG-42						•						•					•	
Deckard	LG-49						•						•					•	
Contempra	LG-40/ LG-42					•				•							•		
Contempra	LG-49					•				•							•		
Pfirst Series	LG-142-5/6			•							•					•			
Pfirst Series	LG-142-7/8			•							•					•			
Pfirst Series	LG-143-5/6			•							•					•			
Pfirst Series	LG-143-51/61			•							•					•			
Pfirst Series	LG-148-6			•							•					•			
Pfirst Series	LG-148-7			•							•					•			
Pfirst Series	LG-149-60			•							•					•			
Pfirst Series	LG-149-6X			•							•					•			
Pfirst Modern	LG-142				•							•							•
Pfirst Modern	LG-42				•							•							•
Rhen	LG-42		•								•					•			
Rhen	LG-49		•								•					•			
Tenet	LG-42		•					•							•				
Tenet	LG-49		•					•							•				
Tenet	LG-42		•					•							•				
Tenet	LG-49		•					•							•				
Tisbury	LG-42	•							•					•					
Tisbury	LG-49	•							•					•					
Weller	LG-42		•					•							•				
Weller	LG-48		•					•							•				
Weller	LG-49	•							•					•					

Water Conservation – Kitchens

	Model	Finish	Case Qty	List Price
Eco-Pfriendly™ Aerator 1.75 gpm Aerator Insert	941-292Ø	N/A	1	$7
	941-293Ø	N/A	1	$7

	Model	Finish	Case Qty	List Price
Eco-Pfriendly™ Aerator 1.5 gpm Aerator Insert	941-683Ø	N/A	1	$15
	941-7Ø79	N/A	1	$10
	941-785Ø	N/A	1	$7
	941-787Ø	N/A	1	$7

	Model	Finish	Case Qty	List Price
Eco-Pfriendly™ Aerator 1.0 gpm Aerator Insert	941-444Ø	N/A	1	$16
	941-448Ø	N/A	1	$16
	941-682Ø	N/A	1	$13
	941-7Ø69	N/A	1	$14

	Model	Finish	Case Qty	List Price
Eco-Pfriendly™ Aerator 0.5 gpm Aerator Insert	941-818Ø	N/A	1	$10
	941-819Ø	N/A	1	$16
	941-82ØØ	N/A	1	$6

Water Conservation - Lavatory Faucets

	Model	Finish	Case Qty	List Price
Eco-Pfriendly™ Aerator 0.35 gpm Aerator Insert	941-436Ø	N/A	1	$7
	941-437Ø	N/A	1	$7
	941-438Ø	N/A	1	$7
	941-439Ø	N/A	1	$7
	941-441Ø	N/A	1	$7

	Model	Finish	Case Qty	List Price
Eco-Pfriendly™ Aerator 0.5 gpm Aerator Insert	941-432Ø	N/A	1	$7
	941-434Ø	N/A	1	$16
	941-818Ø	N/A	1	$10
	941-819Ø	N/A	1	$16
	941-82ØØ	N/A	1	$6

	Model	Finish	Case Qty	List Price
Eco-Pfriendly™ Aerator 1.0 gpm Aerator Insert	941-442Ø	N/A	1	$17
	941-444Ø	N/A	1	$16
	941-445Ø	N/A	1	$7
	941-448Ø	N/A	1	$7
	941-45ØØ	N/A	1	$17
	941-663Ø	N/A	1	$11
	941-7Ø69	N/A	1	$14

Water Conservation - Handheld & Showerheads

	Model	Finish	Case Qty	List Price
1.75 gpm Eco Pfriendly™ Showerhead Insert	941-377Ø	N/A	1	$7

	Model	Finish	Case Qty	List Price
1.5 gpm Eco Pfriendly™ Showerhead Insert	941-Ø55Ø	N/A	1	$9

KITCHEN

Pull-Down K-2

Touchless K-7

Culinary K-8

Pull-Out K-9

Bridge K-10

Bar & Prep K-10

Pot Fillers K-13

Soap Dispensers K-14

Pull-Down Kitchen Faucets

Asari™
1-Handle Pull-Down Kitchen Faucet

Model	Finish	Case Qty	List Price
GT529-ASRC	Polished Chrome	3	$517
GT529-ASRGS	Stainless Steel	3	$644
GT529-ASRBG	Brushed Gold	3	$738
GT529-ASRB	Matte Black	3	$688
GT529-ASRBBG	Combo-Matte Black and Brushed Gold	3	$783
GT529-ASRBGS	Combo-Matte Black and Spot Defense Stainless Steel	3	$783

Technical Info

Holes: · 1-Hole or 3-Hole Installation

Features: 1.8 GPM Flow Rate
· 1 or 3-Hole Installation; Single Hole Mounting or Optional Deckplate
· 3 Function Pull-Down Sprayer (Spray, Stream, and Pause)
· 3/8" Connections
· 36" Nylon Braided Supply Lines
· 360˚ Rotating Swivel Spout
· 16.3" Pull-Down Hose Length
· MagnePfit™ Sprayhead Docking
· Spot Defense™ Finish Resists Spots and Fingerprints
· Nylon Hose
· Forward Handle Operation
· Optional Deckplate, Order 961-278* Separately
· Easy to Clean Nozzles
· TiteSeal™ Technology
· Pforever Seal™ Ceramic Disc Valve

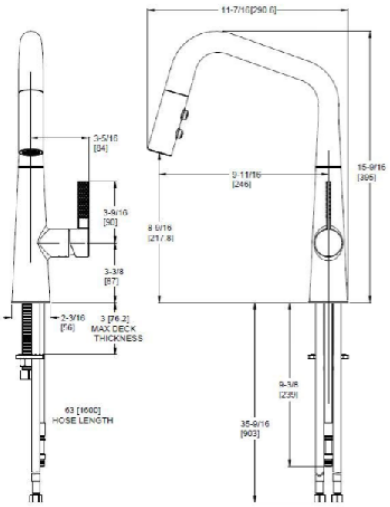

Deckplate Model	Finish	List Price
961-278A	Polished Chrome	$40
961-278S	Stainless Steel	$43
961-278B	Matte Black	$45
961-278BG	Brushed Gold	$70

Brislin
1-Handle Pull-Down Kitchen Faucet

	Model	Finish	Case Qty	List Price
★	GT529-BIC	Polished Chrome	3	$239
★	GT529-BIS	Stainless Steel	3	$269
★	GT529-BIB	Matte Black	3	$300

Holes: · 1 or 3-Hole Installation

Features: · 1.8 GPM Flow Rate
· 13.5" Pull-Down Hose Length
· Nylon Braided Hose
· 2 Function PullDown Sprayer (Spray and Stream)
· Auto-Align™Sprayhead Docking
· 36 in Nylon Flex-Line Supply Lines
· Forward Handle Operation
· 360 Degree Rotating Spout
· High Arc Spout
· Pfast Connect
· TiteSeal™ Technology
· Optional 3-Hole Installation Deck Plate Available, Order 961-276* Separately
· Pforever Seal Ceramic Disc Valve

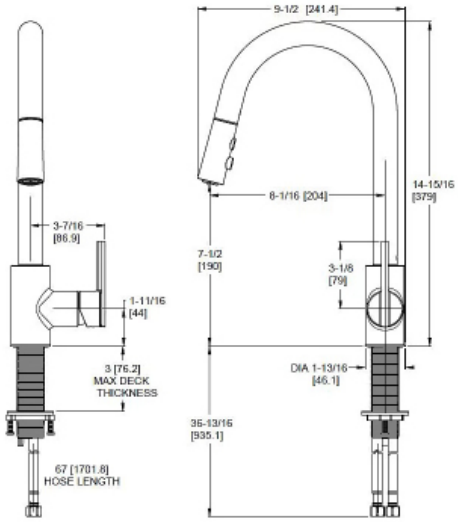

Deckplate Model	Finish	List Price
961-276A	Polished Chrome	$42
961-276S	Stainless Steel	$47
961-276B	Matte Black	$60

★ Core Offering · CEC Compliant · Cal Green Compliant · NSF Lead-Free Certified · ADA Compliant · Accudock™

Frontera™
1-Handle Pull-Down Kitchen Faucet

Model	Finish	Case Qty	List Price
GT529-FOC	Polished Chrome	3	$340
GT529-FOS	Stainless Steel	3	$374
GT529-FOBG	Brushed Gold	3	$420
GT529-FOB	Matte Black	3	$397

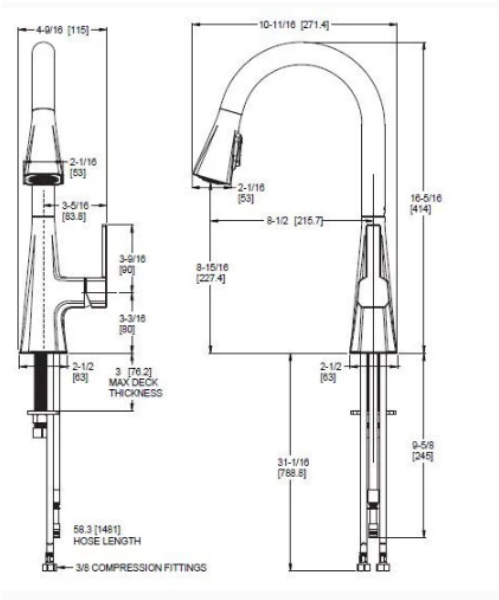

Technical Info

Holes: · 1-Hole Installation

Features:
- 1.8 GPM Flow Rate
- 13.5" Pull-Down Hose Length
- Nylon Braided Hose
- 2 Function PullDown Sprayer (Spray and Stream)
- MagnePfit™Sprayhead Docking
- Auto-Align™Sprayhead Docking
- 36 in Nylon Flex-Line Supply Lines
- Forward Handle Operation
- 360 Degree Rotating Spout
- High Arc Spout
- Pfast Connect
- TiteSeal™ Technology
- Optional 3-Hole Installation Deck Plate Available, Order 961-258* Separately
- Pforever Seal Ceramic Disc Valve

Deckplate Model	Finish	List Price
961-287A	Polished Chrome	$40
961-287S	Stainless Steel	$45
961-287B	Matte Black	$58
961-287BG	Brushed Gold	$64

Montay™
1-Handle Pull-Down Kitchen Faucet

	Model	Finish	Case Qty	List Price
★	GT529-MTC	Polished Chrome	3	$609
★	GT529-MTS	Stainless Steel	3	$684
	GT529-MTD	Polished Nickel	3	$684
★	GT529-MTB	Matte Black	3	$730
	GT529-MTBG	Brushed Gold	3	$728

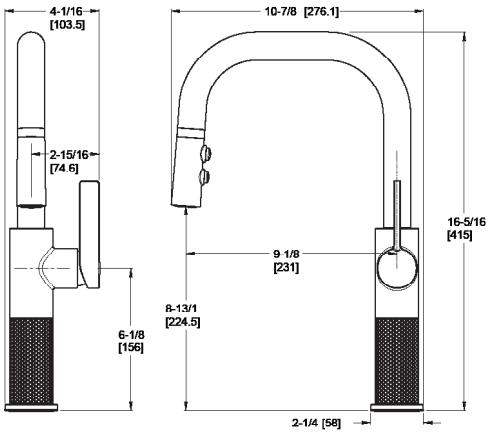

Holes: · 1-Hole Installation

Features:
- 1.8 GPM Flow Rate
- 13.5" Pull-Down Hose Length
- Nylon Braided Hose
- 2 Function PullDown Sprayer (Spray and Stream)
- MagnePfit™Sprayhead Docking
- Auto-Align™Sprayhead Docking
- 36 in Nylon Flex-Line Supply Lines
- Forward Handle Operation
- 360 Degree Rotating Spout
- High Arc Spout
- Pfast Connect
- TiteSeal™ Technology
- Optional 3-Hole Installation Deck Plate Available, Order 961-258* Separately
- Pforever Seal Ceramic Disc Valve

Deckplate Model	Finish	List Price
961-258A	Polished Chrome	$40
961-258S	Stainless Steel	$45
961-258D	Polished Nickel	$52
961-258B	Matte Black	$58
961-258BG	Brushed Gold	$64

★ Core Offering · CEC Compliant · Cal Green Compliant · NSF Lead-Free Certified · ADA Compliant · Accudock™

Pull-Down Kitchen Faucets

Pfirst Modern™
1-Handle Pull-Down Kitchen Faucet

Model	Finish	Case Qty	List Price
GT529-PF2C	Polished Chrome	3	$264
GT529-PF2S	Stainless Steel	3	$296
GT529-PF2SDB	Spot Defense Matte Black	3	$346

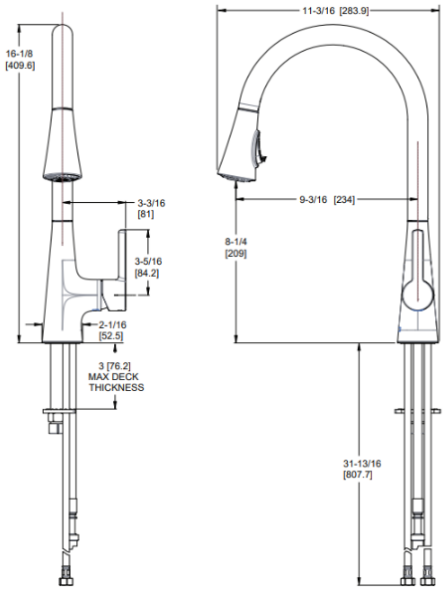

Technical Info

Holes: · 1-Hole Installation

Features:
- 1.5 GPM Flow Rate
- 14" Extended Hose Length
- 3600 Rotating High Arc Spout
- 2 Function Pull-Down Sprayer (Spray and Stream)
- AutoDock™ Spray Head Docking
- 60" Braided Nylon Hose
- 12" Pull-Down Hose Length
- Forward Handle Operation
- Optional Deckplate Included
- 32" Integrated Nylon Braided Supply Lines with 3/8" Connections
- TiteSeal™ Technology
- Spot Defense™ Finish Resists Spots and Fingerprints (SDB Only)
- Pforever Seal™ Ceramic Disc Valve
- Limited Lifetime Warranty

Deckplate Model	Finish	List Price
961-296A	Polished Chrome	$25
961-296S	Stainless Steel	$28
961-296SDB	Spot Defense Matte Black	$34

Norden™
1-Handle Pull-Down Kitchen Faucet

GT529-NRC	Polished Chrome	3	$513
GT529-NRS	Stainless Steel	3	$571
GT529-NRB	Matte Black	3	$632

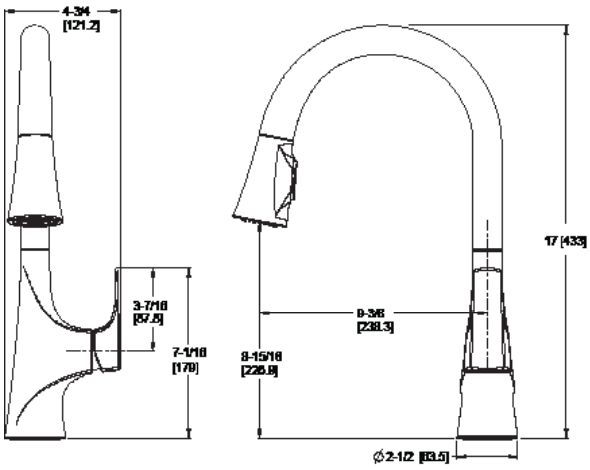

Holes: · 1-Hole Installation

Features:
- 1.8 GPM Flow Rate
- 13.5" Extended Hose Length
- Nylon Braided Hose
- 3 Function Pull-Down Sprayer (Spray, Stream, and Hydroblade™)
- Auto Align Magnetic Spray Head Docking
- 36 in Nylon Flex-Line Supply Lines
- Forward Handle Operation
- 360 Degree Rotating Spout
- High Arc Spout
- Optional Soap Dispenser Available, Order KSD-SRD* Separately
- Optional 3-Hole Installation Deck Plate Available, Order 961-168* Separately
- Pforever Seal Ceramic Disc Valve

Deckplate Model	Finish	List Price
961-168A	Polished Chrome	$29
961-168S	Stainless Steel	$34
961-168B	Matte Black	$47

Core Offering · CEC Compliant · Cal Green Compliant · NSF Lead-Free Certified · ADA Compliant · Accudock™

Tenet™
1-Handle Pull-Down Kitchen Faucet Less Handles

Model	Finish	Case Qty	List Price
GT529-TNTC	Polished Chrome	3	$531
GT529-TNTD	Polished Nickel	3	$638
GT529-TNTGS	Stainless Steel	3	$638
GT529-TNTBG	Brushed Gold	3	$692
GT529-TNTSDB	Spot Defense Matte Black	3	$665

Technical Info

Holes: · 1-Hole Installation

Features:
- 1.8 GPM Flow Rate
- Forward Handle Operation
- 360˚ Rotating Spout
- Nylon Flex Supply Lines
- 3/8" Connections
- Spot Defense™ Finish Resists Spots and Fingerprints (GS & SDB Only)
- Ultra Seal™ Ceramic Disc Valve
- Handle ordered separately

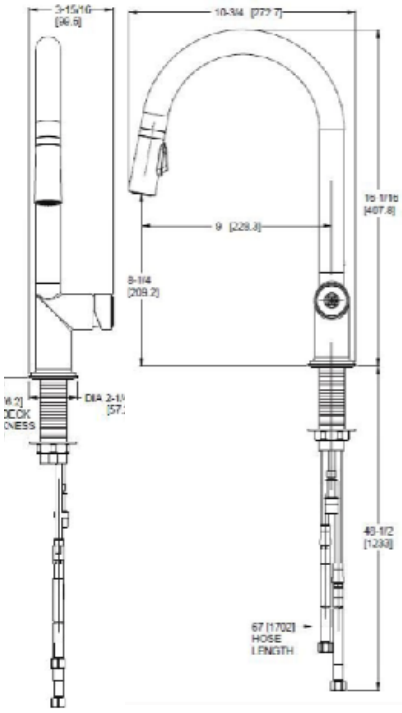

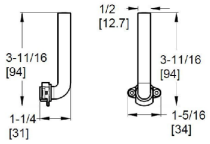

Tenet Handle	Finish	List Price
HHL-GTTNTC	Polished Chrome	$74
HHL-GTTNTD	Polished Nickel	$88
HHL-GTTNTGS	Stainless Steel	$88
HHL-GTTNTBG	Brushed Gold	$97
HHL-GTTNTSDB	Spot Defense Matte Black	$94

Deckplate Model	Finish	List Price
951-215A	Polished Chrome	$48
951-215D	Polished Nickel	$53
951-215S	Stainless Steel	$53
951-215BG	Brushed Gold	$63
951-215B	Spot Defense Matte Black	$58

Core Offering · CEC Compliant · Cal Green Compliant · NSF Lead-Free Certified · ADA Compliant · Accudock™

Pull-Down Kitchen Faucets

Port Haven™
1-Handle Pull-Down Kitchen Faucet

Model	Finish	Case Qty	List Price
GT529-TDC	Polished Chrome	3	$601
GT529-TDS	Stainless Steel	3	$670
GT529-TDD	Polished Nickel	3	$726
GT529-TDY	Tuscan Bronze	3	$720
GT529-TDBG	Brushed Gold	3	$726

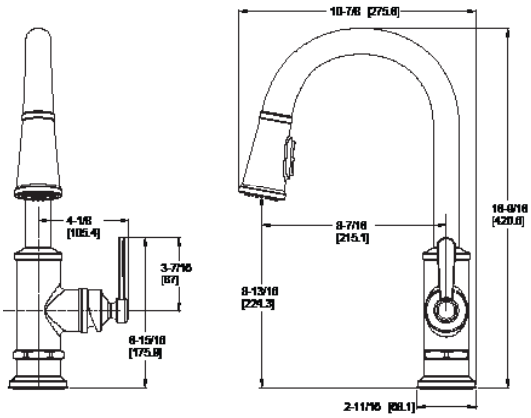

Technical Info

Holes: · 1-Hole Installation

Features:
- 1.8 GPM Flow Rate
- 13.5" Pull-Down Hose Length
- Nylon Braided Hose
- 3 Function Pull-Down Sprayer (Spray, Stream,and Hydroblade™)
- Auto-Align™ Sprayhead Docking
- MagnePfit™ Sprayhead Docking
- 36 in Nylon Flex-Line Supply Lines
- Forward Handle Operation
- 360 Degree Rotating Spout
- High Arc Spout
- Optional Soap Dispenser Available, Order KSD-SRD* Separately
- Optional 3-Hole Installation Deck Plate Available, Order 961-254* Separately
- Pforever Seal Ceramic Disc Valve

Deckplate Model	Finish	List Price
961-254A	Polished Chrome	$44
961-254S	Stainless Steel	$48
961-254D	Polished Nickel	$52
961-254Y	Tuscan Bronze	$52
961-254BG	Brushed Gold	$57

Stellen™
1-Handle Pull-Down Kitchen Faucet

	Model	Finish	Case Qty	List Price
★	LG529-SAC	Polished Chrome	3	$378
★	LG529-SAS	Stainless Steel	3	$442
★	LG529-SAB	Matte Black	3	$567
★	LG529-SABG	Brushed Gold	3	$580

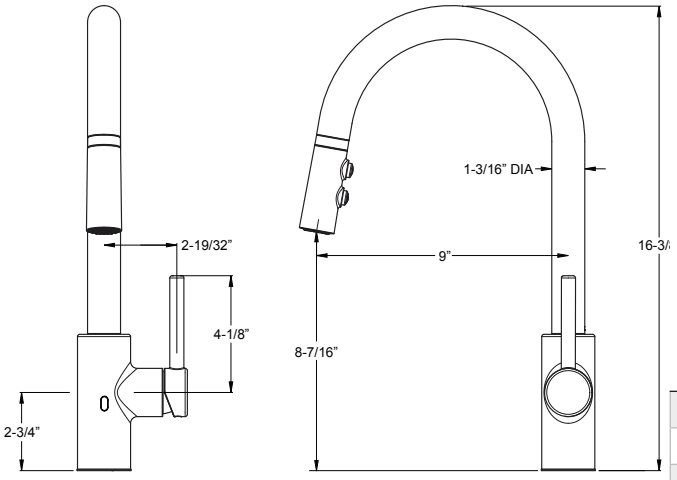

Technical Info

Holes: · 1 or 3-Hole 8" Installation

Features:
- AccuDock™ Sprayhead
- Ceramic Disc Valve
- High Arc Pull-Down Swivel Spout
- Metal Lever Handle
- Pfast Connect Supply Lines
- Three-Function Sprayhead: Stream, Spray, and Pause
- Forward Only Handle Operation
- Single Post Mounting Ring and 3-Hole Deckplate Included
- 1.8 gpm @ 60 psi

Deckplate Model	Finish	List Price
961-219A	Polished Chrome	$20
961-219S	Stainless Steel	$23
961-219B	Matte Black	$33
961-219BG	Brushed Gold	$40

★ Core Offering · CEC Compliant · Cal Green Compliant · NSF Lead-Free Certified · ADA Compliant · Accudock™

Touchless Kitchen Faucet

Stellen™ with React™
1-Handle Touchless Kitchen Faucet

	Model	Finish	Case Qty	List Price
★	LG529-ESAC	Polished Chrome	3	$555
★	LG529-ESAS	Stainless Steel	3	$610
★	LG529-ESAB	Matte Black	3	$666

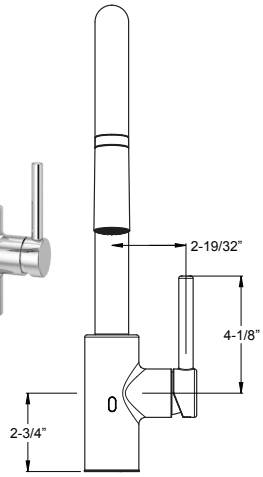

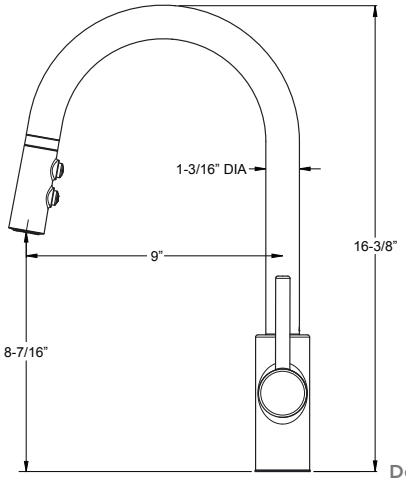

Technical Info

Holes:
- 1 or 3-Hole 8" Installation

Features:
- React™: Touch-Free Sensor Technology
- Smartstop 3-Minute Auto Shut Off
- Temp Adjust Allows For Above Deck Temperature Control
- AccuDock™ Sprayhead
- Ceramic Disc Valve
- Pfast Connect Supply Lines
- High Arc Pull-Down Swivel Spout
- Metal Lever Handle
- Three-Function Sprayhead: Stream, Spray, and Pause
- Forward Only Handle Operation
- Single Post Mounting Ring and 3-Hole Deckplate Included
- Battery Pack (952-ØØ7Ø) Sold Separately
- 1.8 gpm @ 60 psi

Deckplate Model	Finish	List Price
961-219A	Polished Chrome	$20
961-219S	Stainless Steel	$23
961-219B	Matte Black	$33

Core Offering | CEC Compliant | Cal Green Compliant | NSF Lead-Free Certified | ADA Compliant | Accudock™

Culinary

Bruton™
Culinary Kitchen Faucet

Model	Finish	Case Qty	List Price
GT529-BRUC	Polished Chrome	3	$719
GT529-BRUS	Stainless Steel	3	$792
GT529-BRUB	Matte Black	3	$874
GT529-BRUBG	Brushed Gold	3	$954

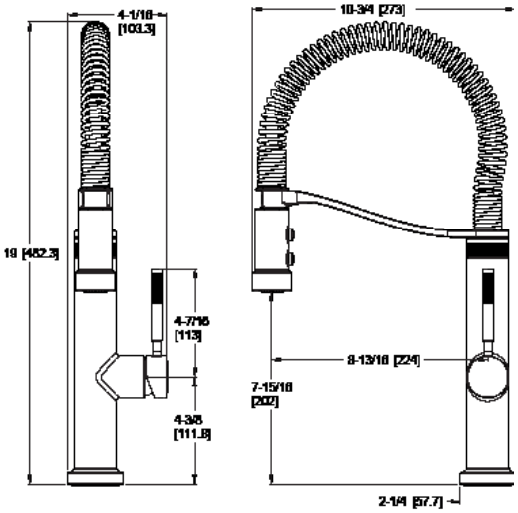

Technical Info

Holes:
- 1-Hole Installation

Features:
- 1.8 gpm Flow Rate
- 3 Function Pull-Down Sprayer (Spray, Stream, and Pause)
- 3/8" Connections
- 360˚ Rotating Spout
- 11" Pull-Down Hose Length
- Braided Nylon Hose
- MagnePfit™ Sprayhead Docking
- Forward Handle Operation
- Optional 3-Hole Installation Deck Plate Available, Order 961-258* Separately
- Nylon Flex-Line Supply Lines
- Wipe Clean™ Nozzles
- Pfast Connect™
- TiteSeal™ Technology
- Pforever Seal™ Ceramic Disc Valve

Deckplate Model	Finish	List Price
961-258A	Polished Chrome	$40
961-258S	Stainless Steel	$45
961-258B	Matte Black	$58
961-258BG	Brushed Gold	$69

Core Offering · CEC Compliant · Cal Green Compliant · NSF Lead-Free Certified · ADA Compliant · Accudock™

Pull-Out Kitchen Faucets

Pfirst Series™
1-Handle Pull-Out Kitchen Faucet

Model	Finish	Case Qty	List Price
★ G133-10CC	Polished Chrome	3	$187
★ G133-10SS	Stainless Steel	3	$216

Technical Info

Holes: · 1 or 3-Hole 8" Installation

Features:
- Ceramic Disc Valve
- Metal Lever Handle
- Two-Function Sprayhead: Stream and Spray
- Forward Only Handle Operation
- Single Post Mounting Ring and 3-Hole Deckplate Included
- 1.8 gpm @ 60 psi

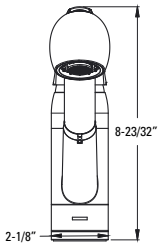

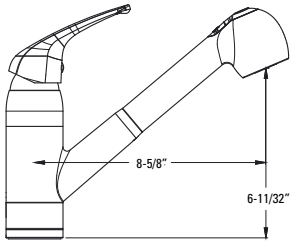

Deckplate Model	Finish	List Price
931-062A	Polished Chrome	$40
931-062S	Stainless Steel	$45

Pfirst Modern™
1-Handle Pull-Out Kitchen Faucet

GT534-PFMC	Polished Chrome	3	$202
GT534-PFMS	Stainless Steel	3	$233
GT534-PFMSDB	Spot Defense Matte Black	3	$261

Holes: · 1 or 3-Hole 8" Installation

Features: 1.5 GPM Flow Rate
- 2 Function Pullout Sprayer (Spray & Stream)
- 53" Braided Nylon Hose
- 17" Pull-Out Hose Length
- AutoDock™ Sprayhead Docking
- Spot Defense™ Finish Resists Spots and Fingerprints (SDB Only)
- 32" Integrated Nylon Briaded Supply Lines with 3/8" Connections
- 1200 Swivel Spout
- Optional Deckplate
- TiteSeal™ Deckplate
- Pforever Seal™ Ceramic Disc Valve
- Limited Lifetime Warrant

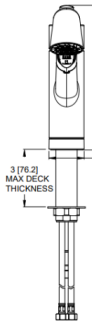

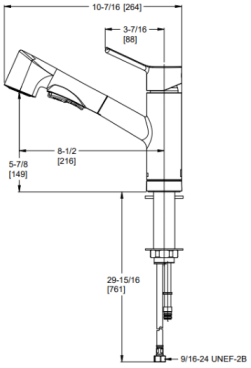

Deckplate Model	Finish	List Price
961-215A	Polished Chrome	$40
961-215S	Stainless Steel	$45
961-215SDB	Spot Defense Matte Black	$58

Core Offering · CEC Compliant · Cal Green Compliant · NSF Lead-Free Certified · ADA Compliant · Accudock™

Bridge

Port Haven™
Bridge Kitchen
Faucet with Side Spray

Model	Finish	Case Qty	List Price
LG31-TDC	Polished Chrome	3	$1,016
LG31-TDS	Stainless Steel	3	$1,162
LG31-TDD	Polished Nickel	3	$1,162
LG31-TDY	Tuscan Bronze	3	$1,199
LG31-TDBG	Brushed Gold	3	$1,243

Technical Info

Holes: · 3-Hole 8" Installation

Features:
- Ceramic Disc Valves
- High Arc Pull-Down Swivel Spout
- Optional matching side sprayer included
- Metal Lever Handles
- 8" On Center
- Included Ceramic and Metal Hot and Cold Indicator Caps
- 1.8 gpm @ 60 psi

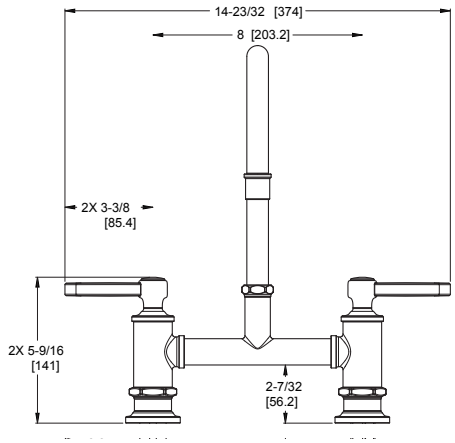

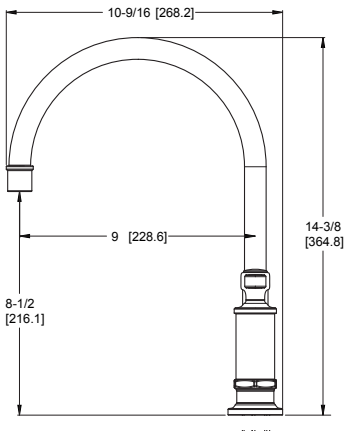

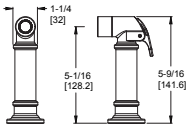

Bar / Prep

Montay™
1-Handle Bar
Kitchen Faucet

Model	Finish	Case Qty	List Price
GT572-MTC	Polished Chrome	3	$501
GT572-MTS	Stainless Steel	3	$621
GT572-MTD	Polished Nickel	3	$621
GT572-MTB	Matte Black	3	$660
GT572-MTBG	Brushed Gold	3	$706

Technical Info

Holes: · 1 or 3-Hole 8" Installation

Features:
- AccuDock™ Sprayhead
- Ceramic Disc Valve
- High Arc Pull-Down Swivel Spout
- Metal Lever Handle
- Three-Function Sprayhead: Stream, Spray, and Pause
- Forward Only Handle Operation
- Single Post Mounting Ring and 3-Hole Deckplate Included
- 1.8 gpm @ 60 psi

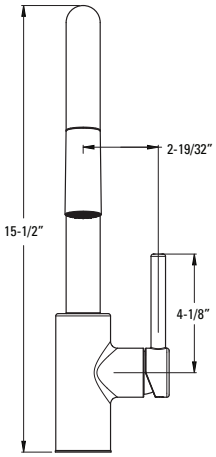

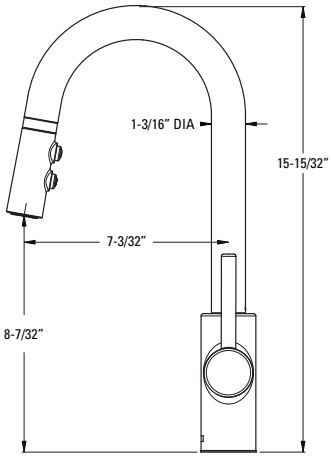

Core Offering · CEC Compliant · Cal Green Compliant · NSF Lead-Free Certified · ADA Compliant · Accudock™

Port Haven™
1-Handle Pull-Down
Bar/Prep Kitchen Faucet

Model	Finish	Case Qty	List Price
GT572-TDC	Polished Chrome	3	$578
GT572-TDS	Stainless Steel	3	$659
GT572-TDD	Polished Nickel	3	$751
GT572-TDBG	Brushed Gold	3	$751
GT572-TDY	Tuscan Bronze	3	$751

Technical Info

Holes: · 1-Hole 8" Installation

Features:
- MagnePfit™ Sprayhead Docking
- AutoAlign™ Sprayhead Docking
- Low Arc Pull-Down Swivel Spout
- Metal Lever Handle
- Two-Function Sprayhead: Stream and Spray
- 360˚ Rotating Spout
- Forward Only Handle Operation
- Pfast Connect™
- TiteSeal™ Technology
- Pforever Seal™ Ceramic Disc Valve
- 1.8 gpm @ 60 psi

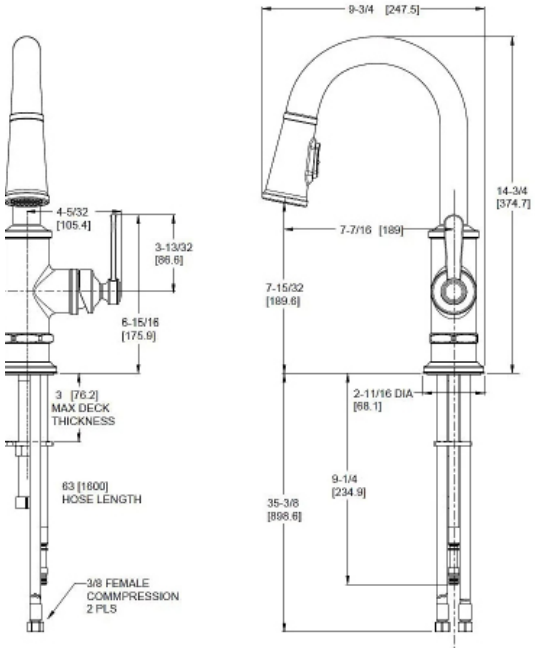

Stellen™
1-Handle Bar
Kitchen Faucet

★	LG572-SAC	Polished Chrome	3	$368
★	LG572-SAS	Stainless Steel	3	$433
★	LG572-SAB	Matte Black	3	$515

Holes: · 1 or 3-Hole 8" Installation

Features:
- AccuDock™ Sprayhead
- Ceramic Disc Valve
- High Arc Pull-Down Swivel Spout
- Metal Lever Handle
- Three-Function Sprayhead: Stream, Spray, and Pause
- Forward Only Handle Operation
- Single Post Mounting Ring and 3-Hole Deckplate Included
- 1.8 gpm @ 60 psi

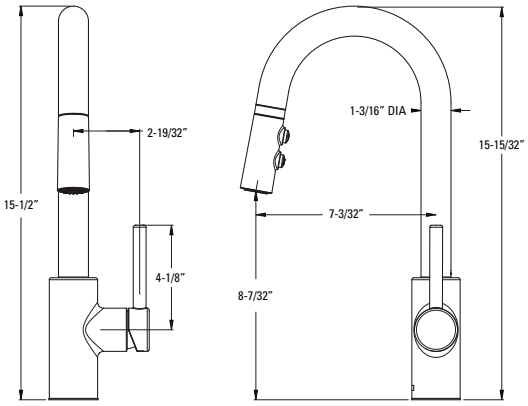

Core Offering · CEC Compliant · Cal Green Compliant · NSF Lead-Free Certified · ADA Compliant · Accudock™

Bar / Prep

Tenet™
1-Handle Bar & Prep Faucet
Less Handles

Model	Finish	Case Qty	List Price
GT572-TNTC	Polished Chrome	3	$386
GT572-TNTD	Polished Nickel	3	$483
GT572-TNTGS	Stainless Steel	3	$483
GT572-TNTBG	Brushed Gold	3	$551
GT572-TNTSDB	Spot Defense Matte Black	3	$607

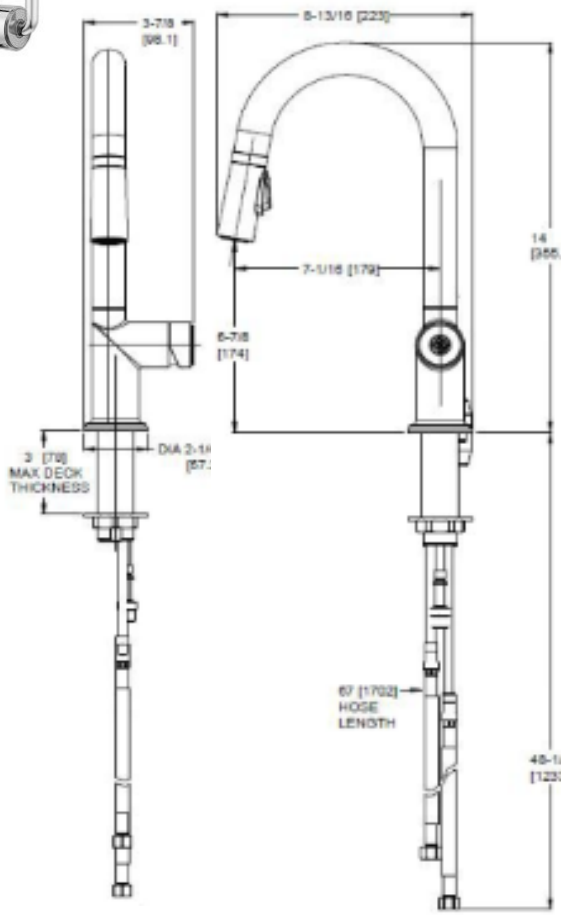

Technical Info

Holes: · 1-Hole Installation

Features:
- 1.8 GPM Flow Rate
- Forward Handle Operation
- 360° Rotating Spout
- Nylon Flex Supply Lines
- 3/8" Connections
- Spot Defense™ Finish Resists Spots and Fingerprints (GS & SDB Only)
- Ultra Seal™ Ceramic Disc Valve
- Handle ordered separately

Tenet Handle	Finish	List Price
HHL-GTTNTC	Polished Chrome	$74
HHL-GTTNTD	Polished Nickel	$88
HHL-GTTNTGS	Stainless Steel	$88
HHL-GTTNTBG	Brushed Gold	$97
HHL-GTTNTSDB	Spot Defense Matte Black	$94

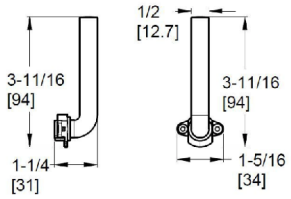

Core Offering | CEC Compliant | Cal Green Compliant | NSF Lead-Free Certified | ADA Compliant | Accudock™

Pot Filler

Lita™
Wall Mount Pot Filler

Model	Finish	Case Qty	List Price
GT533-PFC	Polished Chrome	3	$899
GT533-PFS	Stainless Steel	3	$1,002
GT533-PFD	Polished Nickel	3	$820
GT533-PFY	Tuscan Bronze	3	$978
GT533-PFB	Matte Black	3	$959
GT533-PFBG	Brushed Gold	3	$1,020

Technical Info

Holes: · 1-Hole Installation

Features:
- Ceramic Disc Valves
- Metal Lever Handles
- Dual Handle Shut Off
- 3.0 gpm @ 60 psi

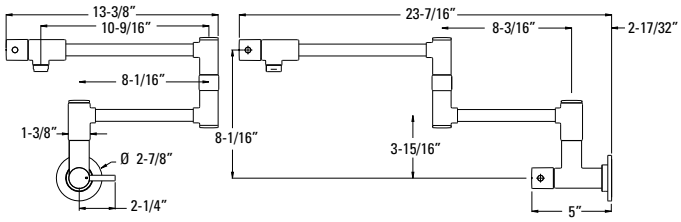

Port Haven™
Wall Mount Pot Filler

GT533-TDS	Stainless Steel	3	$875
GT533-TDD	Polished Nickel	3	$875
GT533-TDY	Tuscan Bronze	3	$928
GT533-TDBG	Brushed Gold	3	$1,082

Holes: · 1-Hole Installation

Features:
- Ceramic Disc Valves
- Metal Lever Handles
- Dual Handle Shut Off
- 3.0 gpm @ 60 psi

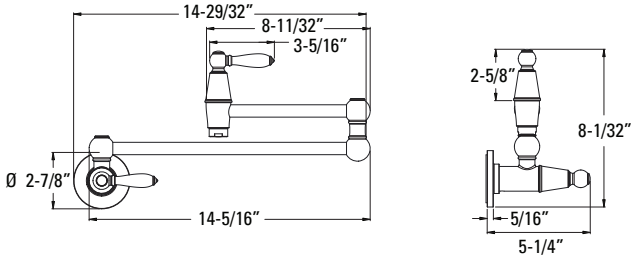

Core Offering · CEC Compliant · Cal Green Compliant · NSF Lead-Free Certified · ADA Compliant · Accudock™

Soap Dispensers

Modern
Soap Dispenser Kit

	Model	Finish	Case Qty	List Price
★	KSD-MDRC	Polished Chrome	6	$136
★	KSD-MDRS	Stainless Steel	6	$159
★	KSD-MDRB	Matte Black	6	$165
	KSD-MDRBG	Brushed Gold	6	$171

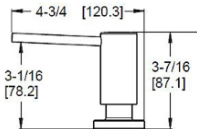

Technical Info

Holes: · 1-Hole

Features:
- Easy Above Counter Refill
- Anti-Residue Design Prevents Soap/Lotion Buildup
- Finishes Match Pfister Faucets
- All Metal Construction

Pfister
Soap Dispenser Kit

★	KSD-LCCC	Polished Chrome	6	$35
★	KSD-LCSS	Stainless Steel	6	$43

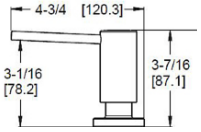

Technical Info

Holes: · 1-Hole

Features:
- Easy Above Counter Refill
- Anti-Residue Design Prevents Soap/Lotion Buildup
- Finishes Match Pfister Faucets
- All Metal Construction

Pfister
Soap Dispenser Kit

★	KSD-SRDCC	Polished Chrome	6	$60
★	KSD-SRDSS	Stainless Steel	6	$72
	KSD-SRDYY	Tuscan Bronze	6	$80
★	KSD-SRDBB	Matte Black	6	$80
	KSD-SRDBG	Brushed Gold	6	$85

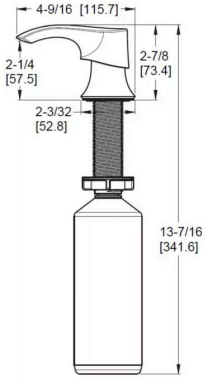

Technical Info

Holes: · 1-Hole

Features:
- Easy Above Counter Refill
- Anti-Residue Design Prevents Soap/Lotion Buildup
- Finishes Match Pfister Faucets
- All Metal Construction

★ Core Offering · CEC Compliant · Cal Green Compliant · NSF Lead-Free Certified · ADA Compliant · Accudock™

BATH

Single Control Lavatory Faucets B-3
Single Control Vessel Faucets B-5
4" Centerset Lavatory Faucets B-5
8" Wall Mount Lavatory Faucets B-5
8" Widespread Lavatory Faucets B-6
Pop-Up Assemblies B-7
Roman Tub Trims B-7
Deck Mount Tub Filler B-8
Handle Kits B-9
Free-Standing Tub Fillers B-10
Pressure Balance Shower Only Trim B-12
Pressure Balance Tub & Shower Trims . . B-13
Pressure Balance Valve Only Trim B-14
Handshowers B-15
Stacked Valves & Diverter B-15
Shower Systems B-16
Slidebar Kits B-17
Diverter Trim Kits B-18
Electronic Touchless Faucet B-20

COLLECTIONS

Brislin™ B-23
Contempra® B-27
Deckard™ B-39
Kenzo™ B-51
Rhen™ B-61
Tenet™ B-71
Tisbury™ B-85
Weller™ B-95

TUB & SHOWER

Extension Kits B-101
Showerheads, Handhelds, & Components B-103

Bath Accessories A-1

Deckard™
Single Control Lavatory

	Model	Finish	Case Qty	List Price
★	LG42-DAP2C	Polished Chrome	3	$231
★	LG42-DAPK	Brushed Nickel	3	$278
★	LG42-DAP2B	Matte Black	3	$323
Deckplates				
★	961-23ØA	Polished Chrome	1	$11
★	961-23ØJ	Brushed Nickel	1	$16
★	961-23ØB	Matte Black	1	$21

Contempra®
Single Control Lavatory

	Model	Finish	Case Qty	List Price
★	LG42-NCPØ	Polished Chrome	3	$249
★	LG42-NKPØ	Brushed Nickel	3	$327
★	LG42-NBPØ	Matte Black	3	$454
★	LG42-NBGPØ	Brushed Gold	3	$550
Deckplates				
★	961-Ø95A	Polished Chrome	1	$24
★	961-Ø95J	Brushed Nickel	1	$29
★	961-Ø95B	Matte Black	1	$51
★	961-Ø95BG	Brushed Gold	1	$67

Weller™
Single Control Lavatory

★	LG42-WRØC	Polished Chrome	3	$204
	LG42-WRØK	Brushed Nickel	3	$239
★	LG42-WRØB	Matte Black	3	$283
Deckplates				
★	961-265A	Polished Chrome	1	$24
	961-265J	Brushed Nickel	1	$33
★	961-265B	Matte Black	1	$41

Kenzo™
Single Control Lavatory

	LG42-DF1C	Polished Chrome	3	$388
	LG42-DF1K	Brushed Nickel	3	$491
	LG42-DF1B	Matte Black	3	$664
Deckplates				
	961-Ø6ØA	Polished Chrome	1	$27
	961-Ø6ØJ	Brushed Nickel	1	$27
	961-Ø6ØB	Matte Black	1	$31

Pfirst Modern™
Single Control Lavatory

★	LG142-Ø6ØØ	Polished Chrome	3	$188
★	LG142-Ø6ØK	Brushed Nickel	3	$238
★	LG142-Ø6ØB	Matte Black	3	$309
Deckplates				
★	961-217A	Polished Chrome	1	$20
★	961-217J	Brushed Nickel	1	$27
★	961-217B	Matte Black	1	$48

Pfirst Modern™
Single Control Lavatory

★	LG42-PFMØC	Polished Chrome	3	$200
	LG42-PFMØK	Brushed Nickel	3	$268
★	LG42-PFMØB	Matte Black	3	$335
	LG42-PFMØBG	Brushed Gold	3	$404
Deckplates				
★	961-217A	Polished Chrome	1	$25
	961-217J	Brushed Nickel	1	$27
★	961-28ØB	Matte Black	1	$31
	96128ØBG	Brushed Gold	1	$42

Pfirst Series™
Single Control Lavatory

	LG142-5ØØØ	Polished Chrome	3	$76

Pfirst Series™
Single Control Lavatory

★	LG142-8ØØØ	Polished Chrome	3	$145

★ Core Offering · CEC Compliant · Cal Green Compliant · Meets EPA WaterSenseSM Standards · NSF Lead-Free Certified · ADA Compliant · UltraSeal™ · SecurePfit™

Rhen™
Single Control Lavatory

Model	Finish	Case Qty	List Price
LG42-RH2C	Polished Chrome	3	$495
LG42-RH2K	Brushed Nickel	3	$649
LG42-RH2B	Polished Nickel	3	$672
LG42-RH2BG	Brushed Gold	3	$700

Tisbury™
Single Control Lavatory

Model	Finish	Case Qty	List Price
LG42-TBØC	Polished Chrome	3	$420
LG42-TBØK	Brushed Nickel	3	$568
LG42-TBØD	Polished Nickel	3	$568
LG42-TBØBG	Brushed Gold	3	$612
LG42-TBØSDB	Spot Defense Matte Black	3	$580

Tenet™
Single Control Lavatory

Model	Finish	Case Qty	List Price
LG42-TNT2C	Polished Chrome	3	$441
LG42-TNT2K	Brushed Nickel	3	$573
LG42-TNT2B	Matte Black	3	$528
LG42-TNT2BG	Brushed Gold	3	$551

Core Offering · CEC Compliant · Cal Green Compliant · Meets EPA WaterSenseSM Standards · NSF Lead-Free Certified · ADA Compliant · UltraSeal™ · SecurePfit™

Single Control Vessel Faucets

Contempra®
Single Control
Vessel Lavatory

	Model	Finish	Case Qty	List Price
★	LG4Ø-NCØØ	Polished Chrome	3	$335
	LG4Ø-NKØØ	Brushed Nickel	3	$411
★	LG4Ø-NBØØ	Matte Black	3	$561
	LG4Ø-NBGØØ	Brushed Gold	3	$679

Bath Reference

4" Centerset Lavatory Faucets

Pfirst Modern™
4" Centerset Lavatory

	Model	Finish	Case Qty	List Price
★	LG48-PFM0C	Polished Chrome	3	$192
	LG48-PFM0K	Brushed Nickel	3	$255
★	LG48-PFM0B	Matte Black	3	$316
	LG48-PFM0BG	Brushed Gold	3	$385

Weller™
4" Centerset Lavatory

	Model	Finish	Case Qty	List Price
★	LG48-WRPC	Polished Chrome	3	$192
	LG48-WRPK	Brushed Nickel	3	$218
★	LG48-WRPB	Matte Black	3	$285

8" Wall Mount Lavatory Faucets

Kenzo™
Wall Mounted
Widespread

Model	Finish	Case Qty	List Price
LG49-DF3C	Polished Chrome	3	$470
LG49-DF3K	Brushed Nickel	3	$618
LG49-DF3B	Matte Black	3	$766

Rhen™
2-Handle Wall Mount
Bathroom Faucet

Model	Finish	Case Qty	List Price
LG49-RH4C	Polished Chrome	3	$467
LG49-RH4K	Brushed Nickel	3	$552
LG49-RH4B	Matte Black	3	$592
LG49-RH4BG	Brushed Gold	3	$621

LØW8Ø1ØØ Rough In Valve is required and must be ordered separately

Tenet™
8" Wall Mount Lavatory

LG49-TNT2C	Polished Chrome	3	$514
LG49-TNT2K	Brushed Nickel	3	$814
LG49-TNT2B	Matte Black	3	$823
LG49-TNT2BG	Brushed Gold	3	$838

LØW8Ø2ØØ is required and must be ordered separately

Core Offering · CEC Compliant · Cal Green Compliant · Meets EPA WaterSenseSM Standards · NSF Lead-Free Certified · ADA Compliant · UltraSeal™ · SecurePfit™

Brislin™
8" Widespread Lavatory

Model	Finish	Case Qty	List Price
LG49-BIØC	Polished Chrome	3	$578
LG49-BIØK	Brushed Nickel	3	$759
LG49-BIØB	Polished Nickel	3	$831

Contempra®
8" Widespread Lavatory

Model	Finish	Case Qty	List Price
★ LG49-NCPC	Polished Chrome	3	$424
LG49-NCPK	Brushed Nickel	3	$493
★ LG49-NCPB	Matte Black	3	$554
LG49-NCPBG	Brushed Gold	3	$672

Deckard™
8" Widespread Lavatory

★	LG49-DAPC	Polished Chrome	3	$392
★	LG49-DAPK	Brushed Nickel	3	$439
★	LG49-DAPB	Matte Black	3	$486

Kenzo™
8" Widespread Lavatory

LG49-DF2C	Polished Chrome	3	$454
LG49-DF2K	Brushed Nickel	3	$706
LG49-DF2C	Matte Black	3	$884

Rhen™
8" Widespread Lavatory

LG49-RH3C	Polished Chrome	3	$655
LG49-RH3K	Brushed Nickel	3	$831
LG49-RH3B	Matte Black	3	$865
LG49-RH3BG	Brushed Gold	3	$906

Pfirst Modern™
8" Widespread Lavatory

LG49-PFMØC	Polished Chrome	3	$271
LG49-PFMØK	Brushed Nickel	3	$353
LG49-PFMØB	Matte Black	3	$386
LG49-PFMØBG	Brushed Gold	3	$407

Tenet™
8" Widespread Lavatory

LG49-TNT3C	Polished Chrome	3	$575
LG49-TNT3K	Brushed Nickel	3	$719
LG49-TNT3B	Matte Black	3	$766
LG49TNT3BG	Brushed Gold	3	$821

Tisbury™
8" Widespread Lavatory

LG49-TBØC	Polished Chrome	3	$578
LG49-TBØK	Brushed Nickel	3	$831
LG49-TBØD	Polished Nickel	3	$831
LG49-TBØBG	Brushed Gold	3	$867
LG49-TBØSDB	Spot Defense Noir Mat	3	$843

Weller™
8" Widespread Lavatory

LG49-WRØC	Polished Chrome	3	$270
LG49-WRØK	Brushed Nickel	3	$381
LG49-WRØB	Matte Black	3	$420

★ Core Offering · CEC Compliant · Cal Green Compliant · Meets EPA WaterSenseSM Standards · NSF Lead-Free Certified · ADA Compliant · UltraSeal™ · SecurePfit™

Pop-Up Assemblies

	Model	Finish	Case Qty	List Price
Push & Seal™	972-Ø97A	Polished Chrome	1	$22
	972-Ø97J	Brushed Nickel	1	$25
	972-Ø97Y	Tuscan Bronze	1	$29
	972-Ø97B	Matte Black	1	$34
	972-Ø97BG	Brushed Gold	1	$44

1-Hole Roman Tub Trim

	Model	Finish	Case Qty	List Price
Deckard™ 1-Hole Roman Tub	RT6-1DAC	Polished Chrome	3	$370
	RT6-1DAK	Brushed Nickel	3	$416
	RT6-1DAB	Matte Black	3	$463

2-Hole Roman Tub Trim

	Model	Finish	Case Qty	List Price
Deckard™ 2-Hole Roman Tub	RT6-2DAC	Polished Chrome	3	$521
	RT6-2DAK	Brushed Nickel	3	$578
	RT6-2DAB	Matte Black	3	$636

Hand Shower 1.8 gpm @ 80 psi

Core Offering | CEC Compliant | Cal Green Compliant | Meets EPA WaterSenseSM Standards | NSF Lead-Free Certified | ADA Compliant | UltraSeal™ | SecurePfit™

3-Hole Roman Tub Trims

Contempra®
3-Hole Roman Tub

	Model	Finish	Case Qty	List Price
★	RT6-5NCC	Polished Chrome	3	$434
	RT6-5NCK	Brushed Nickel	3	$625
★	RT6-5NCB	Matte Black	3	$601
	RT6-5NCBG	Brushed Gold	3	$692

Deckard™
3-Hole Roman Tub

	Model	Finish	Case Qty	List Price
★	RT6-5DAC	Polished Chrome	3	$347
★	RT6-5DAK	Brushed Nickel	3	$393
★	RT6-5DAB	Matte Black	3	$439

Kenzo™
3-Hole Roman Tub

	RT6-5D1C	Polished Chrome	3	$670
	RT6-5D1K	Brushed Nickel	3	$803
	RT6-5D1B	Matte Black	3	$1,010

Pfirst Modern™
3-Hole Roman Tub

★	RT6-5PFMØC	Polished Chrome	3	$287
	RT6-5PFMØK	Brushed Nickel	3	$373
★	RT6-5PFMØB	Matte Black	3	$408
	RT6-5PFMØBG	Brushed Gold	3	$430

Weller™
3-Hole Roman Tub

★	RT6-5WRC	Polished Chrome	3	$309
	RT6-5WRK	Brushed Nickel	3	$373
★	RT6-5WRB	Matte Black	3	$418

Note: ØX615ØR or ØX6Ø5ØR Rough In Valve must be ordered separately for all 3-Hole Roman Tub Trims

★ Core Offering · CEC Compliant · Cal Green Compliant · Meets EPA WaterSenseSM Standards · NSF Lead-Free Certified · ADA Compliant · UltraSeal™ · SecurePfit™

Tisbury™
Single Diverter
Trim Handle

Model	Finish	Case Qty	List Price
HHL-Ø16TBC	Polished Chrome	16	$32
HHL-Ø16TBK	Brushed Nickel	16	$46
HHL-Ø16TBD	Polished Nickel	16	$46
HHL-Ø16TBBG	Brushed Gold	16	$54
HHL-Ø16TBSDB	Spot Defense Matte Black	16	$53

Tisbury™
2-Handle Cross
Handle Kit

Model	Finish	Case Qty	List Price
HHL-Ø49TBC	Polished Chrome	16	$49
HHL-Ø49TBK	Brushed Nickel	16	$66
HHL-Ø49TBD	Polished Nickel	16	$66
HHL-Ø49TBBG	Brushed Gold	16	$72
HHL-Ø49TBSDB	Spot Defense Matte Black	16	$71

Tisbury™
Single Shower Handle

HHL-Ø89TBC	Polished Chrome	16	$32
HHL-Ø89TBK	Brushed Nickel	16	$46
HHL-Ø89TBD	Polished Nickel	16	$46
HHL-Ø89TBBG	Brushed Gold	16	$54
HHL-Ø89TBBG	Spot Defense Matte Black	16	$53

Hillstone™
Single Hole
Free-Standing Tub Filler
with Hand Shower

Model	Finish	Case Qty	List Price
LG6-1HLSC	Polished Chrome	1	$2,129
LG6-1HLSD	Polished Nickel	1	$2,554
LG6-1HLSB	Matte Black	1	$2,660
LG6-1HLSBG	Brushed Gold	1	$2,767

Hand Shower 1.8 gpm @ 80 psi

Rhen™
Single Hole
Free-Standing Tub Filler
with Hand Shower

Model	Finish	Case Qty	List Price
LG6-1RH1C	Polished Chrome	1	$2,141
LG6-1RH1K	Brushed Nickel	1	$2,687
LG6-1RH1B	Matte Black	1	$2,848
LG6-1RH1BG	Brushed Gold	1	$3,018

Tenet™
Single Hole
Free-Standing Tub Filler
with Hand Shower

LG6-1TNTC	Polished Chrome	1	$2,736
LG6-1TNTK	Brushed Nickel	1	$3,021
LG6-1TNTB	Matte Black	1	$3,229
LG6-1TNTBG	Brushed Gold	1	$3,476

Tisbury™
Traditional Double Riser
Free-Standing Tub Filler
with Hand Shower

LG6-1TBC	Polished Chrome	1	$1,836
LG6-1TBK	Brushed Nickel	1	$2,142
LG6-1TBD	Polished Nickel	1	$2,142
LG6-1TBBG	Brushed Gold	1	$2,478
LG6-1TBSDB	Spot Defense Matte Black	1	$2,354

Note: ØX627ØR Rough-In Valve must be ordered separately for all Free-Standing Tub Fillers

Core Offering · CEC Compliant · Cal Green Compliant · Meets EPA WaterSenseSM Standards · NSF Lead-Free Certified · ADA Compliant · UltraSeal™ · SecurePfit™

	Model	Finish	Case Qty	List Price
Verve Free-Standing Tub Filler without Handles	LG6-1VRVC	Polished Chrome	1	$2,277
	LG6-1VRVB	Matte Black	1	$2,969

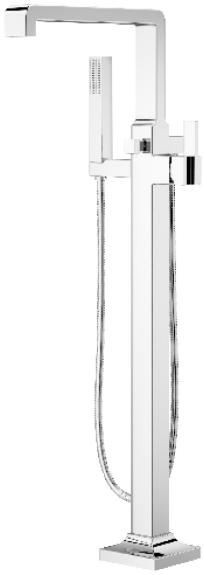

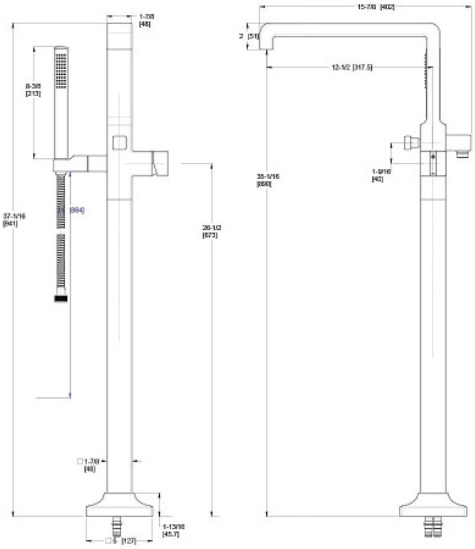

Technical Info

Holes: · 1-Hole Installation

Features:
· Sleek, Modern Design
· Ceramic Disc Valve
· Metal Lever Handle
· 8 gpm @ 60 psi
· Hand Shower 1.8 gpm @ 80 psi

Must Order Free-Standing Rough In Valve Separately.
See Valve Section.

	Model	Finish	Case Qty	List Price
Lever Handle Kit	HHL-LG6-1VRVLC	Polished Chrome	1	$103
	HHL-LG6-1VRVLB	Matte Black	1	$136

Brislin™
Pressure Balance Shower Trim

	Model	Finish	Case Qty	List Price
★	R89-7BIC	Polished Chrome	3	$171
	R89-7BIK	Brushed Nickel	3	$220
★	R89-7BIB	Matte Black	3	$290

Showerhead 1.8 gpm @ 80 psi

Contempra®
Pressure Balance Shower Trim

	Model	Finish	Case Qty	List Price
★	LG89-7NCC	Polished Chrome	3	$219
★	LG89-7NCK	Brushed Nickel	3	$330
★	LG89-7NCB	Matte Black	3	$316
★	LG89-7NCBG	Brushed Gold	3	$368

Showerhead 1.8 gpm @ 80 psi

Deckard™
Pressure Balance Shower Trim

★	LG89-7DAC	Polished Chrome	3	$185
★	LG89-7DAK	Brushed Nickel	3	$231
★	LG89-7DAB	Matte Black	3	$278

Showerhead 1.8 gpm @ 80 psi

Pfirst Modern™
1-Handle Shower Only Trim

★	R89-Ø6ØØ	Polished Chrome	3	$72
★	R89-Ø6ØK	Brushed Nickel	3	$110
★	R89-Ø6ØB	Matte Black	3	$167

Showerhead 1.8 gpm @ 80 psi

Pfirst Modern™
1-Handle Shower Only Trim

★	R89-7PFMC	Polished Chrome	3	$84
	R89-7PFMK	Brushed Nickel	3	$116
★	R89-7PFMB	Matte Black	3	$180
	R89-7PFMBG	Brushed Gold	3	$190

Pfirst Series™
Pressure Balance Shower Trim

★	LG89-Ø2ØØ	Polished Chrome	3	$49

Showerhead 1.8 gpm @ 80 psi

Weller™
Pressure Balance Shower Trim

★	LG89-7WRC	Polished Chrome	3	$108
	LG89-7WRK	Brushed Nickel	3	$183
★	LG89-7WRB	Matte Black	3	$228

Showerhead 1.8 gpm @ 80 psi

★ Core Offering · CEC Compliant · Cal Green Compliant · Meets EPA WaterSenseSM Standards · NSF Lead-Free Certified · ADA Compliant · UltraSeal™ · SecurePfit™

Contempra®
Pressure Balance Tub & Shower Trim

	Model	Finish	Case Qty	List Price
★	LG89-8NCC	Polished Chrome	3	$311
★	LG89-8NCK	Brushed Nickel	3	$458
★	LG89-8NCB	Matte Black	3	$440
★	LG89-8NCBG	Brushed Gold	3	$514

Showerhead 1.8 gpm @ 80 psi

Deckard™
Pressure Balance Tub & Shower Trim

	Model	Finish	Case Qty	List Price
★	LG89-8DAC	Polished Chrome	3	$278
★	LG89-8DAK	Brushed Nickel	3	$346
★	LG89-8DAB	Matte Black	3	$416

Showerhead 1.8 gpm @ 80 psi

Pfirst Modern™
Pressure Balance Tub & Shower Trim

	Model	Finish	Case Qty	List Price
★	R89-8PFMC	Polished Chrome	3	$120
	R89-8PFMK	Brushed Nickel	3	$172
★	R89-8PFMC	Matte Black	3	$251
	R89-8PFMBG	Brushed Gold	3	$263

Pfirst Modern™
Pressure Balance Tub & Shower Trim

	Model	Finish	Case Qty	List Price
★	R89-Ø7ØØ	Polished Chrome	3	$106
	R89-Ø7ØK	Brushed Nickel	3	$157
★	R89-Ø7ØB	Matte Black	3	$194

Showerhead 1.8 gpm @ 80 psi

Pfirst Series™
Pressure Balance

	Model	Finish	Case Qty	List Price
★	LG89-Ø3ØØ	Polished Chrome	3	$56

Showerhead 1.8 gpm @ 80 psi

Weller™
Pressure Balance Tub & Shower Trim

	Model	Finish	Case Qty	List Price
★	LG89-8WRC	Polished Chrome	3	$145
	LG89-8WRK	Brushed Nickel	3	$215
★	LG89-8WRB	Matte Black	3	$28

Showerhead 1.8 gpm @ 80 psi

Core Offering · CEC Compliant · Cal Green Compliant · Meets EPA WaterSenseSM Standards · NSF Lead-Free Certified · ADA Compliant · UltraSeal™ · SecurePfit™

Contempra® Pressure Balance Valve Only Trim

	Model	Finish	Case Qty	List Price
★	R89-1NCC	Polished Chrome	3	$118
★	R89-1NCK	Brushed Nickel	3	$183
★	R89-1NCB	Matte Black	3	$176
★	R89-1NCBG	Brushed Gold	3	$189

Deckard™ Pressure Balance Valve Only Trim

	Model	Finish	Case Qty	List Price
★	R89-1DAC	Polished Chrome	3	$115
★	R89-1DAK	Brushed Nickel	3	$145
★	R89-1DAB	Matte Black	3	$161

Kenzo™ Pressure Balance Valve Only Trim

	R89-1DFC	Polished Chrome	3	$208
	R89-1DFK	Brushed Nickel	3	$328
	R89-1DFB	Matte Black	3	$337

Pfirst Modern™ Pressure Balance Valve Only Trim

★	R89-1PFMC	Polished Chrome	3	$68
	R89-1PFMK	Brushed Nickel	3	$80
★	R89-1PFMB	Matte Black	3	$122
	R89-1PFMBG	Brushed Gold	3	$128

Pfirst Modern™ Pressure Balance Valve Only Trim

	R89-Ø4ØØ	Polished Chrome	3	$59
	R89-Ø4ØK	Brushed Nickel	3	$73
	R89-Ø4ØB	Matte Black	3	$124

Rhen™ Pressure Balance Valve Only Trim

	R89-1RHC	Polished Chrome	3	$265
	R89-1RHK	Brushed Nickel	3	$342
	R89-1RHB	Matte Black	3	$368
	R89-1RHBG	Brushed Gold	3	$352

Tenet™ Pressure Balance Valve Only Trim

	R89-1TNTC	Polished Chrome	3	$278
	R89-1TNTK	Brushed Nickel	3	$356
	R89-1TNTB	Matte Black	3	$380
	R89-1TNTBG	Brushed Gold	3	$395

Tisbury® Pressure Balance Valve Only Trim

	R89-1TBC	Polished Chrome	3	$240
	R89-1TBK	Brushed Nickel	3	$326
	R89-1TBD	Polished Nickel	3	$329
	R89-1TBBG	Brushed Gold	3	$394
	R89-1TBSDB	Spot Defense Matte Black	3	$374

Weller™ Pressure Balance Valve Only Trim

★	R89-1WRC	Polished Chrome	3	$79
	R89-1WRK	Brushed Nickel	3	$118
★	R89-1WRB	Matte Black	3	$164

★ Core Offering · CEC Compliant · Cal Green Compliant · Meets EPA WaterSenseSM Standards · NSF Lead-Free Certified · ADA Compliant · UltraSeal™ · SecurePfit™

Stacked Valve/Diverter Trim

Contempra
Pressure Balance
Valve Only Trim

	Model	Finish	Case Qty	List Price
★	R89-SNCC	Polished Chrome	6	$231
★	R89-SNCK	Brushed Nickel	6	$259
★	R89-SNCB	Matte Black	6	$285
★	R89-SNCBG	Brushed Gold	6	$295

Deckard
Pressure Balance
Valve Only Trim

	Model	Finish	Case Qty	List Price
★	R89-SDAC	Polished Chrome	6	$308
★	R89-SDAK	Brushed Nickel	6	$345
★	R89-SDAB	Matte Black	6	$378

Bath Reference

Handshowers

Modern Round™
2-Piece
Handshower Kit

	Model	Finish	Case Qty	List Price
★	HSK-Ø1SHWC	Polished Chrome	3	$226
	HSK-Ø1SHWK	Brushed Nickel	3	$338
★	HSK-Ø1SHWB	Matte Black	3	$365
	HSK-Ø1SHWBG	Brushed Gold	3	$381

	Handshower Wand				
★		HSC-Ø1SHWC	Polished Chrome	1	$132
		HSC-Ø1SHWK	Brushed Nickel	1	$164
★		HSC-Ø1SHWB	Matte Black	1	$188
		HSC-Ø1SHWBG	Brushed Gold	1	$177

	Handshower				
		HSC-Ø3SHWC	Polished Chrome	1	$148
		HSC-Ø3SHWK	Brushed Nickel	1	$185
		HSC-Ø3SHWSDB	Spot Defense Matte Black	1	$212
		HHSC-Ø3SHWBG	Brushed Gold	1	$199

Modern Square™
2-Piece
Handshower Kit

	Model	Finish	Case Qty	List Price
★	HSK-Ø2SHWC	Polished Chrome	3	$166
★	HSK-Ø2SHWK	Brushed Nickel	3	$259
★	HSK-Ø2SHWB	Matte Black	3	$265

	Handshower Wand				
★		HSC-Ø2SHWC	Polished Chrome	1	$147
★		HSC-Ø2SHWK	Brushed Nickel	1	$183
★		HSC-Ø2SHWB	Matte Black	1	$196

	Handshower				
★		HSC-Ø4SHWC	Polished Chrome	1	$176
★		HSC-Ø4SHWK	Brushed Nickel	1	$220
★		HSC-Ø4SHWSDB	Spot Defense Matte Black	1	$235

★ Core Offering · CEC Compliant · Cal Green Compliant · Meets EPA WaterSenseSM Standards · NSF Lead-Free Certified · ADA Compliant · UltraSeal™ · SecurePfit™

Contempra
Shower System

	Model	Finish	Case Qty	List Price
★	LG16-7NCØC	Polished Chrome	1	$857
★	LG16-7NCØK	Brushed Nickel	1	$1,091
★	LG16-7NCØB	Matte Black	1	$1,288
★	LG16-7NCØBG	Brushed Gold	1	$1,409

Technical Info

Features: Shower System Includes:
· 13" Straight Arm
· 10" Raincan Showerhead
· Stacked Diverter Trim
· Handheld Slidebar
· The Slidebar / Handshower Combo meets ADA requirements
· Multifunction handheld shower gives you three unique spray functions and a pause (Non-Positive Shutoff) feature Valve and optional tubspout can be ordered separately

Deckard
Shower System

★	LG167-DAC	Polished Chrome	1	$1,086
★	LG167-DAK	Brushed Nickel	1	$1,201
★	LG167-DAB	Matte Black	1	$1,518

Features: Shower System Includes:
· 14" Straight Arm
· 10" Raincan Showerhead
· Stacked Diverter Trim
· All Metal Slidebar with Hose
· The Slidebar / Handshower Combo meets ADA requirements
· Multi-Function Hand Shower with Hydrofuse™ technology Valve and optional tubspout can be ordered separately

Core Offering · CEC Compliant · Cal Green Compliant · Meets EPA WaterSenseSM Standards · NSF Lead-Free Certified · ADA Compliant · UltraSeal™ · SecurePfit™

Modern Square™
Slide Bar

	Model	Finish	Case Qty	List Price
★	HSK-41SHWC	Polished Chrome	3	$373
★	HSK-41SHWK	Brushed Nickel	3	$474
★	HSK-41SHWB	Matte Black	3	$490
Handshower wand				
★	HSC-Ø2SHWC	Polished Chrome	1	$147
★	HSC-Ø2SHWK	Brushed Nickel	1	$183
★	HSC-Ø2SHWB	Matte Black	1	$196

Handshower				
★	HSC-Ø4SHWC	Polished Chrome	1	$176
★	HSC-Ø4SHWK	Brushed Nickel	1	$220
★	HSC-Ø4SHWSDB	Spot Defense Matte Black	1	$235
	HSC-Ø4SHWBG	Brushed Gold	1	$248

Modern Round™
Slide Bar

	Model	Finish	Case Qty	List Price
★	HSK-4ØSHWC	Polished Chrome	3	$313
	HSK-4ØSHWK	Brushed Nickel	3	$389
★	HSK-4ØSHWB	Matte Black	3	$495
	HSK-4ØSHWBG	Brushed Gold	3	$472
Handshower Wand				
	HSC-Ø1SHWC	Polished Chrome	1	$132
	HSC-Ø1SHWK	Brushed Nickel	1	$164
	HSC-Ø1SHWB	Matte Black	1	$188
	HSC-Ø1SHWBG	Brushed Gold	1	$177

Handshower				
★	HSC-Ø3SHWC	Polished Chrome	1	$148
	HSC-Ø3SHWK	Brushed Nickel	1	$185
★	HSC-Ø3SHWSDB	Matte Black	1	$212
	HSC-Ø3SHWBG	Brushed Gold	1	$199

Pfister
ADA Hand Held Shower with Slide Bar

★	LG16-5ØØC	Polished Chrome	6	$307
★	LG16-5ØØK	Brushed Nickel	6	$458
	LG16-5ØØD	Polished Nickel	6	$564
★	LG16-5ØØB	Matte Black	6	$572
	LG16-5ØØBG	Brushed Gold	6	$546

Hand Shower 1.8 gpm @ 80 psi

Transitional Round™

	HSK-42SHWC	Polished Chrome	3	$349
	HSK-42SHWD	Polished Nickel	3	$499
	HSK-42SHWK	Brushed Nickel	3	$499
	HSK-42SHWBG	Brushed Gold	3	$586
Handshower Wand				
	HSC-Ø1SHWC	Polished Chrome	1	$132
	HSC-Ø1SHWK	Brushed Nickel	1	$164
	HSC-Ø1SHWD	Polished Nickel	1	$164
	HSC-Ø1SHWBG	Brushed Gold	1	$177

Handshower				
	HSC-Ø3SHWC	Polished Chrome	1	$148
	HSC-Ø3SHWK	Brushed Nickel	1	$185
	HSC-Ø3SHWSDB	Spot Defense Matte Black	1	$212
	HSC-Ø3SHWBG	Brushed Gold	1	$199

Core Offering · CEC Compliant · Cal Green Compliant · Meets EPA WaterSenseSM Standards · NSF Lead-Free Certified · ADA Compliant · UltraSeal™ · SecurePfit™

Contempra®

Model	Finish	Case Qty	List Price
Ø16-NC1C	Polished Chrome	3	$103
Ø16-NC1K	Brushed Nickel	3	$136
Ø16-NC1B	Matte Black	3	$135
Ø16-NC1BG	Brushed Gold	3	$163

Deckard™

Model	Finish	Case Qty	List Price
Ø16-DAØC	Polished Chrome	3	$70
Ø16-DAØK	Brushed Nickel	3	$86
Ø16-DAØB	Matte Black	3	$104

Kenzo™

Ø16-DFØC	Polished Chrome	3	$147
Ø16-DFØK	Brushed Nickel	3	$196
Ø16-DFØB	Matte Black	3	$214

Rhen™

Ø16-RH1C	Polished Chrome	3	$159
Ø16-RH1K	Brushed Nickel	3	$219
Ø16-RH1B	Matte Black	3	$244
Ø16-RH1BG	Brushed Gold	3	$264

Tenet™

Ø16-TNT1C	Polished Chrome	3	$166
Ø16-TNT1K	Brushed Nickel	3	$230
Ø16-TNT1B	Matte Black	3	$255
Ø16-TNT1BG	Brushed Gold	3	$278

Tisbury™

Ø16-TB1C	Polished Chrome	3	$158
Ø16-TB1K	Brushed Nickel	3	$211
Ø16-TB1D	Polished Nickel	3	$211
Ø16-TB1BG	Brushed Gold	3	$276
Ø16-TB1SDB	Spot Defense noir mat	3	$261

Core Offering · CEC Compliant · Cal Green Compliant · Meets EPA WaterSenseSM Standards · NSF Lead-Free Certified · ADA Compliant · UltraSeal™ · SecurePfit™

Touchless Commercial
Lavatory Faucet

A touchless design for clean, effortless use in commercial applications! Simply turn the water on by placing your hands under the faucet. Enjoy the sleek style which fits a variety of public spaces. This faucet provides dependable performance, and an eco-conscious design that has a 0.5 gallon per minute flow rate for maximum efficiency which is compliant to most regulations. Keep germs at bay with React™ Touch-Free Technology and enjoy a tidier sink with this easy-to-use faucet.

LF042EINC

LF042EINC
Shown with Optional
4" Deckplate

Certifications:

- Lead-Free Certified
- Cal Green Certified
- CEC Compliant

	Model	Finish	Case Qty	List Price
Inertia Touchless Faucet ★	LF-Ø42-EINC	Touchless Commercial Bath Faucet (Chrome)	3	$650

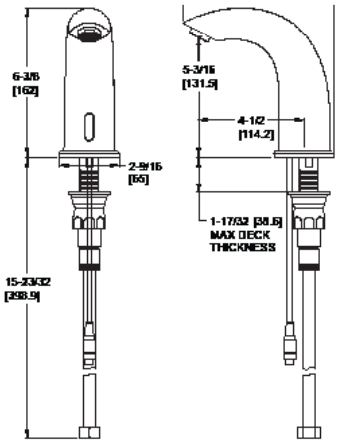

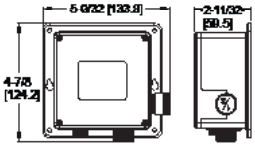

Control Box

Technical Info

Holes: · 1-Hole Installation

Features:
- React™ Touch-Free Technology
- Single Hole Applications
- 0.5 GPM Flow Rate
- Vandal Resistant Aerator
- Fail-Safe Feature (turn off when no power)
- Includes 4 x AA Batteries
- Battery Powered 2yr+ with 150 uses per day
- Mounting Hardware Included
- Easy to assemble
- All Metal Construction
- Lead Free Brass
- Deckplate included
- CUPc, IAPMO, ASME, NSF certified
- Limited 3 Year Commercial Warranty

	95Ø-4229	AC Adapter	1	$52

AC Adapter

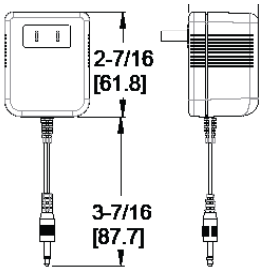

Optional:
- For 3-hole applications
- 6V AC Adapter
- Mixing Valve
- 0.35, 1.0, 1.5 GPM Aerators
- 0.5 GPM Vandal Proof Aerator

Core Offering · CEC Compliant · Cal Green Compliant · Meets EPA WaterSenseSM Standards · NSF Lead-Free Certified · ADA Compliant · UltraSeal™ · SecurePfit™

Bath Collections

Rhen PAGE: B-61

Pfirst Modern PAGE: P-3

Pfirst Series PAGE: P-3

Tisbury PAGE: B-85

Brislin
PAGE: B-23

Tenet
PAGE: B-71

Deckard
PAGE: B-39

Contempra
PAGE: B-27

Kenzo
PAGE: B-51

Weller
PAGE: B-95

Brislin

This is mod that makes your interior design sing. Right angles and soft circles immediately bring to mind the fixtures of Bauhaus. With all the best aspects of function integrated into form, playful sophistication comes together in unified simplicity. For stark purists, it's your perfect centerpiece. For the avant garde or adventurous, Brislin is your building block for clean, layered looks.

Brislin
2-Handle 8" Widespread

Model	Finish	Case Qty	List Price
★ LG49-BI0C	Polished Chrome	1	$578
★ LG49-BI0K	Brushed Nickel	1	$759
★ LG49-BI0B	Matte Black	1	$831

Technical Info

Features:
- 1.2 GPM Flow Rate
- Fixed Hubs
- TiteSeal™ Technology
- Supply Lines Not Included
- Pfast Connect™
- Push & Seal™ Pop-Up Drain
- Pforever Seal™ Ceramic Disc Valves
- Limited Lifetime Warranty

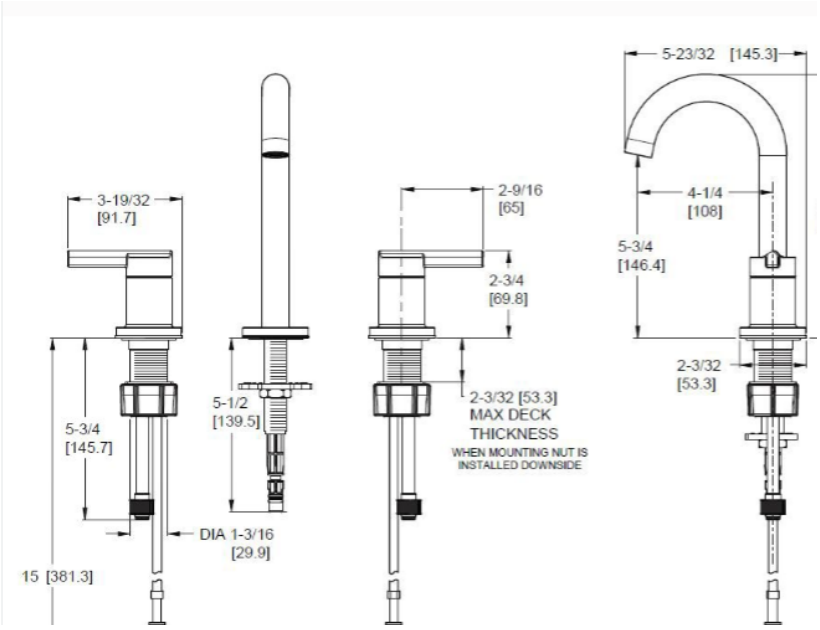

Core Offering | CEC Compliant | Cal Green Compliant | Meets EPA WaterSenseSM Standards | NSF Lead-Free Certified | ADA Compliant | UltraSeal™ | SecurePfit™

Pressure Balance Shower Trim

	Model	Finish	Case Qty	List Price
★	R89-7BIC	Polished Chrome	3	$171
	R89-7BIK	Brushed Nickel	3	$220
★	R89-7BIB	Matte Black	3	$290

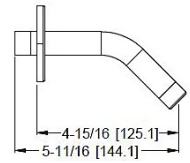

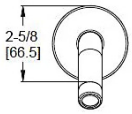

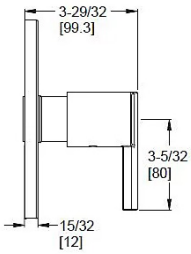

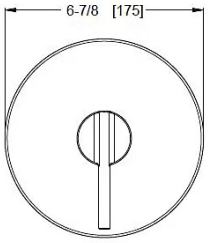

Technical Info

Features:
- SecurePfit™
- Metal Lever Handle
- Hot/Cold Indicator
- Raincan Showerhead Sold Separately
- Easy To Clean Spray Nozzles
- Order 941-Ø55Ø for 1.5 gpm Showerhead Insert

Raincan Showerhead

	Model	Finish	Case Qty	List Price
★	LJ15-BIØC	Polished Chrome	1	$44
	LJ15-BIØK	Brushed Nickel	1	$60
★	LJ15-BIØB	Matte Black	1	$83

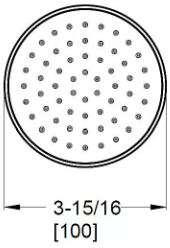

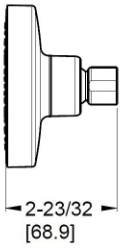

Features:
- Raincan Showerhead
- Easy To Clean Spray Nozzles
- Brass Ball Joint
- Shower Arm and Flange Sold Separately
- Order 941-Ø55Ø for 1.5 gpm Showerhead Insert

Quick Connect Tub Spout

92Ø-216A	Polished Chrome	1	$45
92Ø-216J	Brushed Nickel	1	$55
92Ø-216B	Matte Black	1	$67

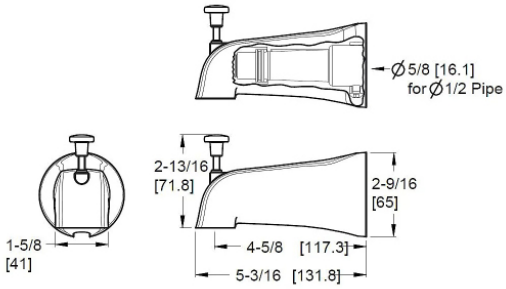

Features:
- QuickConnect Spout™
- Pairs with R897BI* Pressure Balance Shower Trim

Brislin™

★ Core Offering · CEC Compliant · Cal Green Compliant · Meets EPA WaterSenseSM Standards · NSF Lead-Free Certified · ADA Compliant · UltraSeal™ · SecurePfit™

Contempra

This is the faucet that collects compliments by the handful. Contempra looks oh-so-clean that it can go mod or retro, for those of you who like to mix and match. If you've got a Mid-Century heart and an eye for quality, this is your shiny new sweet spot.

Single Control Vessel Lavatory

	Model	Finish	Case Qty	List Price
★	LG4Ø-NCØØ	Polished Chrome	3	$335
★	LG4Ø-NKØØ	Brushed Nickel	3	$411
★	LG4Ø-NBØØ	Matte Black	3	$561
★	LG4Ø-NBGØØ	Brushed Gold	3	$679

Technical Info

Holes: · 1-Hole installation

Features:
- Ceramic Disc Valve
- Metal Lever Handle
- Single Post Mounting Ring
- Grid Strainer Sold Separately
- Hot/Cold Indicator
- 1.2 gpm @ 60 psi

★	Deckplates	961-Ø95A	Polished Chrome	1	$23
★		961-Ø95J	Brushed Nickel	1	$28
★		961-Ø95B	Matte Black	1	$49
★		961-Ø95BG	Brushed Gold	1	$64

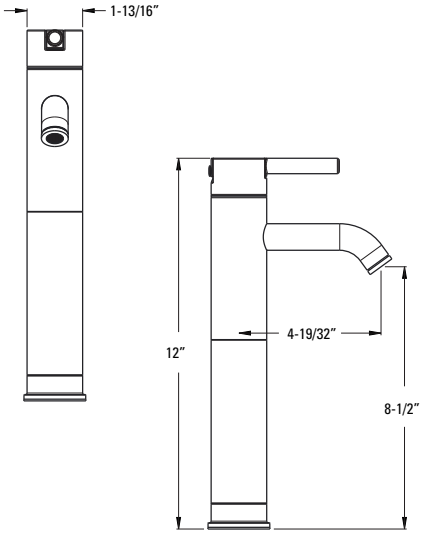

Single Control Lavatory

	Model	Finish	Case Qty	List Price
★	LG42-NCPØ	Polished Chrome	3	$239
★	LG42-NKPØ	Brushed Nickel	3	$314
★	LG42-NBPØ	Matte Black	3	$437
★	LG42-NBGPØ	Brushed Gold	3	$529

Holes: · 1-Hole Installation

Features:
- Ceramic Disc Valve
- Metal Lever Handle
- Single Post Mounting Ring
- Optional 3-Hole Installation Deck Plate Available, Order 961-Ø95* Separately
- Push & Seal Drain Included
- Hot/Cold Indicator
- 1.2 gpm @ 60 psi

★	Deckplates	961-Ø95A	Polished Chrome	3	$23
★		961-Ø95J	Brushed Nickel	3	$28
★		961-Ø95B	Matte Black	3	$49
★		961-Ø95BG	Brushed Gold	3	$64

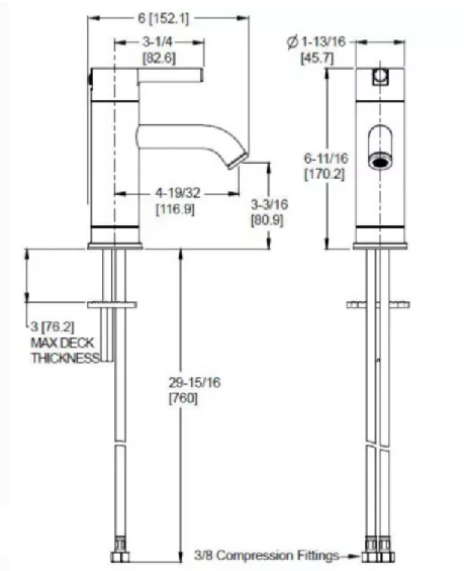

Core Offering · CEC Compliant · Cal Green Compliant · Meets EPA WaterSenseSM Standards · NSF Lead-Free Certified · ADA Compliant · UltraSeal™ · SecurePfit™

8" Widespread Lavatory

	Model	Finish	Case Qty	List Price
★	LG49-NCPC	Polished Chrome	3	$424
★	LG49-NCPK	Brushed Nickel	3	$493
★	LG49-NCPB	Matte Black	3	$554
★	LG49-NCPBG	Brushed Gold	3	$672

Technical Info

Holes: · 3-Hole 8-15" Installation

Features:
- Ceramic Disc Valves
- Metal Lever Handles
- High Arc Spout
- Quick Connect Hose Assembly
- Push & Seal Drain Included
- Order 971-Ø86Ø to Increase Max. Install Depth to 3"
- 1.2 gpm @ 60 psi

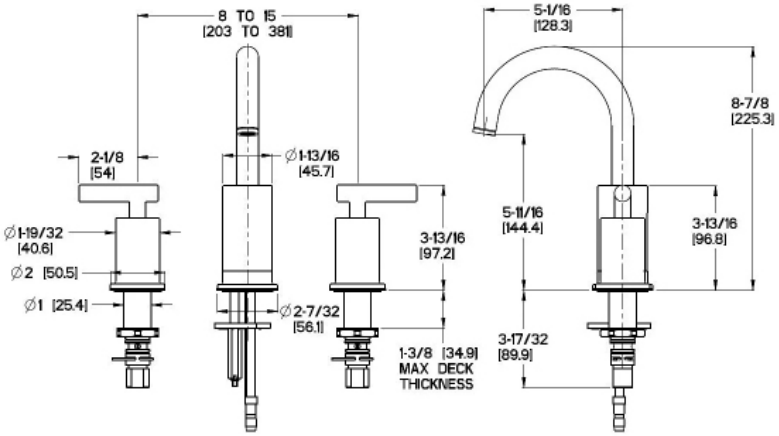

Contempra®

Core Offering · CEC Compliant · Cal Green Compliant · Meets EPA WaterSenseSM Standards · NSF Lead-Free Certified · ADA Compliant · UltraSeal™ · SecurePfit™

Roman Tub Trim

Model	Finish	Case Qty	List Price
★ RT6-5NCC	Polished Chrome	3	$434
★ RT6-5NCK	Brushed Nickel	3	$625
★ RT6-5NCB	Matte Black	3	$601
★ RT6-5NCBG	Brushed Gold	3	$692

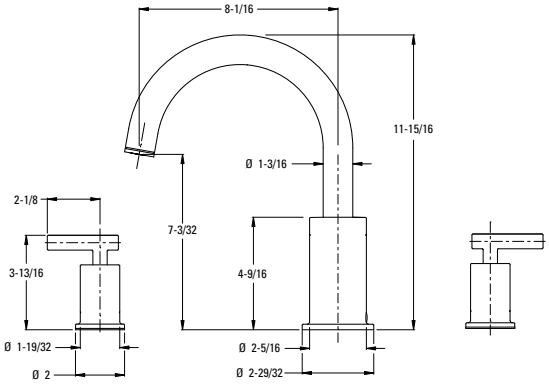

Technical Info

Holes: · 3-Hole

Features:
- Ceramic Disc Valves
- Fixed Spout
- Handles Included

Must Order ØX6-Ø5ØR or ØX6-15ØR Rough In Valve Separately. See Valve Section.

Single Hole Free-Standing Tub Filler with Hand Shower

LG6-1HLSC	Polished Chrome	1	$2,129
LG6-1HLSD	Polished Nickel	1	$2,554
LG6-1HLSB	Matte Black	1	$2,660
LG6-1HLSBG	Brushed Gold	1	$2,767

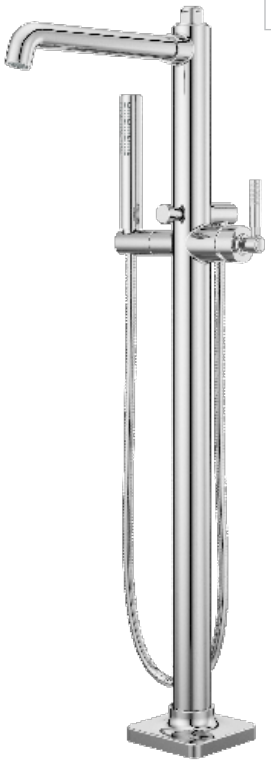

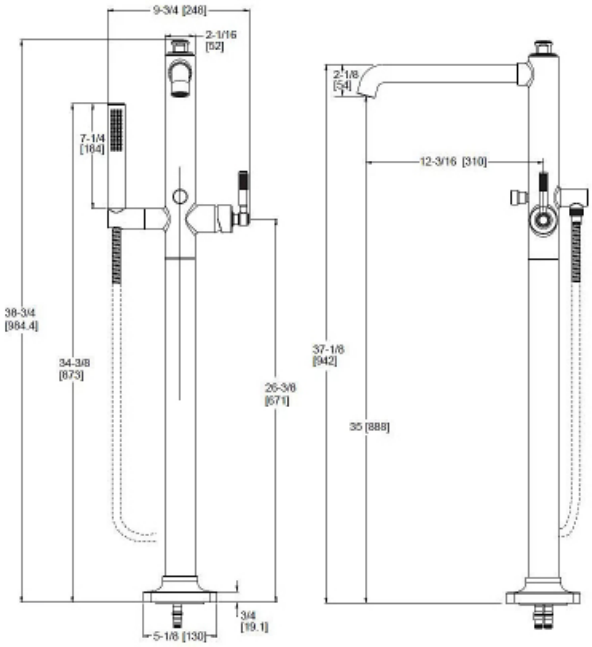

Holes: · 1-Hole Installation

Features:
- All Metal Construction
- Volume and Temperature Control
- Easy to Clean Nozzles
- Includes coordinating tub Hand Shower
- Spout and handles included
- 6.5 gpm @ 45 psi
- Hand Shower 1.8 gpm @ 80 psi

Must Order ØX6-27ØR Valve Separately. See Valve Section.

Core Offering · CEC Compliant · Cal Green Compliant · Meets EPA WaterSenseSM Standards · NSF Lead-Free Certified · ADA Compliant · UltraSeal™ · SecurePfit™

Pressure Balance Tub & Shower Trim

	Model	Finish	Case Qty	List Price
★	LG89-8NCC	Polished Chrome	3	$311
★	LG89-8NCK	Brushed Nickel	3	$458
★	LG89-8NCB	Matte Black	3	$440
★	LG89-8NCBG	Brushed Gold	3	$514

Technical Info

Features:
- SecurePfit™
- Metal Lever Handle
- Hot/Cold Indicator
- Decorative Raincan Showerhead
- Easy To Clean Spray Nozzles
- Quick Connect Metal Diverting Tub Spout
- Order 941-Ø55Ø for 1.5 gpm Showerhead Insert
- 1.75 GPM Flow Rate (Showerhead)

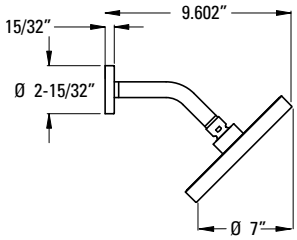

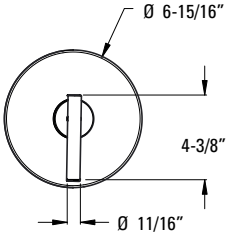

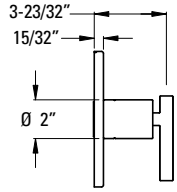

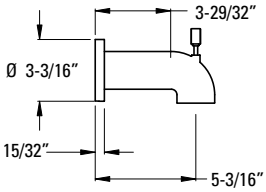

Pressure Balance Shower Trim

	Model	Finish	Case Qty	List Price
★	LG89-7NCC	Polished Chrome	3	$219
★	LG89-7NCK	Brushed Nickel	3	$330
★	LG89-7NCB	Matte Black	3	$316
★	LG89-7NCBG	Brushed Gold	3	$368

Features:
- SecurePfit™
- Metal Lever Handle
- Hot/Cold Indicator
- Decorative Raincan Showerhead
- Easy To Clean Spray Nozzles
- Order 941-Ø55Ø for 1.5 gpm Showerhead Insert
- 1.75 GPM Flow Rate (Showerhead)

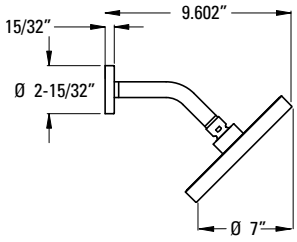

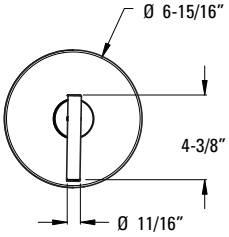

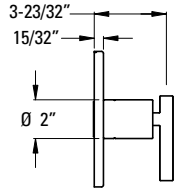

Contempra®

Core Offering | CEC Compliant | Cal Green Compliant | Meets EPA WaterSenseSM Standards | NSF Lead-Free Certified | ADA Compliant | UltraSeal™ | SecurePfit™

Pressure Balance Valve Only Trim

Model	Finish	Case Qty	List Price
R89-1NCC	Polished Chrome	3	$118
R89-1NCK	Brushed Nickel	3	$183
R89-1NCB	Matte Black	3	$176
R89-1NCBG	Brushed Gold	3	$189

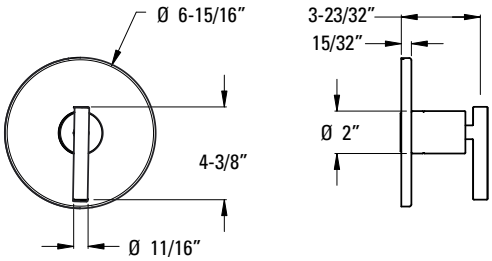

Technical Info

Features:
- SecurePfit™
- Metal Lever Handle
- Hot/Cold Indicator

Diverter Trim Only

Ø16-NC1C	Polished Chrome	3	$103
Ø16-NC1K	Brushed Nickel	3	$136
Ø16-NC1B	Matte Black	3	$135
Ø16-NC1BG	Brushed Gold	3	$163

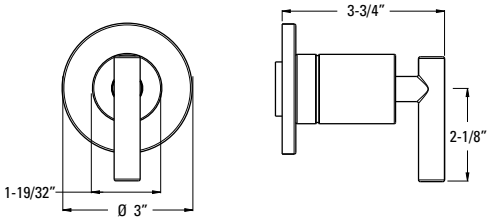

Features:
- SecurePfit™
- Metal Lever Handle and Matching Flange

Must order Ø15-3WDNS (Non-Shared, Cal Green Compliant) or Ø15-6WDS (Shared) Rough-In Valve Separately. See Valve Section.

Stacked Diverter Only Trim

R89-SNCC	Polished Chrome	6	$231
R89-SNCK	Brushed Nickel	6	$259
R89-SNCB	Matte Black	6	$285
R89-SNCBG	Brushed Gold	6	$295

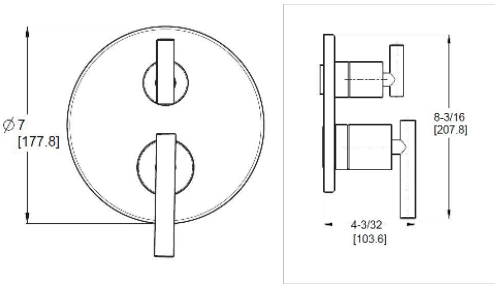

Features:
- SecurePfit™
- Metal Lever Handle
- Hot/Cold Indicator

Must order Ø15-3WDNSS (Non-Shared, Cal Green Compliant) or Ø15-6WDSS (Shared) Stacked Rough-In Valve Separately. See Valve Section.

Core Offering | CEC Compliant | Cal Green Compliant | Meets EPA WaterSenseSM Standards | NSF Lead-Free Certified | ADA Compliant | UltraSeal™ | SecurePfit™

ADA Handheld Shower with Slide Bar

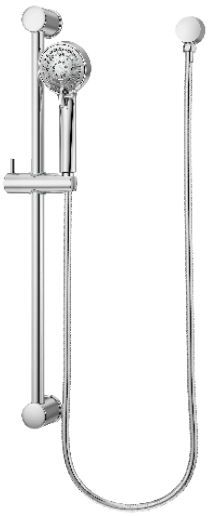

	Model	Finish	Case Qty	List Price
★	LG16-5ØØC	Polished Chrome	3	$307
★	LG16-5ØØK	Brushed Nickel	3	$458
★	LG16-5ØØB	Matte Black	3	$546
★	LG16-5ØØBG	Brushed Gold	3	$572

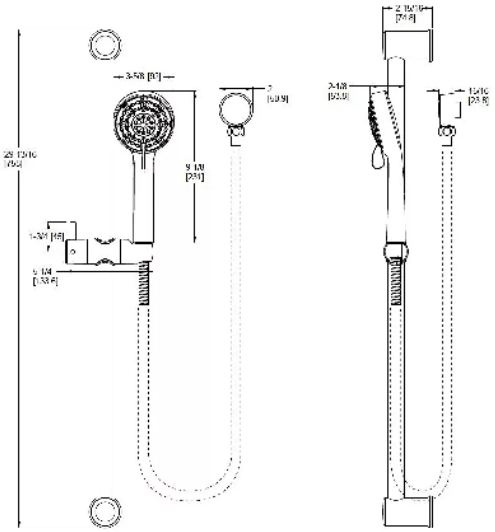

Technical Info

Features:
- 1.75 GPM Flow Rate
- 60" Metal Hose
- All Metal Construction
- Easy to Clean Nozzles
- Mounting Hardware Included
- Valve Not Included

Modern Round 2-Piece Handshower Kit

★	HSK-Ø1SHWC	Polished Chrome	3	$226
	HSK-Ø1SHWK	Brushed Nickel	3	$338
★	HSK-Ø1SHWB	Matte Black	3	$365
	HSK-Ø1SHWBG	Brushed Gold	3	$381

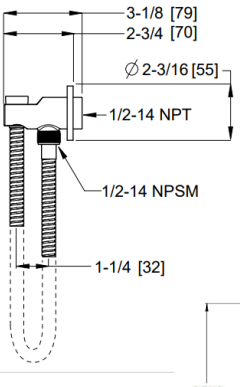

Features:
- Handheld Shower Sold Separately
- 60" Metal Hose
- All Metal Construction
- Valve Not Included

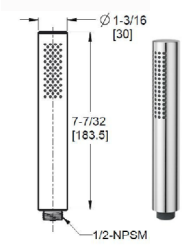

★	HSC-Ø1SHWC	Polished Chrome	1	$132
	HSC-Ø1SHWK	Brushed Nickel	1	$164
★	HSC-Ø1SHWB	Matte Black	1	$188
	HSC-Ø1SHWBG	Brushed Gold	1	$177

Handshower Wand

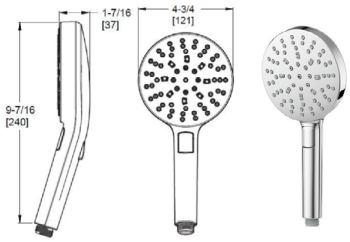

	HSC-Ø3SHWC	Polished Chrome	1	$148
	HSC-Ø3SHWK	Brushed Nickel	1	$185
	HSC-Ø3SHWSDB	Spot Defense Matte Black	1	$212
	HSC-Ø3SHWBG	Brushed Gold	1	$199

Handshower

★ Core Offering · CEC Compliant · Cal Green Compliant · Meets EPA WaterSenseSM Standards · NSF Lead-Free Certified · ADA Compliant · UltraSeal™ · SecurePfit™

Contempra Shower System

Model	Finish	Case Qty	List Price
LG16-7NCØC	Polished Chrome	1	$857
LG16-7NCØK	Brushed Nickel	1	$1,091
LG16-7NCØB	Matte Black	1	$1,288
LG16-7NCØBG	Brushed Gold	1	$1,409

Technical Info

Features:
- All Metal
- Matches Contempra Style & Finishes

Includes:
- 13" Straight Arm
- 10" Raincan Showerhead
- Stacked Diverter Trim
- Handheld Slidebar
- The Slidebar / Handshower Combo meets ADA requirements
- Multifunction handheld shower gives you three unique spray functions and a pause (Non-Positive Shutoff) feature

Raincan Showerhead

Model	Finish	Case Qty	List Price
973-312A	Polished Chrome	1	$99
973-312J	Brushed Nickel	1	$114
973-312B	Matte Black	1	$113
973-312BG	Brushed Gold	1	$201

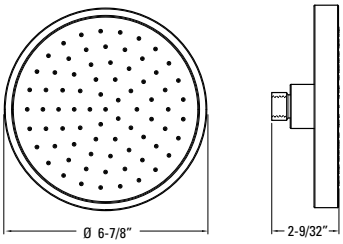

Features:
- Raincan Showerhead
- Easy To Clean Spray Nozzles
- Brass Ball Joint
- Shower Arm and Flange Sold Separately
- Order 941-Ø55Ø for 1.5 gpm Showerhead Insert

10" Modern Round Showerhead

Model	Finish	Case Qty	List Price
USH-Ø3SHWC	Polished Chrome	1	$260
USH-Ø3SHWK	Brushed Nickel	1	$291
USH-Ø3SHWB	Matte Black	1	$322
USH-Ø3SHWBG	Brushed Gold	1	$354

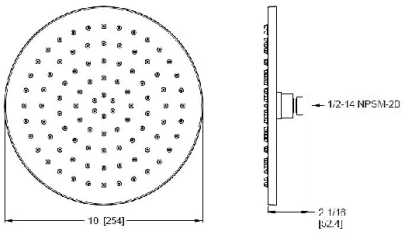

Features:
- Raincan Showerhead
- Easy To Clean Spray Nozzles
- Brass Ball Joint
- Shower Arm and Flange Sold Separately
- Order 941-Ø55Ø for 1.5 gpm Showerhead Insert

Shower Arm Flange

Model	Finish	Case Qty	List Price
USC-20SHWC	Polished Chrome	1	$19
USC-20SHWK	Brushed Nickel	1	$26
USC-20SHWB	Matte Black	1	$20
USC-20SHWBG	Brushed Gold	1	$23

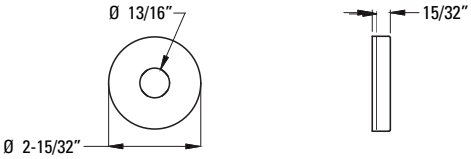

Features:
- All Metal
- Matches Contempra Style & Finishes

Core Offering | CEC Compliant | Cal Green Compliant | Meets EPA WaterSenseSM Standards | NSF Lead-Free Certified | ADA Compliant | UltraSeal™ | SecurePfit™

Straight Shower Arm

	Model	Finish	Case Qty	List Price
★	973-1Ø3A	Polished Chrome	1	$61
★	973-1Ø3J	Brushed Nickel	1	$74
★	973-1Ø3B	Matte Black	1	$135
★	973-1Ø3BG	Brushed Gold	1	$165

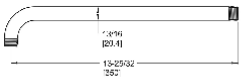

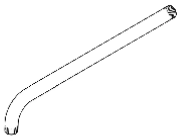

Technical Info

Features:
- All Metal
- Matches Contempra Style & Finishes

Curved Shower Arm

	Model	Finish	Case Qty	List Price
★	973-Ø3ØA	Polished Chrome	1	$20
★	973-Ø3ØJ	Brushed Nickel	1	$46
★	973-Ø3ØB	Matte Black	1	$26
★	973-Ø3ØBG	Brushed Gold	1	$38

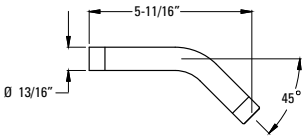

Features:
- Brass Shower Arm
- 1/2" NPT Male Connections

Contempra® Tub Spout

	Model	Finish	Case Qty	List Price
★	92Ø-227A	Polished Chrome	1	$107
★	92Ø-227J	Brushed Nickel	1	$147
★	92Ø-227B	Matte Black	1	$118
★	92Ø-227BG	Brushed Gold	1	$139

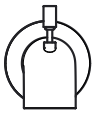

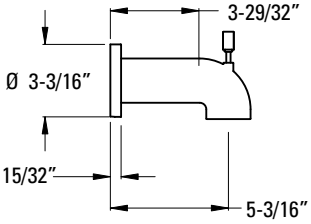

Features:
- All Metal
- Quick Connect Metal Diverting Tub Spout

Non-Diverter Tub Spout

	Model	Finish	Case Qty	List Price
★	92Ø-246A	Polished Chrome	1	$92
★	92Ø-246J	Brushed Nickel	1	$129
★	92Ø-246B	Matte Black	1	$145
★	92Ø-246BG	Brushed Gold	1	$152

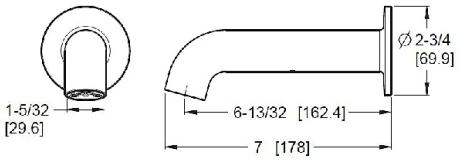

Features:
- All Metal
- Matches Contempra Style & Finishes

Core Offering | CEC Compliant | Cal Green Compliant | Meets EPA WaterSenseSM Standards | NSF Lead-Free Certified | ADA Compliant | UltraSeal™ | SecurePfit™

18" Towel Bar

	Model	Finish	Case Qty	List Price
★	BTB-FT1C	Polished Chrome	3	$60
★	BTB-FT1GS	Spot Defense Brushed Nickel	3	$64
★	BTB-FT1B	Matte Black	3	$67
★	BTB-FT1BG	Brushed Gold	3	$96

Technical Info

Holes: · 2-Hole

Features:
- Premium Metal Construction
- Standard Mounting Bracket
- Concealed Screw Installation
- Mounting Hardware Included

24" Towel Bar

	Model	Finish	Case Qty	List Price
★	BTB-FT2C	Polished Chrome	3	$66
★	BTB-FT2GS	Spot Defense Brushed Nickel	3	$70
★	BTB-FT2B	Matte Black	3	$72
★	BTB-FT2BG	Brushed Gold	3	$102

Holes: · 2-Hole

Features:
- Premium Metal Construction
- Standard Mounting Bracket
- Concealed Screw Installation
- Mounting Hardware Included

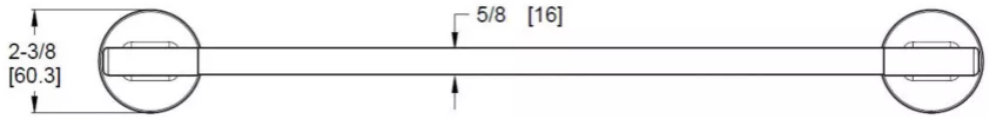

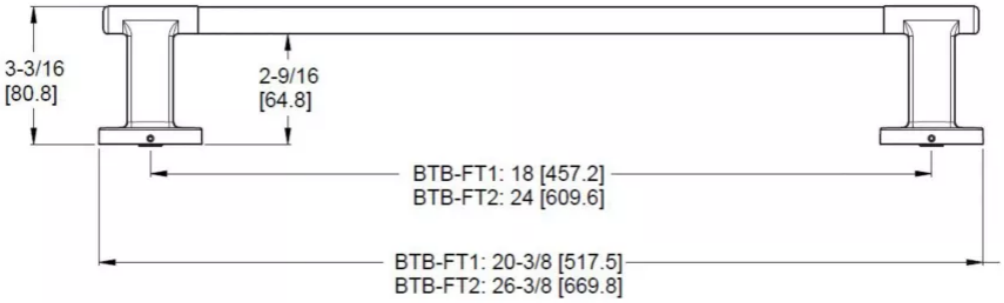

Contempra®

Core Offering · CEC Compliant · Cal Green Compliant · Meets EPA WaterSenseSM Standards · NSF Lead-Free Certified · ADA Compliant · UltraSeal™ · SecurePfit™

Towel Ring

	Model	Finish	Case Qty	List Price
★	BRB-FT0C	Polished Chrome	3	$48
★	BRB-FT0GS	Spot Defense Brushed Nickel	3	$50
★	BRB-FT0B	Matte Black	3	$52
★	BRB-FT0BG	Brushed Gold	3	$73

Technical Info

Holes: · 1-Hole

Features:
· Premium Metal Construction
· Standard Mounting Bracket
· Concealed Screw Installation
· Mounting Hardware Included

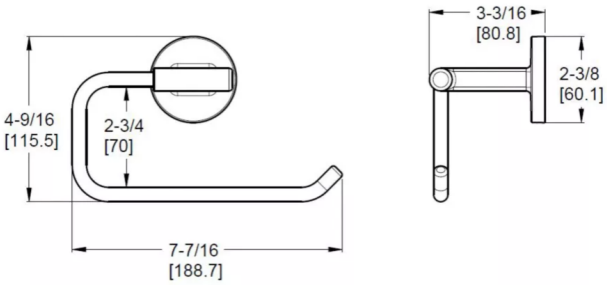

Paper Holder

	Model	Finish	Case Qty	List Price
★	BPH-FT0C	Polished Chrome	3	$58
★	BPH-FT0GS	Spot Defense Brushed Nickel	3	$60
★	BPH-FT0B	Matte Black	3	$62
★	BPH-FT0BG	Brushed Gold	3	$85

Holes: · 2-Hole

Features:
· Premium Metal Construction
· Standard Mounting Bracket
· Concealed Screw Installation
· Mounting Hardware Included
· Swivel Mount Paper Holder

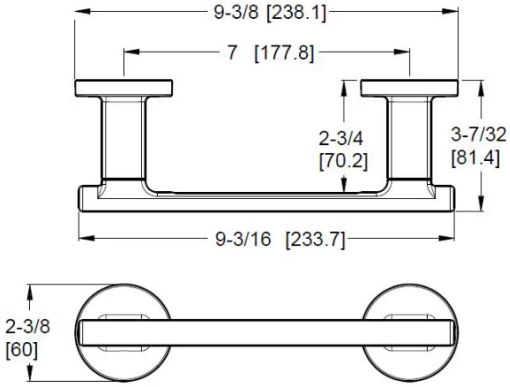

Robe Hook

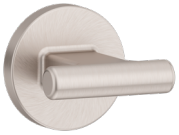

	Model	Finish	Case Qty	List Price
★	BRH-FT0C	Polished Chrome	3	$31
★	BRH-FT0GS	Spot Defense Brushed Nickel	3	$35
★	BRH-FT0B	Matte Black	3	$37
★	BRH-FT0BG	Brushed Gold	3	$52

Holes: · 1-Hole

Features:
· Premium Metal Construction
· Standard Mounting Bracket
· Concealed Screw Installation
· Mounting Hardware Included

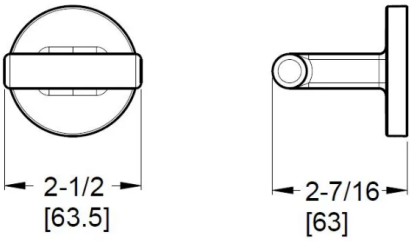

Contempra®

★ Core Offering · CEC Compliant · Cal Green Compliant · Meets EPA WaterSenseSM Standards · NSF Lead-Free Certified · ADA Compliant · UltraSeal™ · SecurePfit™

Deckard

The Deckard Collection embodies soft-modern design by incorporating curves into the familiar sleek, hard-edge motif of modern aesthetics. The clean, horizontal lines in this design create a precise look as the contrasting subtle curves offer balance. The small footprint of this faucet and the thin profile of the spout and handle make this a clean design that is optimal for any modern space.

Single Control Lavatory

	Model	Finish	Case Qty	List Price
★	LG42-DAP2C	Polished Chrome	3	$231
★	LG42-DAPK	Brushed Nickel	3	$278
★	LG42-DAP2B	Matte Black	3	$323
★	961-23ØA	Polished Chrome	1	$11
★	961-23ØJ	Brushed Nickel	1	$16
★	961-23ØB	Matte Black	1	$21

Deckplates

Technical Info

Holes: · 1-Hole Installation

Features:
- Ceramic Disc Valve
- Metal Lever Handle
- High Temp Limit Stop
- Single Post Mounting Ring
- Optional 3-Hole Installation Deck Plate Available, Order 961-23Ø* Separately
- Push & Seal Drain Included
- 1.2 gpm @ 6Ø psi
- Supply lines included on Polished Chrome & Matte Black finish

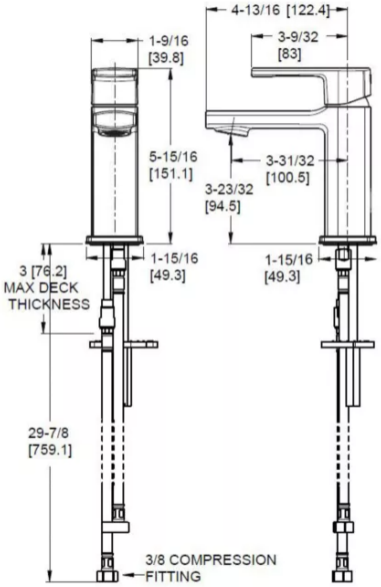

8" Widespread Lavatory

	Model	Finish	Case Qty	List Price
★	LG49-DAPC	Polished Chrome	3	$392
★	LG49-DAPK	Brushed Nickel	3	$439
★	LG49-DAPB	Matte Black	3	$486

Holes: · 3-Hole 8" Installation

Features:
- Ceramic Disc Valves
- Metal Lever Handles
- Fixed Spout
- Push & Seal Drain Included
- Order 971-Ø86Ø to Increase Max. Install Depth to 3"
- 1.2 gpm @ 6Ø psi

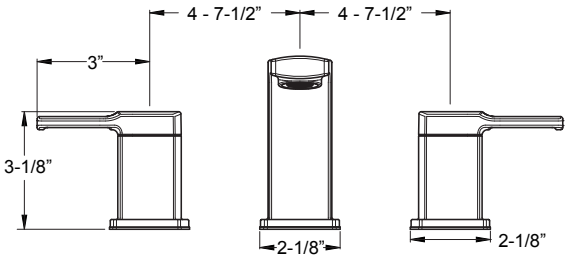

Core Offering · CEC Compliant · Cal Green Compliant · Meets EPA WaterSenseSM Standards · NSF Lead-Free Certified · ADA Compliant · UltraSeal™ · SecurePfit™

1-Hole Roman Tub

	Model	Finish	Case Qty	List Price
★	RT6-1DAC	Polished Chrome	3	$370
★	RT6-1DAK	Brushed Nickel	3	$416
★	RT6-1DAB	Matte Black	3	$463

Technical Info

Holes: · 1-Hole

Features:
- Ceramic Disc Valve
- Metal Lever Handle
- Fixed Spout
- 1/2" NPSM Inlet Lines

Valve Included. No Additional Valving Needed.

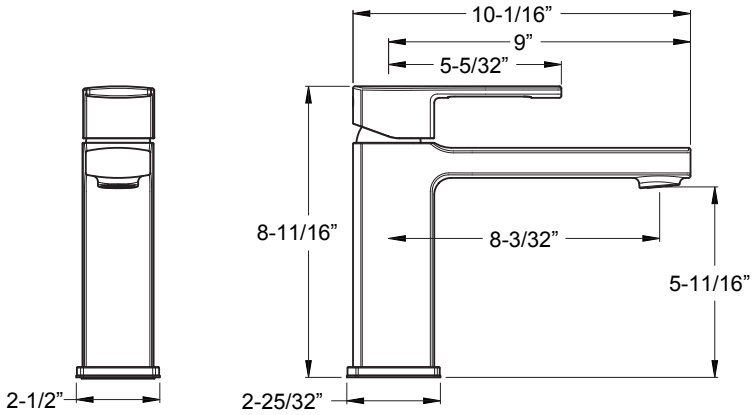

2-Hole Roman Tub

	Model	Finish	Case Qty	List Price
★	RT6-2DAC	Polished Chrome	3	$521
★	RT6-2DAK	Brushed Nickel	3	$578
★	RT6-2DAB	Matte Black	3	$636

Holes: · 2-Hole

Features:
- Ceramic Disc Valve
- Metal Lever Handle
- Fixed Spout
- Handheld Shower
- 1/2" NPSM Inlet Lines
- Hand Shower 1.8 gpm @ 6Ø psi

Valve Included. No Additional Valving Needed.

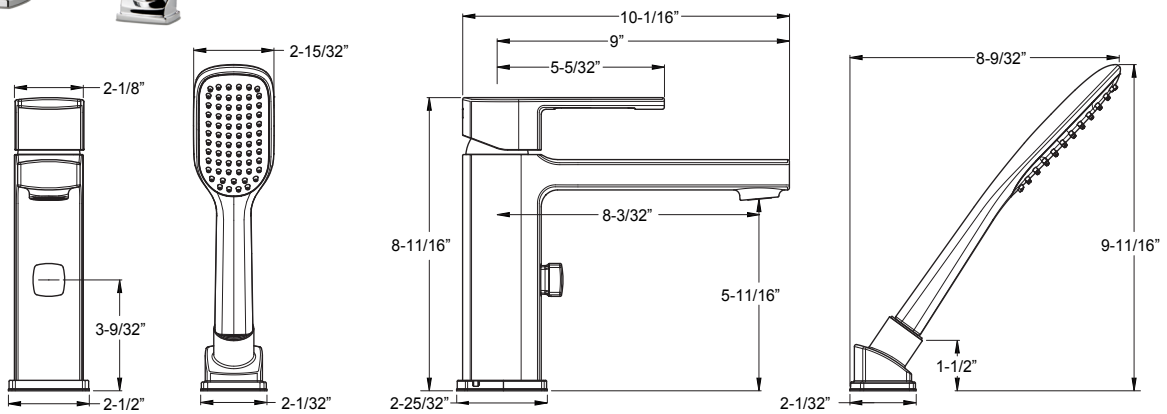

Core Offering · CEC Compliant · Cal Green Compliant · Meets EPA WaterSenseSM Standards · NSF Lead-Free Certified · ADA Compliant · UltraSeal™ · SecurePfit™

	Model	Finish	Case Qty	List Price
3-Hole Roman Tub Trim	★ RT6-5DAC	Polished Chrome	3	$347
	★ RT6-5DAK	Brushed Nickel	3	$393
	★ RT6-5DAB	Matte Black	3	$439

Technical Info

Holes: · 3-Hole

Features:
· Ceramic Disc Valves
· Metal Lever Handles
· Fixed Spout

Must Order ØX6-Ø5ØR or ØX6-15ØR Rough In Valve Separately. See Valve Section.

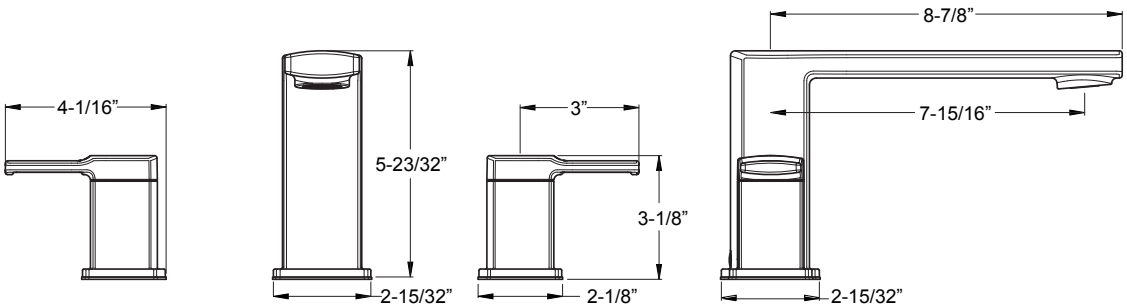

Core Offering · CEC Compliant · Cal Green Compliant · Meets EPA WaterSenseSM Standards · NSF Lead-Free Certified · ADA Compliant · UltraSeal™ · SecurePfit™

Pressure Balance Tub & Shower Trim

	Model	Finish	Case Qty	List Price
★	LG89-8DAC	Polished Chrome	3	$278
★	LG89-8DAK	Brushed Nickel	3	$346
★	LG89-8DAB	Matte Black	3	$416

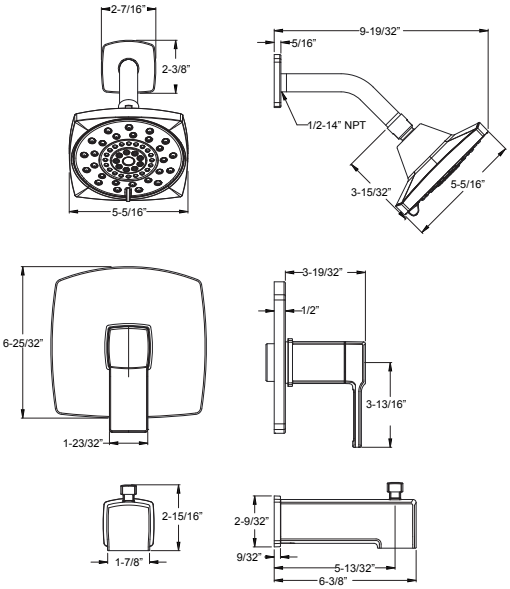

Technical Info

Features:
- SecurePfit™
- Metal Lever Handle
- Hot/Cold Indicator
- Multi-Function Showerhead (3 Functions: Penetrating Massage, Rain Spray, and Invigorating Spray)
- Easy To Clean Spray Nozzles
- IP and Removable Quick Connect Metal Diverter Tub Spout
- Order 941-Ø55 for 1.5 gpm Showerhead Insert
- Showerhead 1.8 gpm @ 8Ø psi

·ØX8/JX8 Rough in value must be ordered seperately see page 46

Pressure Balance Shower Trim

★	LG89-7DAC	Polished Chrome	3	$185
★	LG89-7DAK	Brushed Nickel	3	$231
★	LG89-7DAB	Matte Black	3	$278

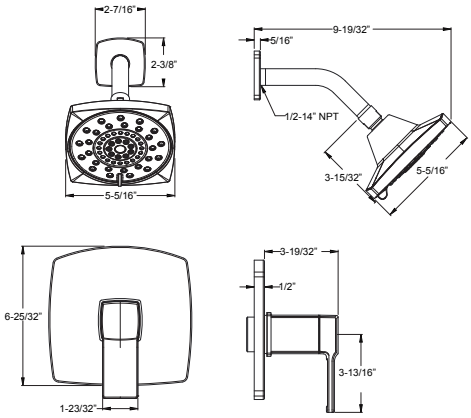

Features:
- SecurePfit™
- Metal Lever Handle
- Hot/Cold Indicator
- Multi-Function Showerhead (3 Functions: Penetrating Massage, Rain Spray, and Invigorating Spray)
- Easy To Clean Spray Nozzles
- Order 941-Ø55 for 1.5 gpm Showerhead Insert
- Showerhead 1.8 gpm @ 8Ø psi

·ØX8/JX8 Rough in value must be ordered seperately see page 46

Core Offering · CEC Compliant · Cal Green Compliant · Meets EPA WaterSenseSM Standards · NSF Lead-Free Certified · ADA Compliant · UltraSeal™ · SecurePfit™

Pressure Balance Valve Only Trim

	Model	Finish	Case Qty	List Price
★	R89-1DAC	Polished Chrome	6	$115
★	R89-1DAK	Brushed Nickel	6	$145
★	R89-1DAB	Matte Black	6	$161

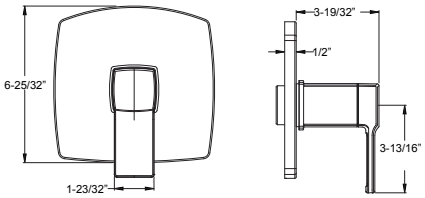

Technical Info

Features:
- SecurePfit™
- Metal Lever Handle
- Hot/Cold Indicator

ØX8-34ØA
ØX8-31ØA

ØX8/JX8 Rough in value must be ordered seperately see page 46

Diverter Trim Only

★	Ø16-DAØC	Polished Chrome	3	$70
★	Ø16-DAØK	Brushed Nickel	3	$86
★	Ø16-DAØB	Matte Black	3	$104

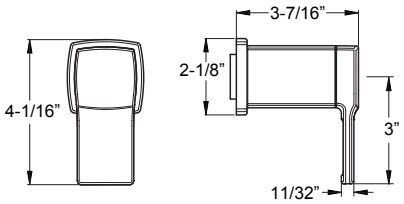

Features:
- SecurePfit™
- Metal Lever Handle and Matching Flange

Must order Ø15-3WDNSS (Non-Shared, Cal Green Compliant) or Ø15-6WDSS (Shared) Stacked Rough-In Valve Separately. See Valve Section.

Stacked Valve Only Trim

★	R89-SDAC	Polished Chrome	6	$308
★	R89-SDAK	Brushed Nickel	6	$345
★	R89-SDAB	Matte Black	6	$378

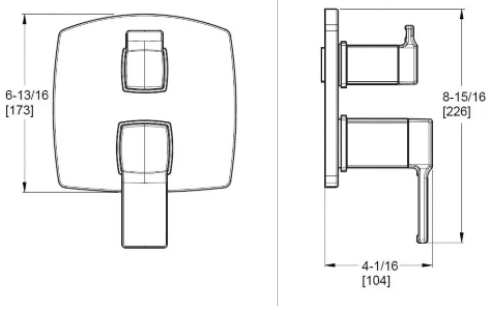

Features:
- SecurePfit™
- Metal Lever Handle
- Hot/Cold Indicator

Must order Ø15-3WDNSS (Non-Shared, Cal Green Compliant) or Ø15-6WDSS (Shared) Stacked Rough-In Valve Separately. See Valve Section.

Core Offering | CEC Compliant | Cal Green Compliant | Meets EPA WaterSenseSM Standards | NSF Lead-Free Certified | ADA Compliant | UltraSeal™ | SecurePfit™

Modern Square 2-Piece Slide Bar

Model	Finish	Case Qty	List Price
HSK-41SHWC	Polished Chrome	3	$373
HSK-41SHWK	Brushed Nickel	3	$474
HSK-41SHWB	Matte Black	3	$490

Technical Info

Features:
- 60" Metal Hose
- Adjustable Heights
- All Metal Construction
- Handheld Shower Not Included
- Mounting Hardware Included
- Optional Flanges Included
- Valve Not Included

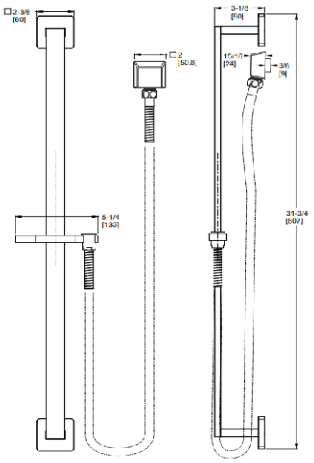

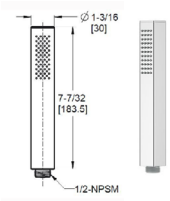

	Model	Finish	Case Qty	List Price
Handshower Wand	HSC-Ø2SHWC	Polished Chrome	1	$147
	HSC-Ø2SHWK	Brushed Nickel	1	$183
	HSC-Ø2SHWB	Matte Black	1	$196

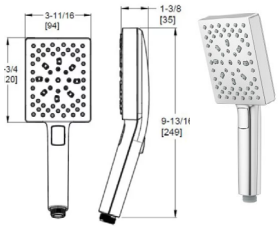

	Model	Finish	Case Qty	List Price
Handshower	HSC-Ø4SHWC	Polished Chrome	1	$176
	HSC-Ø4SHWK	Brushed Nickel	1	$220
	HSC-04SHWSDB	Spot Defense Matte Black	1	$238

Modern Square 2-Piece Handshower Holder Kit

Model	Finish	Case Qty	List Price
HSK-Ø2SHWC	Polished Chrome	3	$166
HSK-Ø2SHWK	Brushed Nickel	3	$259
HSK-Ø2SHWB	Matte Black	3	$265

Features:
- Handheld Shower Sold Separate
- 60" Metal Hose
- All Metal Construction
- Mounting Hardware Included
- Valve Not Included

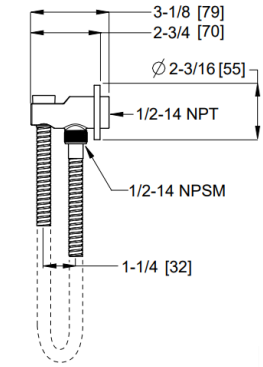

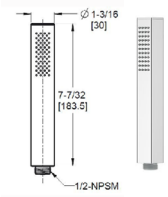

	Model	Finish	Case Qty	List Price
Handshower Wand	HSC-Ø2SHWC	Polished Chrome	1	$147
	HSC-Ø2SHWK	Brushed Nickel	1	$183
	HSC-Ø2SHWB	Matte Black	1	$196

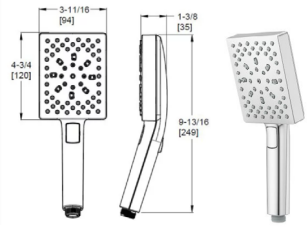

	Model	Finish	Case Qty	List Price
Handshower	HSC-Ø4SHWC	Polished Chrome	1	$176
	HSC-Ø4SHWK	Brushed Nickel	1	$220
	HSC-04SHWSDB	Spot Defense Matte Black	1	$235

Core Offering · CEC Compliant · Cal Green Compliant · Meets EPA WaterSenseSM Standards · NSF Lead-Free Certified · ADA Compliant · UltraSeal™ · SecurePfit™

Shower System

	Model	Finish	Case Qty	List Price
★	LG167-DAC	Polished Chrome	1	$1,086
★	LG167-DAK	Brushed Nickel	1	$1,201
★	LG167-DAB	Matte Black	1	$1,518

Technical Info

Features:
- Matches Deckard family and finishes
- All metal construction

Includes:
14" Straight Arm
· 10" Raincan Showerhead
· Stacked Diverter Trim
· All Metal Slidebar with Hose
· The Slidebar / Handshower Combo
meets ADA requirements
· Multi-Function Hand Shower with Hydrofuse™ technology

Showerhead

★	973-314A	Polished Chrome	1	$48
★	973-314J	Brushed Nickel	1	$67
★	973-314B	Matte Black	1	$88

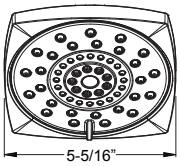

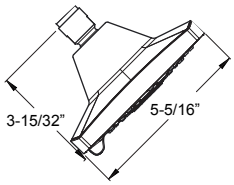

Features:
- Three-Function Showerhead
- 3 Functions:
  - Penetrating Massage
  - Rain Spray
  - Invigorating Spray
- Easy To Clean Spray Nozzles
- Order 941-Ø55 for 1.5 gpm Showerhead Insert
- Showerhead 1.8 gpm @ 80 psi

Modern Square 10" Raincan Showerhead

★	USH-Ø4SHWC	Polished Chrome	1	$44
★	USH-Ø4SHWK	Brushed Nickel	1	$60
★	USH-Ø4SHWB	Matte Black	1	$81

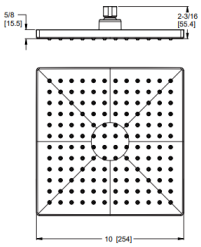

Features:
- All Metal Construction
- Easy To Clean Spray Nozzles
- Shower Arm and Flange Sold Separately

Shower Arm Flange

★	96Ø-331A	Polished Chrome	1	$9
★	96Ø-331J	Brushed Nickel	1	$10
★	96Ø-331B	Matte Black	1	$11

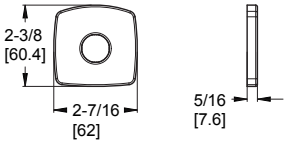

Features:
- All Metal
- Matches Deckard Style & Finishes

Core Offering · CEC Compliant · Cal Green Compliant · Meets EPA WaterSenseSM Standards · NSF Lead-Free Certified · ADA Compliant · UltraSeal™ · SecurePfit™

Straight Shower Arm

★	973-1Ø3A	Polished Chrome	1	$61
★	973-1Ø3J	Brushed Nickel	1	$74
★	973-1Ø3B	Matte Black	1	$135

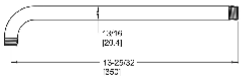

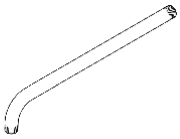

Features:
- All Metal
- Matches Deckard Style & Finishes

Curved Shower Arm

★	973-Ø3ØA	Polished Chrome	1	$20
★	973-Ø3ØJ	Brushed Nickel	1	$46
★	973-Ø3ØB	Matte Black	1	$26

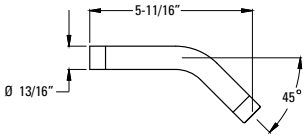

Features:
- Brass Shower Arm
- 1/2" NPT Male Connections

Deckard™ Tub Spout

★	92Ø-2Ø8A	Polished Chrome	1	$109
★	92Ø-2Ø8J	Brushed Nickel	1	$141
★	92Ø-2Ø8B	Matte Black	1	$122

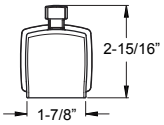

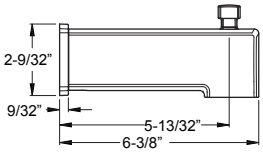

Features:
- All Metal
- IP & Quick Connect Diverter Spout

Square Non-Diverter Tub Spout

★	92Ø-247A	Polished Chrome	10	$99
★	92Ø-247J	Brushed Nickel	10	$137
★	92Ø-247B	Matte Black	10	$149

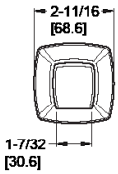

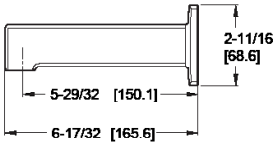

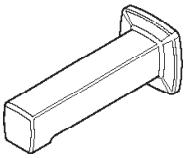

Features:
- All Metal
- Includes copper sweat adapter

Deckard™

Core Offering | CEC Compliant | Cal Green Compliant | Meets EPA WaterSenseSM Standards | NSF Lead-Free Certified | ADA Compliant | UltraSeal™ | SecurePfit™

18" Towel Bar

	Model	Finish	Case Qty	List Price
★	BTB-DA1C	Polished Chrome	3	$63
★	BTB-DA1K	Brushed Nickel	3	$86
★	BTB-DA1B	Matte Black	3	$99

Technical Info

Holes: · 2-Hole

Features:
- All Metal Construction
- Standard Mounting Brackets
- Concealed Screw Installation
- Mounting Hardware Included

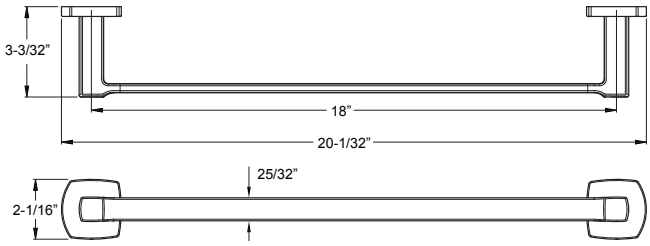

24" Towel Bar

	Model	Finish	Case Qty	List Price
★	BTB-DA2C	Polished Chrome	3	$75
★	BTB-DA2K	Brushed Nickel	3	$99
★	BTB-DA2B	Matte Black	3	$109

Holes: · 2-Hole

Features:
- All Metal Construction
- Standard Mounting Brackets
- Concealed Screw Installation
- Mounting Hardware Included

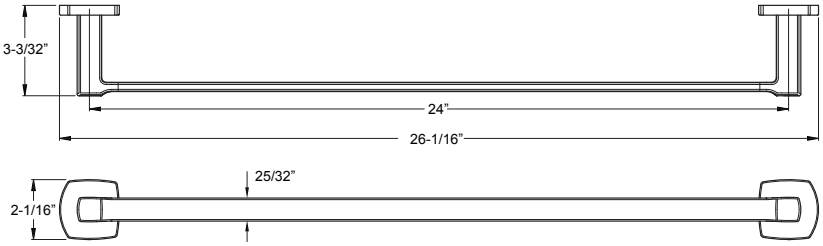

Towel Ring

	Model	Finish	Case Qty	List Price
★	BRB-DA1C	Polished Chrome	8	$51
★	BRB-DA1K	Brushed Nickel	8	$63
★	BRB-DA1B	Matte Black	8	$75

Holes: · 1-Hole

Features:
- All Metal Construction
- Standard Mounting Brackets
- Concealed Screw Installation
- Mounting Hardware Included

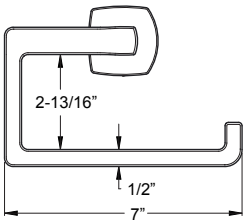

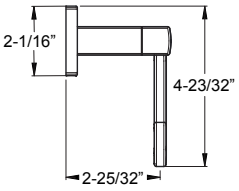

Core Offering · CEC Compliant · Cal Green Compliant · Meets EPA WaterSenseSM Standards · NSF Lead-Free Certified · ADA Compliant · UltraSeal™ · SecurePfit™

Paper Holder

	Model	Finish	Case Qty	List Price
★	BPH-DA1C	Polished Chrome	3	$58
★	BPH-DA1K	Brushed Nickel	3	$75
★	BPH-DA1B	Matte Black	3	$86

Technical Info

Holes: · 2-Hole

Features:
- Swivel Mount Paper Holder
- All Metal Construction
- Standard Mounting Brackets
- Concealed Screw Installation
- Mounting Hardware Included

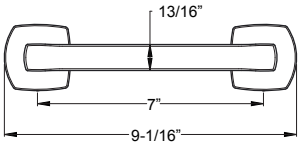

Robe Hook

	Model	Finish	Case Qty	List Price
★	BRH-DA1C	Polished Chrome	12	$23
★	BRH-DA1K	Brushed Nickel	12	$29
★	BRH-DA1B	Matte Black	12	$34

Holes: · 1-Hole

Features:
- All Metal Construction
- Standard Mounting Brackets
- Concealed Screw Installation
- Mounting Hardware Included

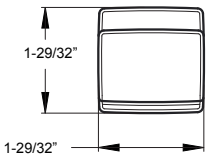

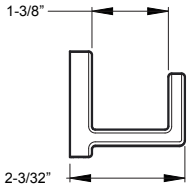

Kenzo

A New Wave of Modern. A bathroom designed with Kenzo water fixtures relaxes your mind and body. The Kenzo collection focuses on the basics: Water experience in its simplest form. Calm lines, and clear function - delivering water in a unique band. A delight for any kind of dwelling.

Single Control Lavatory Faucet

Model	Finish	Case Qty	List Price
LG42-DF1C	Polished Chrome	3	$388
LG42-DF1K	Brushed Nickel	3	$491
LG42-DF1B	Matte Black	3	$664
961-060A	Polished Chrome	1	$27
961-060J	Brushed Nickel	1	$29
961-060B	Matte Black	1	$34

Deckplates

Technical Info

Holes: · 1 or 3-Hole 4" Installation

Features:
- Ceramic Disc Valve
- Metal Lever Handle
- Laminar Flow
- Pfast Connect™
- Single Post Mounting Ring
- 3-Hole Deckplate Included
- All Metal Pop-Up
- Pforever Seal Ceramic Disc Valve
- 1.2 gpm @ 60 psi

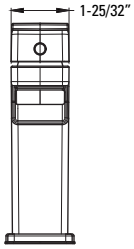

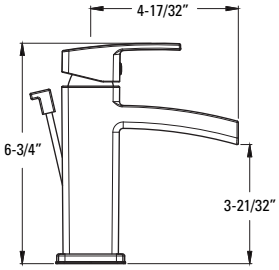

8" Widespread Lavatory

LG49-DF2C	Polished Chrome	3	$454
LG49-DF2K	Brushed Nickel	3	$645
LG49-DF2B	Matte Black	3	$884

Holes: · 3-Hole 8-15" Installation

Features:
- Ceramic Disc Valves
- Metal Lever Handles
- All Metal Pop-Up
- Quick Connect Hose Assembly
- Order 971-Ø86Ø to Increase Max. Install Depth to 3"
- 1.2 gpm @ 60 psi

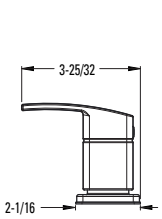

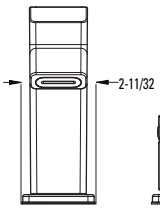

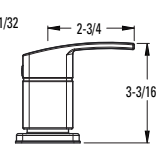

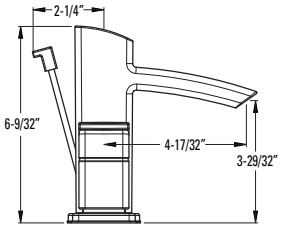

Core Offering · CEC Compliant · Cal Green Compliant · Meets EPA WaterSenseSM Standards · NSF Lead-Free Certified · ADA Compliant · UltraSeal™ · SecurePfit™

8" Wall Mount Lavatory

Model	Finish	Case Qty	List Price
LG49-DF3C	Polished Chrome	3	$470
LG49-DF3K	Brushed Nickel	3	$618
LG49-DF3B	Matte Black	3	$766

Technical Info

Holes: · 3-Hole 8" Installation

Features:
· Ceramic Disc Valves
· Metal Lever Handles
· Grid Strainer Sold Seperately
· 1.2 gpm @ 60 psi

Must Order Wall Mount Rough In Valve Separately.
LØW8-01ØØ
See Valve Section.

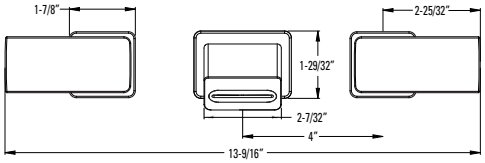

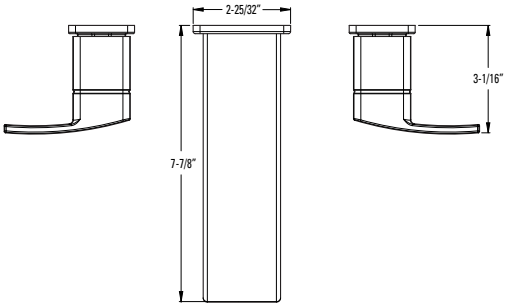

3-Hole Roman Tub Trim

RT6-5D1C	Polished Chrome	3	$670
RT6-5D1K	Brushed Nickel	3	$803
RT6-5D1B	Matte Black	3	$1,010

Holes: · 3-Hole

Features:
· Ceramic Disc Valves
· Metal Lever Handles
· Fixed Spout

Must Order ØX6-Ø5ØR or ØX6-15ØR Rough In Valve Separately. See Valve Section.

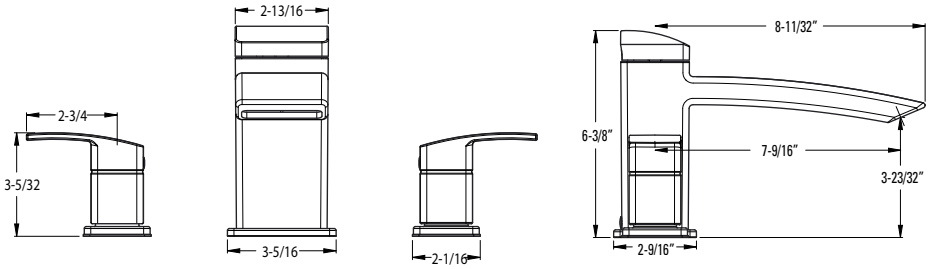

Core Offering · CEC Compliant · Cal Green Compliant · Meets EPA WaterSenseSM Standards · NSF Lead-Free Certified · ADA Compliant · UltraSeal™ · SecurePfit™

How to Order Kenzo Tub & Shower Trim

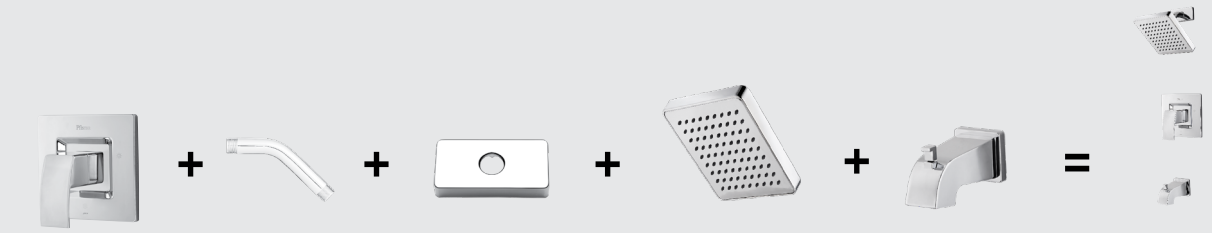

Pressure Balance Valve Only Trim
R89-1DF*

+

Shower Arm
973-Ø3Ø*

+

Flange
96Ø-Ø97*

+

Showerhead
973-288*

+

Tub Spout (Optional)
92Ø-623A*

=

Complete Tub & Shower Trim

Pressure Balance Valve Only Trim

Model	Finish	Case Qty	List Price
R89-1DFC	Polished Chrome	3	$208
R89-1DFK	Brushed Nickel	3	$328
R89-1DFB	Matte Black	3	$337

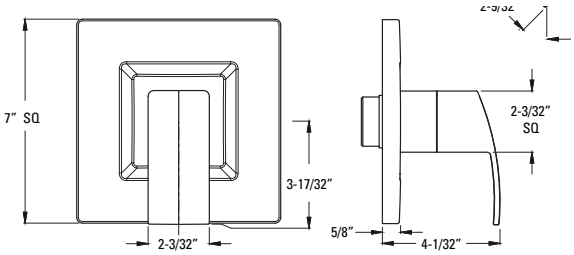

Technical Info

Features:
- SecurePfit™
- Metal Lever Handle
- Hot/Cold Indicator

ØX8-34ØA
ØX8-31ØA
ØX8/JX8 Rough in value must be ordered seperately see page 46

Diverter Trim Only

Ø16-DFØC	Polished Chrome	3	$141
Ø16-DFØK	Brushed Nickel	3	$188
Ø16-DFØB	Matte Black	3	$206

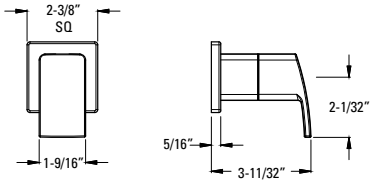

Features:
- SecurePfit™
- Metal Lever Handle and Matching Flange

Must order Ø15-3WDNS (Non-Shared, Cal Green Compliant) or Ø15-6WDS (Shared) Rough-In Valve Separately. See Valve Section.

Core Offering | CEC Compliant | Cal Green Compliant | Meets EPA WaterSenseSM Standards | NSF Lead-Free Certified | ADA Compliant | UltraSeal™ | SecurePfit™

Modern Square Slide Bar

	Model	Finish	Case Qty	List Price
★	HSK-41SHWC	Polished Chrome	3	$373
★	HSK-41SHWK	Brushed Nickel	3	$474
★	HSK-41SHWB	Matte Black	3	$490

Technical Info

Features:
- 60" Metal Hose
- Adjustable Heights
- All Metal Construction
- Handheld Shower Not Included
- Mounting Hardware Included
- Optional Flanges Included
- Valve Not Included

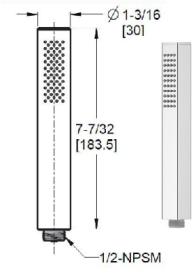

★	Handshower Wand	HSC-Ø2SHWC	Polished Chrome	1	$147
★		HSC-Ø2SHWK	Brushed Nickel	1	$183
★		HSC-Ø2SHWB	Matte Black	1	$196

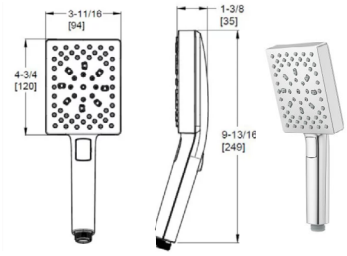

★	Handshower	HSC-Ø4SHWC	Polished Chrome	1	$176
★		HSC-Ø4SHWK	Brushed Nickel	1	$220
★		HSC-04SHWSDB	Spot Defense Matte Black	1	$235

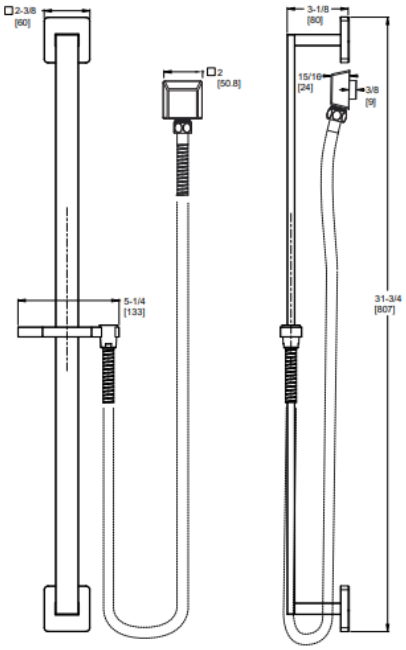

Core Offering | CEC Compliant | Cal Green Compliant | Meets EPA WaterSenseSM Standards | NSF Lead-Free Certified | ADA Compliant | UltraSeal™ | SecurePfit™

	Model	Finish	Case Qty	List Price
Modern Square 2-Piece Handshower Holder Kit	HSK-Ø2SHWC	Polished Chrome	3	$152
	HSK-Ø2SHWK	Brushed Nickel	3	$236
	HSK-Ø2SHWB	Matte Black	3	$242

Technical Info

Features:
- 1.8 GPM Flow Rate
- 60" Metal Hose
- All Metal Construction
- Easy to Clean Nozzles
- Mounting Hardware Included
- Valve Not Included
- Pforever Warranty®

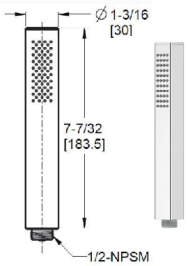

Handshower Wand	HSC-Ø2SHWC	Polished Chrome	1	$147
	HSC-Ø2SHWK	Brushed Nickel	1	$183
	HSC-Ø2SHWB	Matte Black	1	$196

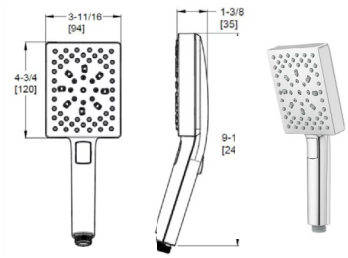

Handshower	HSC-Ø4SHWC	Polished Chrome	1	$176
	HSC-Ø4SHWK	Brushed Nickel	1	$220
	HSC-04SHWSDB	Spot Defense Matte Black	1	$235

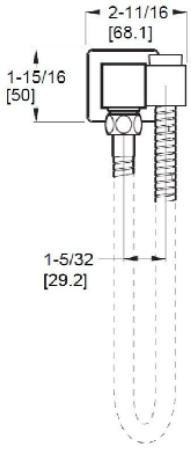

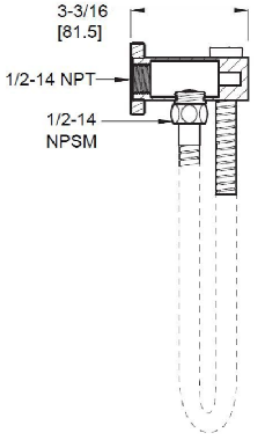

Core Offering · CEC Compliant · Cal Green Compliant · Meets EPA WaterSenseSM Standards · NSF Lead-Free Certified · ADA Compliant · UltraSeal™ · SecurePfit™

Raincan Showerhead

Model	Finish	Case Qty	List Price
★ 973-228A	Polished Chrome	1	$123
★ 973-228J	Brushed Nickel	1	$158
★ 973-228B	Matte Black	1	$223

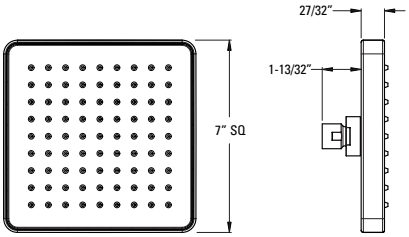

Technical Info

Features:
- Raincan Showerhead
- Easy To Clean Spray Nozzles
- Brass Ball Joint
- Shower Arm and Flange Sold Separately
- Order 941-Ø55Ø for 1.5 gpm Showerhead Insert
- Showerhead 1.8 gpm @ 80 psi

Modern Square 10" Raincan Showerhead

★ USH-Ø4SHWC	Polished Chrome	1	$267
★ USH-Ø4SHWK	Brushed Nickel	1	$297
★ USH-Ø4SHWB	Matte Black	1	$311

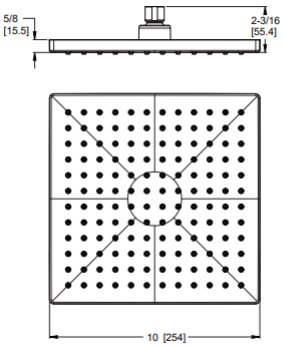

Features:
- Raincan Showerhead
- All Metal Construction
- Easy To Clean Spray Nozzles
- Shower Arm and Flange Sold Separately

Shower Arm Flange

96Ø-Ø97A	Polished Chrome	1	$17
96Ø-Ø97J	Brushed Nickel	1	$23
96Ø-Ø97B	Matte Black	1	$20

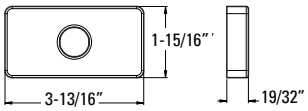

Features:
- All Metal
- Matches Kenzo Style & Finishes

Core Offering | CEC Compliant | Cal Green Compliant | Meets EPA WaterSenseSM Standards | NSF Lead-Free Certified | ADA Compliant | UltraSeal™ | SecurePfit™

Tub Spout

	Model	Finish	Case Qty	List Price
	92Ø-623A	Polished Chrome	1	$86
	92Ø-623J	Brushed Nickel	1	$114
	92Ø-623B	Matte Black	1	$128

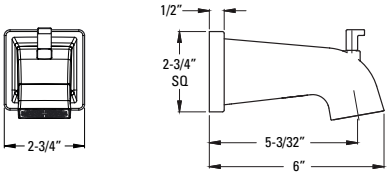

Technical Info

Features:
- All Metal
- IP & Quick Connect Diverted Spout

Straight Shower Arm

	Model	Finish	Case Qty	List Price
★	973-1Ø3A	Polished Chrome	1	$61
★	973-1Ø3J	Brushed Nickel	1	$74
★	973-1Ø3B	Matte Black	1	$135

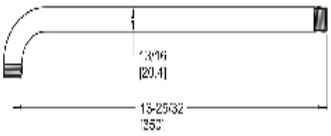

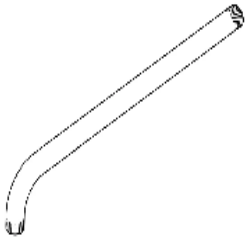

Features:
- All Metal
- Matches Kenzo Style & Finishes

Curved Shower Arm

	Model	Finish	Case Qty	List Price
★	973-Ø3ØA	Polished Chrome	1	$20
★	973-Ø3ØJ	Brushed Nickel	1	$49
★	973-Ø3ØB	Matte Black	1	$26

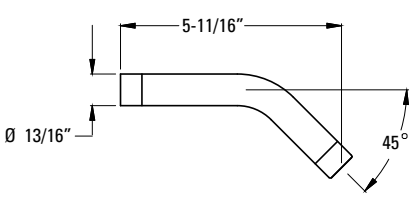

Features:
- Brass Shower Arm
- 1/2" NPT Male Connections

18" Towel Bar

Model	Finish	Case Qty	List Price
BTB-DF1C	Polished Chrome	3	$148
BTB-DF1K	Brushed Nickel	3	$216
BTB-DF1B	Matte Black	3	$225

Technical Info

Holes: · 2-Hole

Features:
· Premium Metal Construction
· Superior Mounting Posts
· Concealed Screw Installation
· Mounting Hardware Included

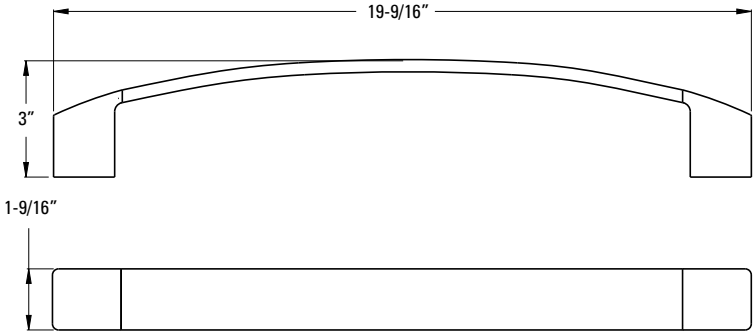

24" Towel Bar

Model	Finish	Case Qty	List Price
BTB-DF2C	Polished Chrome	3	$181
BTB-DF2K	Brushed Nickel	3	$252
BTB-DF2B	Matte Black	3	$259

Holes: · 2-Hole

Features:
· Premium Metal Construction
· Superior Mounting Posts
· Concealed Screw Installation
· Mounting Hardware Included

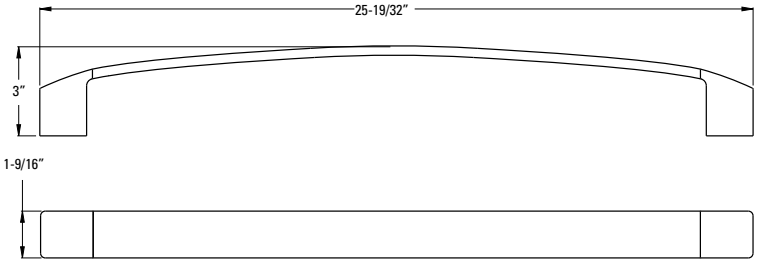

Towel Ring

Model	Finish	Case Qty	List Price
BRB-DF1C	Polished Chrome	3	$137
BRB-DF1K	Brushed Nickel	3	$190
BRB-DF1B	Matte Black	3	$194

Holes: · 2-Hole

Features:
· Premium Metal Construction
· Superior Mounting Posts
· Concealed Screw Installation
· Mounting Hardware Included

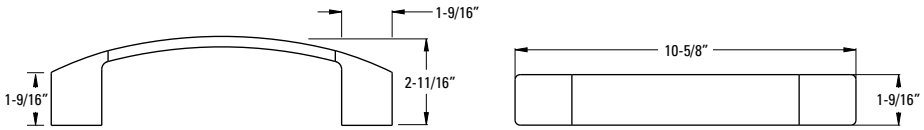

Paper Holder

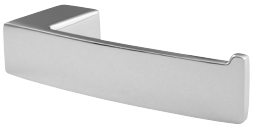

Model	Finish	Case Qty	List Price
BPH-DF1C	Polished Chrome	3	$114
BPH-DF1K	Brushed Nickel	3	$157
BPH-DF1B	Matte Black	3	$164

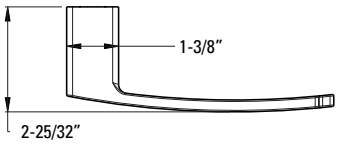

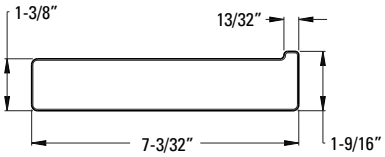

Technical Info

Holes: · 1-Hole

Features:
- Premium Metal Construction
- Superior Mounting Posts
- Concealed Screw Installation
- Mounting Hardware Included

Robe Hook

BRH-DF1C	Polished Chrome	3	$88
BRH-DF1K	Brushed Nickel	3	$123
BRH-DF1B	Matte Black	3	$125

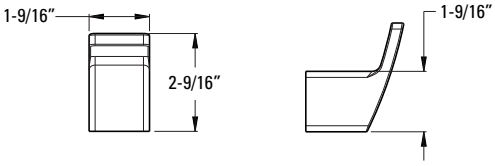

Holes: · 1-Hole

Features:
- Premium Metal Construction
- Superior Mounting Posts
- Concealed Screw Installation
- Mounting Hardware Included

Rhen

FOLDS THAT FLOW WITH THE NATURAL
ELEGANCE OF WATER. RHEN MAKES AN ENTRANCE.

In a world of haste, there is a haven to be found in the graceful folds of Rhen. Hourglass silhouettes echo hand-tailored eveningwear, enchanting from every angle, yet utterly mesmerizing in motion. Inspired by the designer's heirloom wedding gown, the elements of this collection are perfectly imperfect organic pieces that imbue the transitional faucet with a twist of nostalgia.

Single Control Bathroom Faucet

Model	Finish	Case Qty	List Price
LG42-RH2C	Polished Chrome	3	$495
LG42-RH2K	Brushed Nickel	3	$649
LG42-RH2B	Matte Black	3	$691
LG42-RH2BG	Brushed Gold	3	$700

Technical Info

Holes: · 1 or 3-Hole 4" Installation

Features:
· Ceramic Disc Valve
· Metal Lever Handle
· Single Post Mounting Ring
· 3-Hole Deckplate Sold Separately 961-232*
· All Metal Push and Seal
· 1.2 gpm @ 60 psi

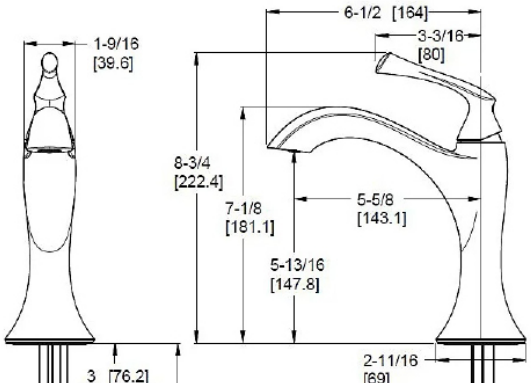

2-Handle 8" Widespread Bathroom Faucet

Model	Finish	Case Qty	List Price
LG49-RH3C	Polished Chrome	3	$655
LG49-RH3K	Brushed Nickel	3	$831
LG49-RH3B	Matte Black	3	$865
LG49-RH3BG	Brushed Gold	3	$906

Holes: · 3-Hole 8-15" Installation

Features:
· Ceramic Disc Valves
· Metal Lever Handles
· All Metal Push and Seal™
· Order 971-Ø26Ø to Increase Max. Install Depth to 3"
· 1.2 gpm @ 60 psi

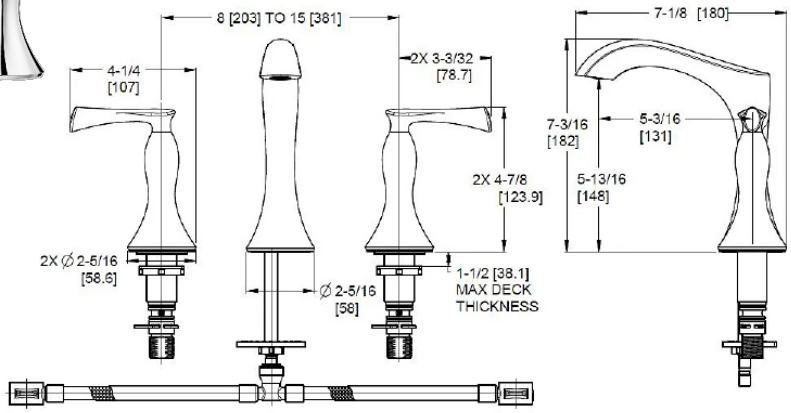

Core Offering · CEC Compliant · Cal Green Compliant · Meets EPA WaterSenseSM Standards · NSF Lead-Free Certified · ADA Compliant · UltraSeal™ · SecurePfit™

2-Handle Wall Mount Bathroom Faucet

Model	Finish	Case Qty	List Price
LG49-RH4C	Polished Chrome	3	$467
LG49-RH4K	Brushed Nickel	3	$552
LG49-RH4B	Matte Black	3	$592
LG49-RH4BG	Brushed Gold	3	$621

Technical Info

Holes:
- 3-Hole 8-15" Installation

Features:
- Ceramic Disc Valves
- Metal Lever Handles
- All Metal Push and Seal™
- Order 971-Ø26Ø to Increase Max. Install Depth to 3"
- 1.2 gpm @ 60 psi

Must Order Valve (L0W80100) Separately

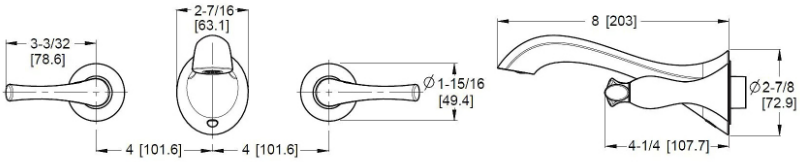

How to Order Rhen Tub & Shower Trim

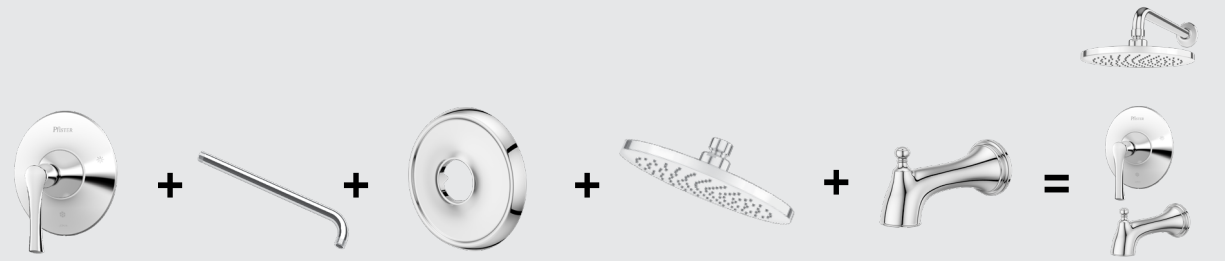

Pressure Balance Valve Only Trim
R89-1RH*

+

Shower Arm
973-1Ø3*

+

Flange
USC-22SHW*

+

Showerhead
USH-Ø1SHW*

+

Tub Spout (Optional)
TBS-Ø3SHW*

=

Complete Tub & Shower Trim

Pressure Balance Valve Only Trim

Model	Finish	Case Qty	List Price
R89-1RHC	Polished Chrome	3	$265
R89-1RHK	Brushed Nickel	3	$342
R89-1RHB	Matte Black	3	$368
R89-1RHBG	Brushed Gold	3	$383

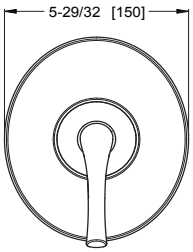

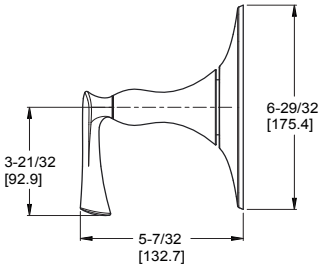

Technical Info

Features:
- SecurePfit™
- Metal Lever Handle
- Hot/Cold Indicator

Must Order Pressure Balance Rough in Valve Separately. See Valve Section.

ØX8-34ØA
ØX8-31ØA

Diverter Trim Only

Ø16-RH1C	Polished Chrome	3	$159
Ø16-RH1K	Brushed Nickel	3	$219
Ø16-RH1B	Matte Black	3	$244
Ø16-RH1BG	Brushed Gold	3	$264

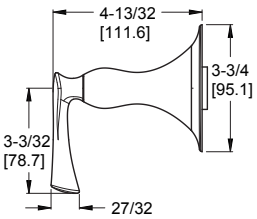

Features:
- Metal Lever Handle and Matching Flange

Must order Ø15-3WDNS (Non-Shared, Cal Green Compliant) or Ø15-6WDS (Shared) Rough-in Valve Separately. See Valve Section)

Core Offering · CEC Compliant · Cal Green Compliant · Meets EPA WaterSenseSM Standards · NSF Lead-Free Certified · ADA Compliant · UltraSeal™ · SecurePfit™

Traditional Tub Spout

Model	Finish	Case Qty	List Price
TBS-Ø3SHWC	Polished Chrome	3	$116
TBS-Ø3SHWK	Brushed Nickel	3	$134
TBS-Ø3SHWB	Matte Black	3	$213
TBS-Ø3SHWBG	Brushed Gold	3	$232

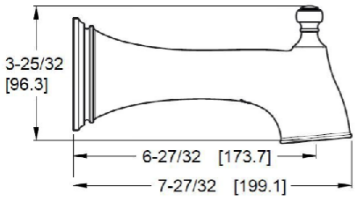

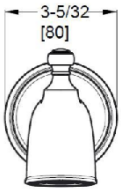

Technical Info

Features:
- SecurePfit™
- Metal Lever Handle
- Hot/Cold Indicator

Must Order Pressure Balance Rough in Valve Separately. See Valve Section.

ØX8-34ØA
ØX8-31ØA

Straight Shower Arm

	Model	Finish	Case Qty	List Price
★	973-1Ø3A	Polished Chrome	1	$61
★	973-1Ø3J	Brushed Nickel	1	$74
★	973-1Ø3B	Matte Black	1	$135
★	973-1Ø3BG	Brushed Gold	1	$165

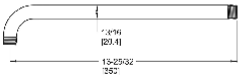

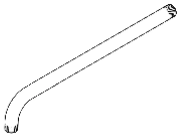

Features:
- All Metal
- Matches Contempra Style & Finishes

Curved Shower Arm

	Model	Finish	Case Qty	List Price
★	973-Ø3ØA	Polished Chrome	1	$20
★	973-Ø3ØJ	Brushed Nickel	1	$46
★	973-Ø3ØB	Matte Black	1	$26
	973-Ø3ØBG	Brushed Gold	1	$38

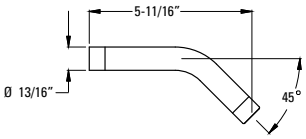

Features:
- Brass Shower Arm
- 1/2" NPT Male Connections

Transitional Round Shower Arm Flange

Model	Finish	Case Qty	List Price
USC-22SHWC	Polished Chrome	24	$9
USC-22SHWK	Brushed Nickel	24	$17
USC-22SHWB	Matte Black	24	$21
USC-22SHWBG	Brushed Gold	24	$28

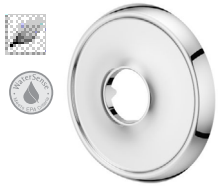

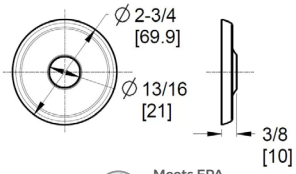

Features:
- Showerarm Flange Only
- Compatible with Standard 1/2" Shower Arms

Core Offering | CEC Compliant | Cal Green Compliant | Meets EPA WaterSenseSM Standards | NSF Lead-Free Certified | ADA Compliant | UltraSeal™ | SecurePfit™

	Model	Finish	Case Qty	List Price
Modern Round™ Slide Bar	HSK-4ØSHWC	Polished Chrome	3	$313
	HSK-4ØSHWK	Brushed Nickel	3	$389
	HSK-40ØSHWBG	Brushed Gold	3	$495
	HSK-4ØSHWB	Matte Black	3	$472

Technical Info

Holes: · 1-Hole Installation

Features:
- Handheld Sold Separately
- 60" Metal Hose
- Adjustable Heights
- Adjustable Cradle
- Includes Mounting Hardware
- Not To Be Used As A Grab Bar

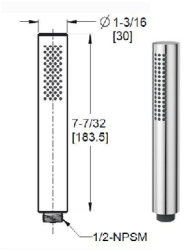

Handshower Wand	HSC-Ø1SHWC	Polished Chrome	1	$132
	HSC-Ø1SHWK	Brushed Nickel	1	$164
	HSC-Ø1SHWBG	Brushed Gold	1	$188
	HSC-Ø1SHWB	Matte Black	1	$177

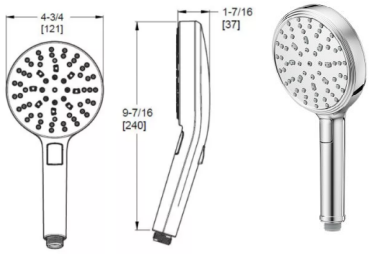

Handshower	HSC-Ø3SHWC	Polished Chrome	1	$148
	HSC-Ø3SHWK	Brushed Nickel	1	$185
	HSC-Ø3SHWSDB	Spot Defense Matte Black	1	$212
	HSC-Ø3SHWBG	Brushed Gold	1	$199

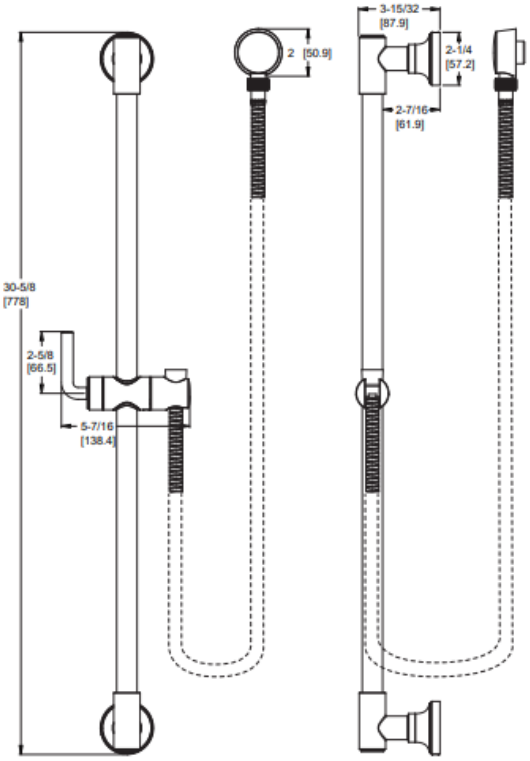

Core Offering · CEC Compliant · Cal Green Compliant · Meets EPA WaterSenseSM Standards · NSF Lead-Free Certified · ADA Compliant · UltraSeal™ · SecurePfit™

Tub Filler with Hand Shower

Model	Finish	Case Qty	List Price
LG6-1RH1C	Polished Chrome	1	$2,141
LG6-1RH1K	Brushed Nickel	1	$2,687
LG6-1RH1B	Matte Black	1	$2,848
LG6-1RH1BG	Brushed Gold	1	$3,018

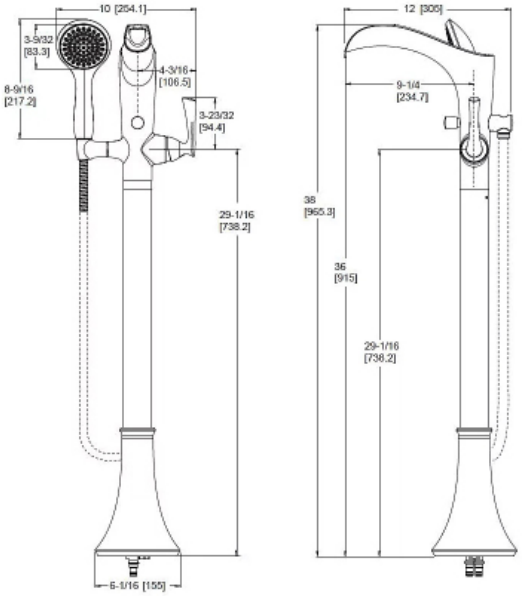

Technical Info

Holes: · 1-Hole Installation

Features:
- Modern Trough Design
- Ceramic Disc Valve
- Metal Lever Handles
- Brass Construction
- 8 gpm @ 60 psi
- Hand Shower 1.8 gpm @ 80 psi

Must Order 0X6270R Free-Standing Rough In Valve Separately

Universal
1-Hole Free-Standing Rough-in Valve

ØX627ØR	N/A	3	$334

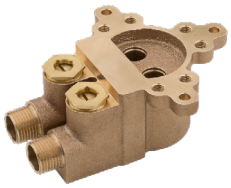

Features:
- All Metal Construction
- Mounting Hardware Included
- All Brass Rough-In Valve Body to be Installed Prior to Finish Floor
- Integral Stops

Core Offering · CEC Compliant · Cal Green Compliant · Meets EPA WaterSenseSM Standards · NSF Lead-Free Certified · ADA Compliant · UltraSeal™ · SecurePfit™

18" Towel Bar

Model	Finish	Case Qty	List Price
BTB-RH1C	Polished Chrome	3	$164
BTB-RH1K	Brushed Nickel	3	$177
BTB-RH1B	Matte Black	3	$192
BTB-RH1BG	Brushed Gold	3	$208

Technical Info

Holes: · 2-Hole

Features:
· Premium Metal Construction
· Superior Mounting Posts
· Concealed Screw Installation
· Mounting Hardware Included

Towel Ring

BRB-RHØC	Polished Chrome	3	$125
BRB-RHØK	Brushed Nickel	3	$139
BRB-RHØB	Matte Black	3	$155
BRB-RHØBG	Brushed Gold	3	$170

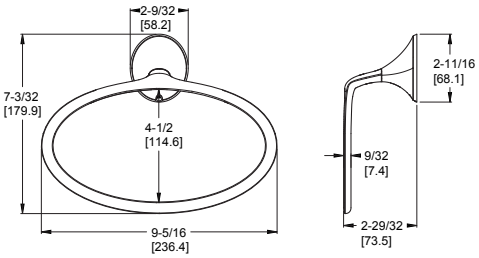

Holes: · 1-Hole

Features:
· Premium Metal Construction
· Superior Mounting Posts
· Concealed Screw Installation
· Mounting Hardware Included

Core Offering · CEC Compliant · Cal Green Compliant · Meets EPA WaterSenseSM Standards · NSF Lead-Free Certified · ADA Compliant · UltraSeal™ · SecurePfit™

Paper Holder

Model	Finish	Case Qty	List Price
BPH-RHØC	Polished Chrome	3	$123
BPH-RHØK	Brushed Nickel	3	$145
BPH-RHØB	Matte Black	3	$161
BPH-RHØBG	Brushed Gold	3	$177

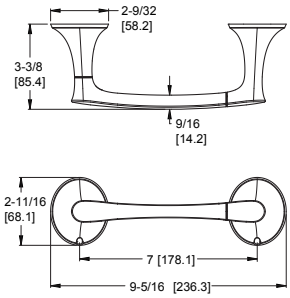

Technical Info

Holes: · 2-Hole

Features:
- Premium Metal Construction
- Pivot Swing Paper Mount
- Concealed Screw Installation
- Mounting Hardware Included

Robe Hook

Model	Finish	Case Qty	List Price
BRH-RHØC	Polished Chrome	3	$84
BRH-RHØK	Brushed Nickel	3	$98
BRH-RHØB	Matte Black	3	$115
BRH-RHØBG	Brushed Gold	3	$129

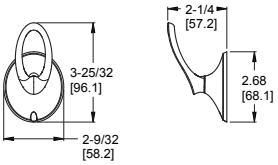

Technical Info

Holes: · 1-Hole

Features:
- Premium Metal Construction
- Superior Mounting Posts
- Concealed Screw Installation
- Mounting Hardware Included

Tenet

TENET

MODERN LIFESTYLE, DISTILLED INTO A SOPHISTICATED COLLECTION.

If you've taken a look around and decided that excess is just that —clarity of purpose comes shining through. The things you choose to adorn your space become carefully cultivated, and not just arbitrary accumulation. This all-brass modern collection is for the true minimalist who values perfect proportion and extremely precise functionality. Faucet levers and cross handles sit tightly flush, a feat of inner engineering that allows for crisp lines and a tidy footprint. The shower-integrated rail has been thoughtfully designed for ease of installation, complementing a 'just right' 8" rain showerhead. Exactly what you need with nothing that you don't, this collection is premium, through and through. The epitome of simplicity, TENET proves what you already know: every detail counts.

Single Control Bathroom Faucet

Model	Finish	Case Qty	List Price
LG42-TNT2C	Polished Chrome	3	$441
LG42-TNT2K	Brushed Nickel	3	$573
LG42-TNT2B	Matte Black	3	$528
LG42-TNT2BG	Brushed Gold	3	$551

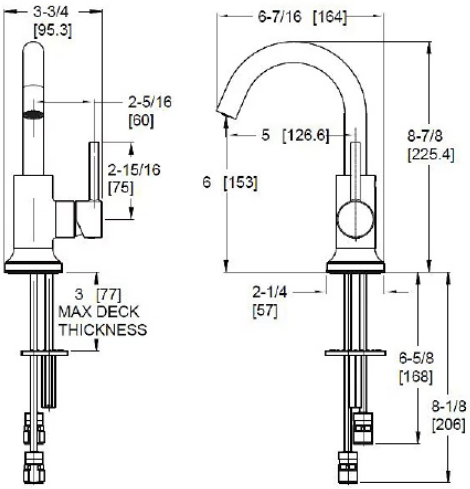

Technical Info

Holes: · 1 or 3-Hole 4" Installation

Features:
- Pforever Seal Ceramic Disc Valve
- Metal Lever Handles
- Pfast Connect™
- 3-Hole Deckplate Sold Separately 961-253*
- 1.2 gpm @ 60 psi

8" Widespread Lavatory

LG49-TNT3C	Polished Chrome	3	$575
LG49-TNT3K	Brushed Nickel	3	$719
LG49-TNT3B	Matte Black	3	$766
LG49-TNT3BG	Brushed Gold	3	$821

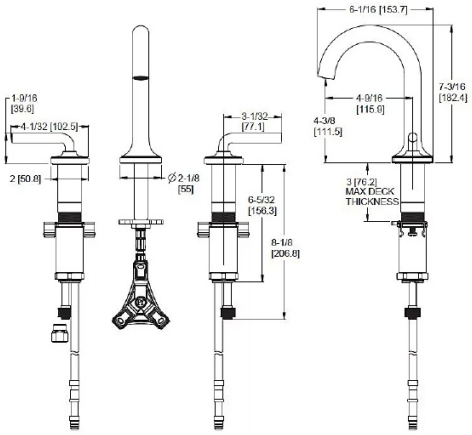

Holes: · 3-Hole 8-15" Installation

Features:
- Pforever Seal Ceramic Disc Valve
- All Metal Construction
- All Metal Pop-Up
- Quick Connect Hose Assembly
- 1.2 gpm @ 60 psi

Core Offering · CEC Compliant · Cal Green Compliant · Meets EPA WaterSenseSM Standards · NSF Lead-Free Certified · ADA Compliant · UltraSeal™ · SecurePfit™

	Model	Finish	Case Qty	List Price
Optional Cross Handle - Widespread	HHL-049TNTC	Polished Chrome	12	$56
	HHL-049TNTK	Brushed Nickel	12	$72
	HHL-049TNTB	Matte Black	12	$72
	HHL-049TNTBG	Brushed Gold	12	$80

Techical Info

Features:
- Easy Install on Tenet Widespread LG49-TNT3*
- Sold as a Pair

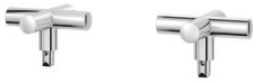

8" Wall Mount Lavatory	LG49-TNT2C	Polished Chrome	3	$514
	LG49-TNT2K	Brushed Nickel	3	$814
	LG49-TNT2B	Matte Black	3	$823
	LG49-TNT2BG	Brushed Gold	3	$838

Holes:
- 3-Hole 8-15" Installation

Features:
- Ceramic Disc Valves
- Metal Lever Handles
- Grid Strainer Sold Seperately
- 1.2 gpm @ 60 psi

Must Order L0W80200 Wall Mount Rough in Valve Separately

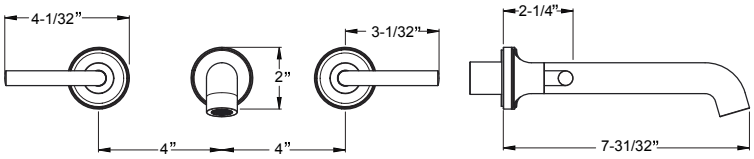

	Model	Finish	Case Qty	List Price
Universal Wall Mount Rough Valve ★	LØW8-Ø2ØØ	N/A	3	$327

Technical Info

Holes:
- 3-Hole 8" Installation

Features:
- Ceramic Disc Valves
- 11/16" Installation Depth Adjustability
- 8" Fixed Body
- 1.2 gpm @ 60 psi

Single Hole Free-Standing Tub Filler with Hand Shower

Model	Finish	Case Qty	List Price
LG6-1TNTC	Polished Chrome	1	$2,736
LG6-1TNTK	Brushed Nickel	1	$3,021
LG6-1TNTB	Matte Black	1	$3,229
LG6-1TNTBG	Brushed Gold	1	$3,476

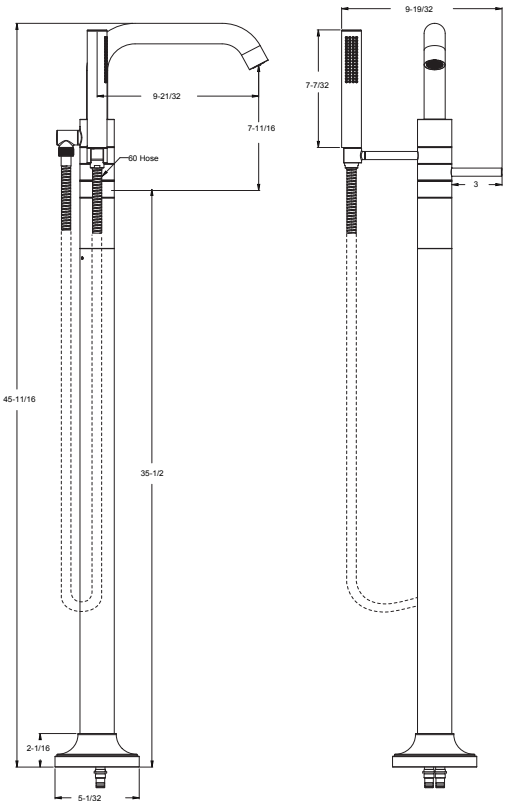

Technical Info

Holes: · 1-Hole Installation

Features:
- Modern Design
- Ceramic Disc Valve
- Metal Lever Handle
- Integrated Handshower Diverter Handle
- Brass Construction
- 6 gpm @ 60 psi
- Hand Shower 1.8 gpm @ 80 psi

Must Order Free-Standing Rough In Valve Separately

Must order Free-Standing Rough In Valve 0X6270R separately"

Universal
1-Hole Free-Standing Rough-in Valve

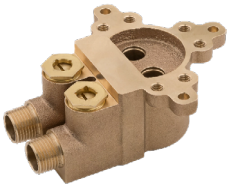

ØX627ØR	N/A	3	$334

Features:
- All Metal Construction
- Mounting Hardware Included
- All Brass Rough-In Valve Body to be Installed Prior to Finish Floor
- Integral Stops

How to Order Tenet Tub & Shower Trim

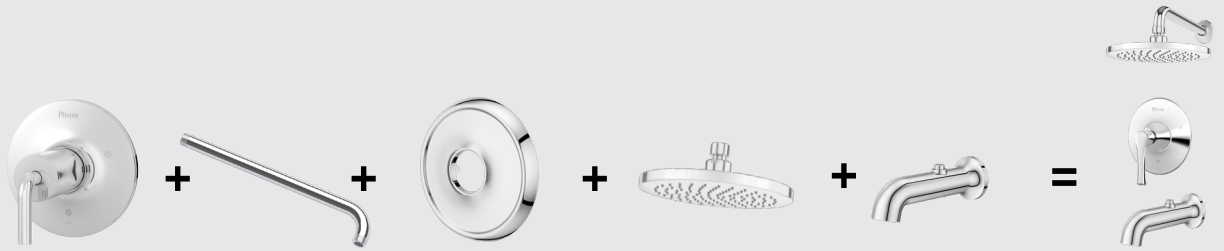

Pressure Balance Valve Only Trim
R89-1TNT*

+

Shower Arm
973-1Ø3*

+

Flange
USC-22SHW*

+

Showerhead
USH-Ø1SHW*

+

Tub Spout (Optional)
TBS-Ø6SHW*

=

Complete Tub & Shower Trim

Pressure Balance Valve Only Trim

Model	Finish	Case Qty	List Price
R89-1TNTC	Polished Chrome	3	$278
R89-1TNTK	Brushed Nickel	3	$356
R89-1TNTB	Matte Black	3	$380
R89-1TNTBG	Brushed Gold	3	$395

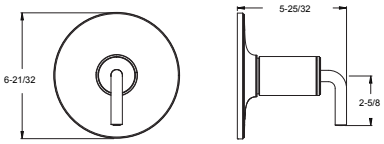

Techincal Info

Features:
- SecurePfit™
- Metal Lever Handle
- Hot/Cold Indicator

Must Order 0X8/JX8 Pressure Balance Rough in Valve Separately. See Valve Section.

Diverter Trim Only

	Ø16-TNT1C	Polished Chrome	3	$166
	Ø16-TNT1K	Brushed Nickel	3	$230
	Ø16-TNT1B	Matte Black	3	$255
	Ø16-TNT1BG	Brushed Gold	3	$278

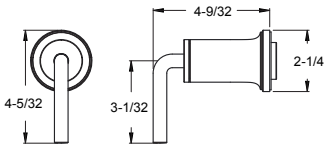

Features:
- SecurePfit™
- Metal Lever Handle and Matching Flange
- Can be Used with Ø15-2WDX for Cal Green Compliant Applications

Must Order Ø15-4WDX or Ø15-2WDX Rough In Valve Separately. See Valve Section.

Straight Shower Arm

★	973-1Ø3A	Polished Chrome	1	$61
★	973-1Ø3J	Brushed Nickel	1	$74
★	973-1Ø3B	Matte Black	1	$135
★	973-1Ø3BG	Brushed Gold	1	$165

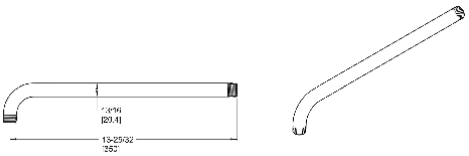

Features:
- All Metal
- Matches Contempra Style & Finishes

Core Offering | CEC Compliant | Cal Green Compliant | Meets EPA WaterSenseSM Standards | NSF Lead-Free Certified | ADA Compliant | UltraSeal™ | SecurePfit™

Curved Shower Arm

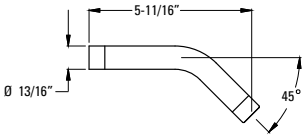

	Model	Finish	Case Qty	List Price
★	973-Ø3ØA	Polished Chrome	1	$18
★	973-Ø3ØJ	Brushed Nickel	1	$42
★	973-Ø3ØB	Matte Black	1	$24
	973-Ø3ØBG	Brushed Gold	1	$38

Technical Info

Features:
- Brass Shower Arm
- 1/2" NPT Male Connections

Transitional Round Shower Arm Flange

USC-22SHWC	Polished Chrome	3	$9
USC-22SHWK	Brushed Nickel	3	$17
USC-22SHWB	Matte Black	3	$21
USC-22SHWBG	Brushed Gold	3	$28

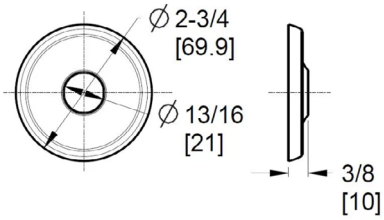

Features:
- Showerarm Flange Only
- Compatible with Standard 1/2" Shower Arms

Modern Round Tubspot with Diverter

TBS-Ø6SHWC	Polished Chrome	3	$190
TBS-Ø6SHWK	Brushed Nickel	3	$236
TBS-Ø6SHWBG	Brushed Gold	3	$271
TBS-Ø6SHWSDB	Spot Defense Matte Black	3	$254

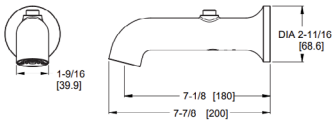

Features:
- Push Button to Divert
- Limited Lifetime Warranty

Tenet™

Core Offering | CEC Compliant | Cal Green Compliant | Meets EPA WaterSenseSM Standards | NSF Lead-Free Certified | ADA Compliant | UltraSeal™ | SecurePfit™

Modern Round Slide Bar

HSK-4ØSHWC	Polished Chrome	3	$313
HSK-4ØSHWK	Brushed Nickel	3	$389
HSK-40ØSHWB	Matte Black	3	$472
HSK-4ØSHWBG	Brushed Gold	3	$495

Holes: · 1-Hole Installation

Features:
- Handheld Sold Separately
- 60" Metal Hose
- Adjustable Heights
- Adjustable Cradle
- Includes Mounting Hardware
- Not To Be Used As A Grab Bar

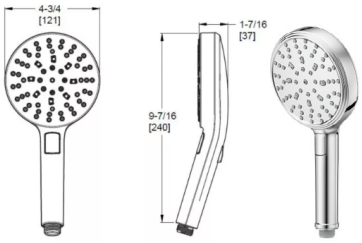

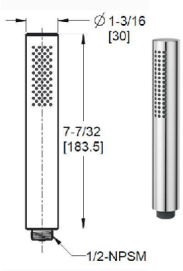

Handshower	HSC-Ø3SHWC	Polished Chrome	1	$148
	HSC-Ø3SHWK	Brushed Nickel	1	$185
	HSC-Ø3SHWSDB	Spot Defense Matte Black	1	$212
	HSC-Ø3SHWBG	Brushed Gold	1	$199

Handshower wand	HSC-Ø1SHWC	Polished Chrome	1	$132
	HSC-Ø1SHWK	Brushed Nickel	1	$164
	HSC-Ø1SHWBG	Brushed Gold	1	$177
	HSC-Ø1SHWB	Matte Black	1	$188

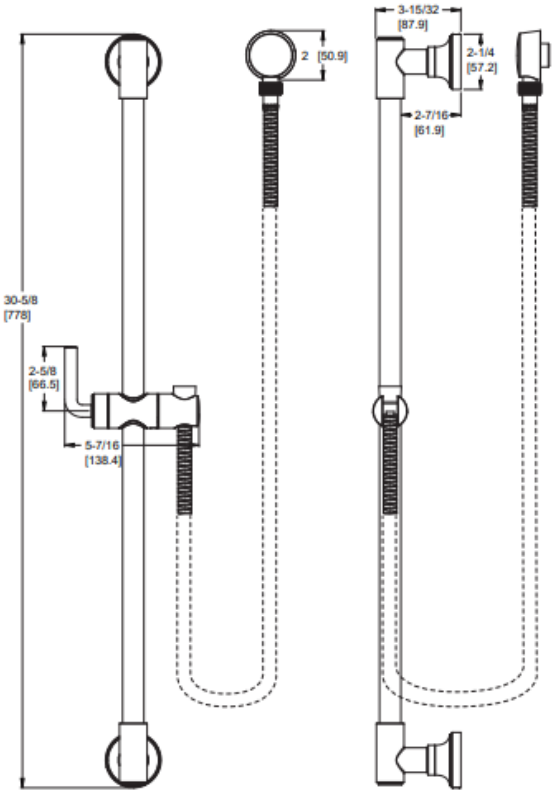

Core Offering · CEC Compliant · Cal Green Compliant · Meets EPA WaterSenseSM Standards · NSF Lead-Free Certified · ADA Compliant · UltraSeal™ · SecurePfit™

Modern Round Shower Column with Handshower

Model	Finish	Case Qty	List Price
HSK-7ØSHWC	Polished Chrome	3	$703
HSK-7ØSHWK	Brushed Nickel	3	$824
HSK-7ØSHWB	Matte Black	3	$902
HSK-7ØSHWBG	Brushed Gold	3	$959

Technical Info

Holes: · 2-Hole Installation

Features: Showerhead Sells Separately
· 1.75 GPM Flow Rate
· 60" Metal Hose
· Adjustable Heights Handheld
· All Metal Construction
· Easy to Clean Nozzles
· Handheld with Integrated Push Button Diverter
· 7/8" Extension Kit Available, Order 931-1599 Separately
· Includes Mounting Hardware

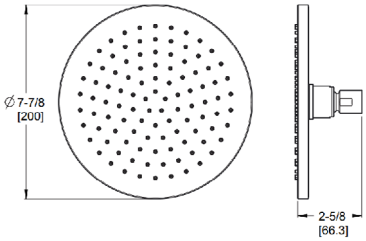

8" Showerhead	USH-Ø1SHWC	Polished Chrome	1	$251
	USH-Ø1SHWK	Brushed Nickel	1	$296
	USH-Ø1SHWB	Matte Black	1	$331
	USH-Ø1SHWBG	Brushed Gold	1	$364

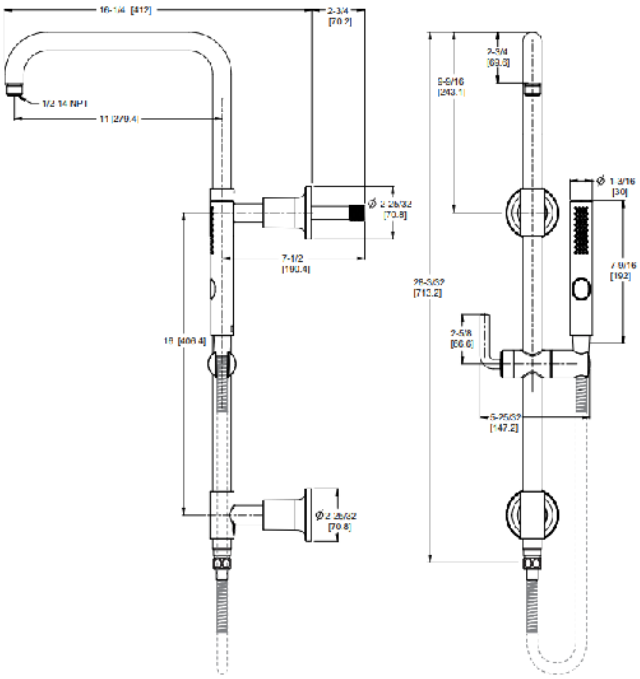

Core Offering · CEC Compliant · Cal Green Compliant · Meets EPA WaterSenseSM Standards · NSF Lead-Free Certified · ADA Compliant · UltraSeal™ · SecurePfit™

8 in. Modern Round Showerhead

	Model	Finish	Case Qty	List Price
★	USH-Ø1SHWC	Polished Chrome	3	$251
	USH-Ø1SHWK	Brushed Nickel	3	$296
★	USH-Ø1SHWB	Matte Black	3	$331
	USH-Ø1SHWBG	Brushed Gold	3	$364

Technical Info

Features: Single Function Rain Showerhead
- 1.75 GPM Flow Rate
- Brass Ball Joint
- Premium Metal Construction
- Wipe Clean Nozzles
- Order 941-055 for 1.5 GPM Flow Rate

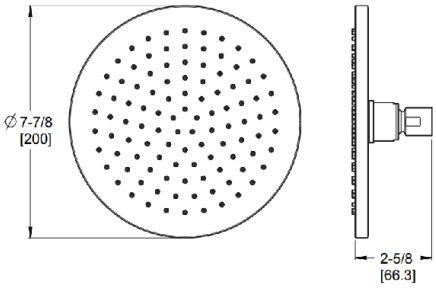

10 in. Modern Round Showerhead

	Model	Finish	Case Qty	List Price
★	USH-Ø3SHWC	Polished Chrome	3	$260
★	USH-Ø3SHWK	Brushed Nickel	3	$291
★	USH-Ø3SHWB	Matte Black	3	$322
★	USH-Ø3SHWBG	Brushed Gold	3	$354

Technical Info

Features:
- All Metal Construction
- Easy To Clean Spray Nozzles
- Shower Arm and Flange Sold Separately

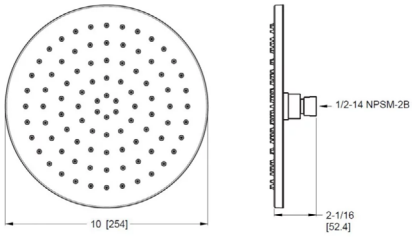

18" Towel Bar

Model	Finish	Case Qty	List Price
BTB-1TNTC	Polished Chrome	6	$171
BTB-1TNTK	Brushed Nickel	6	$185
BTB-1TNTB	Matte Black	6	$202
BTB-1TNTBG	Brushed Gold	6	$216

Technical Info

Holes: · 2-Hole Installation

Features:
· Premium Metal Construction
· Superior Mounting Posts
· Concealed Screw Installation
· Mounting Hardware Included

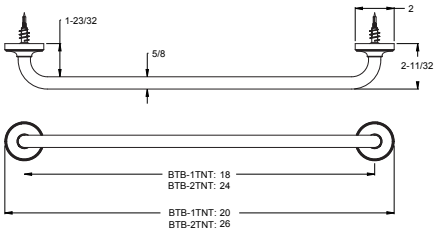

24" Towel Bar

BTB-2TNTC	Polished Chrome	6	$244
BTB-2TNTK	Brushed Nickel	6	$261
BTB-2TNTB	Matte Black	6	$277
BTB-2TNTBG	Brushed Gold	6	$291

Holes: · 2-Hole Installation

Features:
· Premium Metal Construction
· Superior Mounting Posts
· Concealed Screw Installation
· Mounting Hardware Included

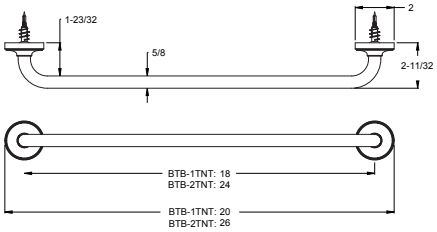

Towel Ring

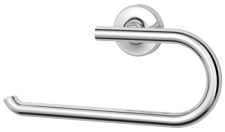

BRB-TNTC	Polished Chrome	8	$130
BRB-TNTK	Brushed Nickel	8	$145
BRB-TNTB	Matte Black	8	$161
BRB-TNTBG	Brushed Gold	8	$177

Holes: · 1-Hole Installation

Features:
· Premium Metal Construction
· Superior Mounting Posts
· Concealed Screw Installation
· Mounting Hardware Included

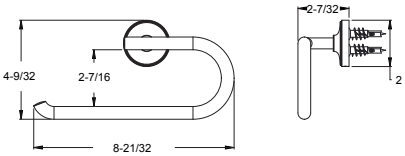

Paper Holder

Model	Finish	Case Qty	List Price
BPH-TNTC	Polished Chrome	8	$127
BPH-TNTK	Brushed Nickel	8	$152
BPH-TNTB	Matte Black	8	$165
BPH-TNTBG	Brushed Gold	8	$181

Technical Info

Holes: · 2-Hole Installation

Features:
· Premium Metal Construction
· Pivot Swing Paper Mount
· Concealed Screw Installation
· Mounting Hardware Included

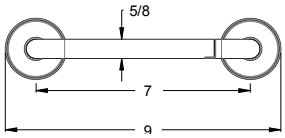

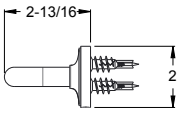

Robe Hook

BRH-TNTC	Polished Chrome	12	$86
BRH-TNTK	Brushed Nickel	12	$101
BRH-TNTB	Matte Black	12	$120
BRH-TNTBG	Brushed Gold	12	$133

Holes: · 1-Hole Installation

Features:
· Premium Metal Construction
· Superior Mounting Posts
· Concealed Screw Installation
· Mounting Hardware Included

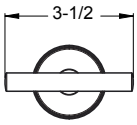

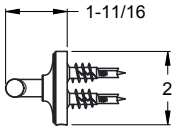

Tisbury

Tisbury is the ultimate classic bath collection. Grace in action, this expansive line of extraordinary fixtures and faucets showcases complementary elements ranging from robe hooks to free-standing tub fillers. Styled with the elegance of golden-era travel, each piece is made of all-brass construction for lasting performance and effortless functionality. The very best of old-world craftsmanship blends with the latest technology to offer you endless customizable combinations.

Single Control Lavatory

Model	Finish	Case Qty	List Price
LG42-TBØC	Polished Chrome	3	$420
LG42-TBØK	Brushed Nickel	3	$568
LG42-TBØD	Polished Nickel	3	$568
LG42-TBØBG	Brushed Gold	3	$612
LG42-TBØSDB	Spot Defense Matte Black	3	$580

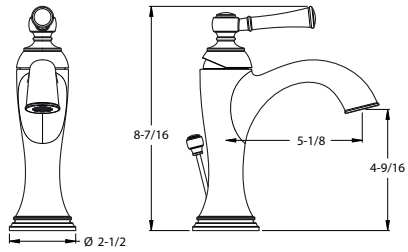

Technical Info

Holes: · 1-Hole Installation

Features:
- Ceramic Disc Valve
- Metal Lever Handle
- Single Post Mounting Ring
- Optional 3-Hole Installation Deck Plate Available, Order 961-223* Separately
- All Metal Pop-Up
- 1.2 gpm @ 60 psi

Deckplates	961-223A	Polished Chrome	1	$23
	961-223J	Brushed Nickel	1	$34
	961-223D	Polished Nickel	1	$30
	961-223BG	Brushed Gold	1	$53

8" Widespread Lavatory

LG49-TBØC	Polished Chrome	3	$578
LG49-TBØK	Brushed Nickel	3	$831
LG49-TBØD	Polished Nickel	3	$831
LG49-TBØBG	Brushed Gold	3	$867
LG49-TBØSDB	Spot Defense Matte Black	3	$843

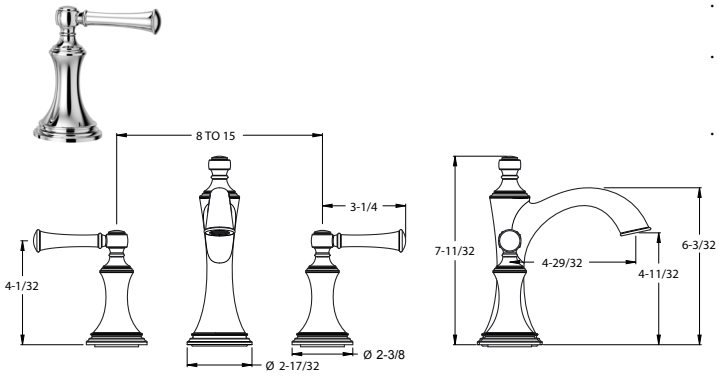

Holes: · 3-Hole 8-15" Installation

Features:
- Ceramic Disc Valves
- Metal Lever Handles
- All Metal Pop-Up
- Quick Connect Hose Assembly
- Order 971-Ø86Ø to Increase Max. Install Depth to 3"
- Optional Cross Handles Available HHL-Ø49TB*
- Both Finished Matched Metal And White Ceramic Hot/Cold Handle Inserts Included
- 1.2 gpm @ 60 psi

Optional Cross Handle - Widespread

HHL-Ø49TBC	Polished Chrome	3	$51
HHL-Ø49TBK	Brushed Nickel	3	$69
HHL-Ø49TBD	Polished Nickel	3	$69
HHL-Ø49TBBG	Brushed Gold	3	$75
HHL-Ø49TBSDB	Spot Defense Matte Black	3	$71

Features:
- Easy Install on Tisbury Widespread LG49TBØ*
- Sold as a Pair

How to Order a Cross Handle Lavatory Faucet

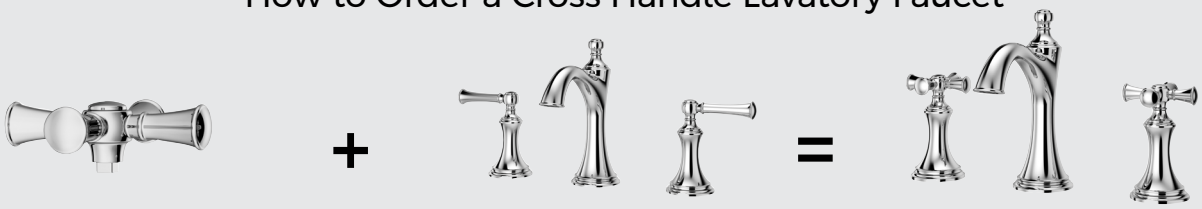

Cross Handle
HHL-Ø49TB*

+

8" Widespread
LG49-TBØ*

=

Complete Faucet

CEC Compliant · Cal Green Compliant · Meets EPA WaterSense℠ Standards · NSF Lead-Free Certified · ADA Compliant · UltraSeal™ · SecurePfit™

CEC Compliant

Cal Green Compliant

Meets EPA WaterSense℠ Standards

NSF Lead-Free Certified

ADA Compliant

UltraSeal™

SecurePfit™

How to Order Tisbury Tub & Shower Trim

Pressure Balance Valve Only Trim
R89-1TNT*

+

Shower Arm
973-1Ø3*

+

Flange
USC-22SHW*

+

Showerhead
USH-Ø1SHW*

+

Tub Spout (Optional)
TBS-Ø6SHW*

=

Complete Tub & Shower Trim

Pressure Balance Valve Only Trim

Model	Finish	Case Qty	List Price
R89-1TBC	Polished Chrome	3	$240
R89-1TBK	Brushed Nickel	3	$326
R89-1TBD	Polished Nickel	3	$329
R89-1TBBG	Brushed Gold	3	$394
R89-1TBSDB	Spot Defense Matte Black	3	$374

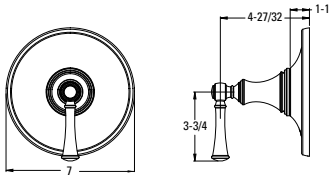

Technical Info

Features:
- Metal Lever Handle
- SecurePfit
- Hot/Cold Indicator
- Optional Cross Handle HHL-Ø89TB*
- Both Finished Matched Metal and Ceramic Caps Included

Pressure Balance Optional Cross Handle - Tub & Shower

HHL-Ø89TBC	Polished Chrome	3	$33
HHL-Ø89TBK	Brushed Nickel	3	$48
HHL-Ø89TBD	Polished Nickel	3	$48
HHL-Ø89TBBG	Brushed Gold	3	$56
HHL-Ø89TBSDB	Spot Defense Matte Black	3	$53

Features:
- Optional Cross Handle
- Easy Install on Tub & Shower Trim, LG89-8TB*, LG89-7TB* and R89-1TB*

How to Order a Cross Handle Shower Trim

Cross Handle
HHL-Ø89TB*

+

Valve Trim
LG89-8TB*
LG89-7TB*
R89-1TB*

=

Complete Pressure Balance Shower Trim

CEC Compliant | Cal Green Compliant | Meets EPA WaterSense℠ Standards | NSF Lead-Free Certified | ADA Compliant | UltraSeal™ | SecurePfit™

Diverter Trim Only

Ø16-TB1C	Polished Chrome	3	$158
Ø16-TB1K	Brushed Nickel	3	$211
Ø16-TB1D	Polished Nickel	3	$211
Ø16-TB1BG	Brushed Gold	3	$276
Ø16-TB1SDB	Spot Defense Matte Black	3	$261

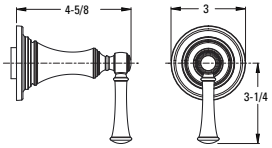

Features:
- SecurePfit™
- Metal Lever Handle and Matching Flange
- Optional Cross Handle HHL-Ø16TB*
- Both Finished Matched Metal and Ceramic Caps Included

Must order Ø15-3WDNS (Non-Shared, Cal Green Compliant) or Ø15-6WDS (Shared) Rough-In Valve Separately. See Valve Section.

Optional Cross Handle - Diverter Trim

HHL-Ø16TBC	Polished Chrome	3	$33
HHL-Ø16TBK	Brushed Nickel	3	$48
HHL-Ø16TBD	Polished Nickel	3	$48
HHL-Ø16TBBG	Brushed Gold	3	$56
HHL-Ø16TBSDB	Spot Defense Matte Black	3	$53

Features:
- Optional Cross Handle
- Easy Install on Diverter Handle, Ø16-TB1*

How to Order a Cross Handle Diverter Trim

Cross Handle
HHL-Ø16TB*

+

Diverter Trim
Ø16-TB1*

=

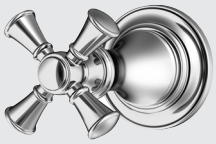

Complete Diverter Trim

CEC Compliant | Cal Green Compliant | Meets EPA WaterSense℠ Standards | NSF Lead-Free Certified | ADA Compliant | UltraSeal™ | SecurePfit™

Transitional Round Slidebar

Model	Finish	Case Qty	List Price
HSK-42SHWC	Polished Chrome	3	$349
HSK-42SHWD	Polished Nickel	3	$499
HSK-42SHWK	Brushed Nickel	3	$499
HSK-42SHWBG	Brushed Gold	3	$586
HSK-42SHWB	Matte Black	3	$495

Technical Info

Features: Handheld Shower Sold Separately
- 60" Metal Hose
- Adjustable Height
- Easy To Clean Nozzles
- Cross Handles Available, HHL-G16-TBX, Order Separately

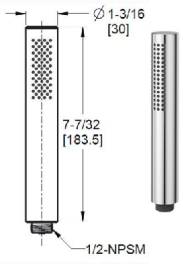

Handshower wand	HSC-Ø1SHWC	Polished Chrome	1	$132
	HSC-Ø1SHWK	Polished Nickel	1	$164
	HSC-Ø1SHWD	Brushed Nickel	1	$164
	HSC-Ø1SHWBG	Brushed Gold	1	$177
	HSC-Ø1SHWB	Matte Black	1	$243

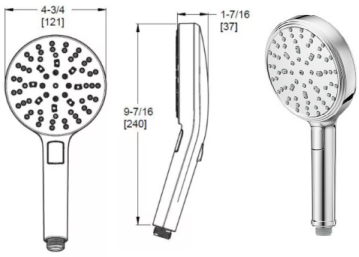

Handshower	HSC-Ø3SHWC	Polished Chrome	1	$148
	HSC-Ø3SHWK	Polished Nickel	1	$185
	HSC-Ø3SHWD	Brushed Nickel	1	$185
	HSC-Ø3SHWBG	Brushed Gold	1	$199
	HSC-Ø3SHWSDB	Spot Defense Matte Black	1	$271

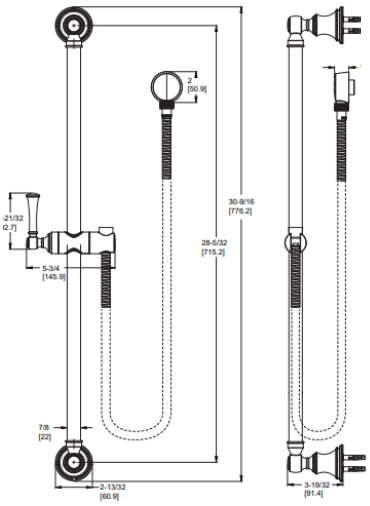

Traditional Tub Spout

TBS-Ø3SHWC	Polished Chrome	1	$116
TBS-Ø3SHWK	Brushed Nickel	1	$134
TBS-Ø3SHWD	Polished Nickel	1	$134
TBS-Ø3SHWBG	Brushed Gold	1	$232
TBS-Ø3SHWB	Matte Black	1	$213

Features:
- All Metal Construction
- Quick Connect
- Diverting Tub Spout
- PVD Finish (K Finish Only)

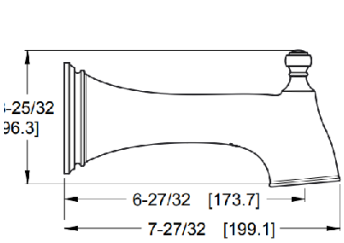

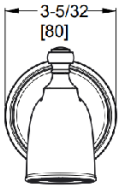

CEC Compliant | Cal Green Compliant | Meets EPA WaterSense℠ Standards | NSF Lead-Free Certified | ADA Compliant | UltraSeal™ | SecurePfit™

Straight Shower Arm

	Model	Finish	Case Qty	List Price
★	973-1Ø3A	Polished Chrome	1	$61
★	973-1Ø3J	Brushed Nickel	1	$74
★	973-1Ø3D	Polished Nickel	1	$148
★	973-1Ø3BG	Brushed Gold	1	$165
★	973-1Ø3B	Matte Black	1	$135

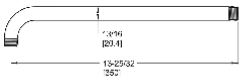

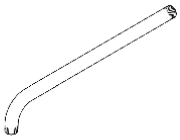

Technical Info

Features:
- All Metal
- Matches Tisbury Style & Finishes

Curved Shower Arm

	Model	Finish	Case Qty	List Price
★	973-Ø3ØA	Polished Chrome	1	$20
★	973-Ø3ØJ	Brushed Nickel	1	$46
	973-Ø3ØD	Polished Nickel	1	$46
	973-Ø3ØBG	Brushed Gold	1	$38
★	973-Ø3ØB	Matte Black	1	$26

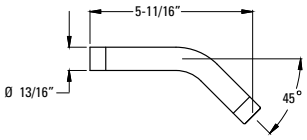

Features:
- Brass Shower Arm
- 1/2" NPT Male Connections

Transitional Round Shower Arm Flange

USC-22SHWC	Polished Chrome	24	$9
USC-22SHWD	Polished Nickel	24	$16
USC-22SHWK	Brushed Nickel	24	$17
USC-22SHWBG	Brushed Gold	24	$28
USC-22SHWB	Matte Black	24	$21

Features:
- Showerarm Flange Only
- Compatible with Standard 1/2" Shower Arms

1-Function Raincan Showerhead

LG15-TBØC	Polished Chrome	1	$145
LG15-TBØK	Brushed Nickel	1	$167
LG15-TBØD	Polished Nickel	1	$167
LG15-TBØBG	Brushed Gold	1	$183
LG15-TBØSDB	Spot Defense Matte Black	1	$158

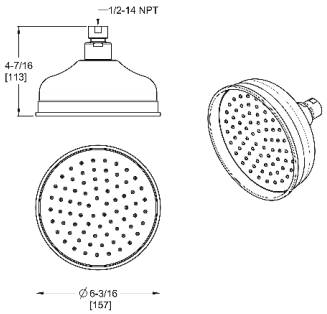

Features:
- Rain spray provides more coverage and a soft, even flow for a relaxing shower experience
- Does not include shower arm, must purchase separately

CEC Compliant | Cal Green Compliant | Meets EPA WaterSense℠ Standards | NSF Lead-Free Certified | ADA Compliant | UltraSeal™ | SecurePfit™

24" Towel Rack

Model	Finish	Case Qty	List Price
BTB-TB3C	Polished Chrome	3	$170
BTB-TB3K	Brushed Nickel	3	$190
BTB-TB3D	Polished Nickel	3	$190
BTB-TB3BG	Brushed Gold	3	$215
BTB-TB3SDB	Spot Defense Matte Black	3	$207

Technical Info

Holes: · 4-Hole Installation

Features:
- Premium Metal Construction
- Superior Mounting Posts
- Concealed Screw Installation
- Mounting Hardware Included
- 2 Hanging Hooks Included
- 75lb. Max. Load

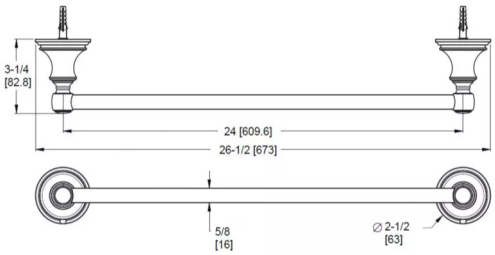

Robe Hook

BRH-TBØC	Polished Chrome	3	$56
BRH-TBØK	Brushed Nickel	3	$64
BRH-TBØD	Polished Nickel	3	$64
BRH-TBØBG	Brushed Gold	3	$77
BRH-TBØSDB	Spot Defense Matte Black	3	$73

Holes: · 1-Hole Installation

Features:
- Premium Metal Construction
- Superior Mounting Posts
- Concealed Screw Installation
- Mounting Hardware Included

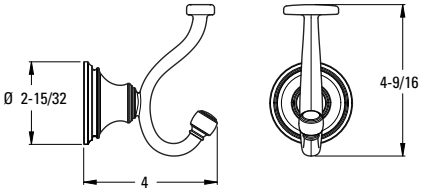

Towel Ring

Model	Finish	Case Qty	List Price
BRB-TBØC	Polished Chrome	3	$111
BRB-TBØK	Brushed Nickel	3	$128
BRB-TBØD	Polished Nickel	3	$127
BRB-TBØBG	Brushed Gold	3	$154
BRB-TBØSDB	Spot Defense Matte Black	3	$146

Technical Info

Holes: · 1-Hole Installation

Features:
· Premium Metal Construction
· Superior Mounting Posts
· Concealed Screw Installation
· Mounting Hardware Included

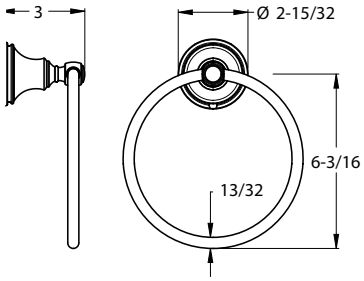

Paper Holder

Model	Finish	Case Qty	List Price
BPH-TBØC	Polished Chrome	3	$111
BPH-TBØK	Brushed Nickel	3	$155
BPH-TBØD	Polished Nickel	3	$154
BPH-TBØBG	Brushed Gold	3	$170
BPH-TBØSDB	Spot Defense Matte Black	3	$160

Holes: · 2-Hole Installation

Features:
· Premium Metal Construction
· Pivot Swing Paper Mount
· Concealed Screw Installation
· Mounting Hardware Included

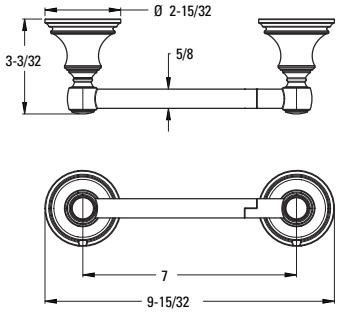

Weller

The Weller line of lavatory fixtures is the new standard for transitional style. With a blend of the best features from both modern and traditional elements, Weller is a complete line of faucets that is refined and well balanced. Gracefully arced spouts and angled handles work together to complement a wide range of décor, making Weller the ideal selection for those who want to update or upgrade their bathroom.

Single Control Lavatory

	Model	Finish	Case Qty	List Price
★	LG42-WRØC	Polished Chrome	3	$204
	LG42-WRØK	Brushed Nickel	3	$239
★	LG42-WRØB	Matte Black	3	$283

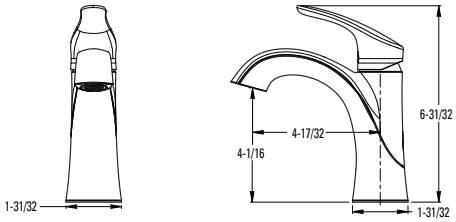

Technical Info

Holes: · 1-Hole Installation

Features:
- Ceramic Disc Valve
- Metal Lever Handle
- High Arc Fixed Spout
- High Temperature Limit Stop
- Optional 3-Hole Installation Deck Plate Available, Must Order Both 961-265* and 974-446* Separately
- Push & Seal Drain Included
- Drilled for Pop Up
- 1.2 gpm @ 60 psi

		Model	Finish	Case Qty	List Price
★	Deckplates	961-265A	Polished Chrome	1	$24
		961-265J	Brushed Nickel	1	$33
★		961-265B	Matte Black	1	$41

4" Centerset Lavatory

★	LG48-WRPC	Polished Chrome	3	$192
	LG48-WRPK	Brushed Nickel	3	$218
★	LG48-WRPB	Matte Black	3	$285

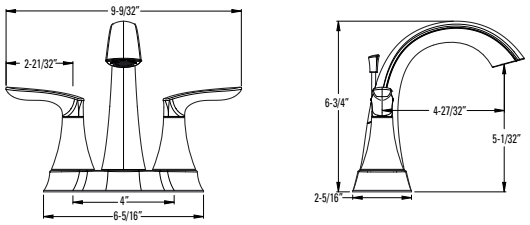

Holes: · 3-Hole 4" Installation

Features:
- Washerless Cartridge
- Metal Lever Handles
- High Arc Fixed Spout
- Push & Seal Drain included
- Washerless Cartridge
- 1.2 gpm @ 60 psi

8" Widespread Lavatory

★	LG49-WRØC	Polished Chrome	3	$289
	LG49-WRØK	Brushed Nickel	3	$381
★	LG49-WRØB	Matte Black	3	$420

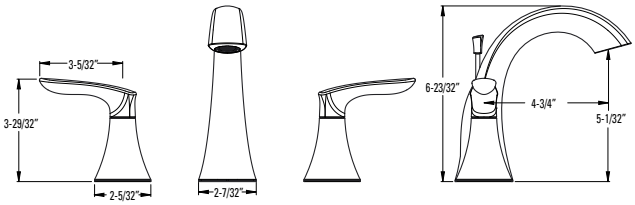

Holes: · 3-Hole 8-15" Installation

Features:
- Ceramic Disc Valves
- Metal Lever Handles
- High Arc Fixed Spout
- Quick Connect Hose Assembly
- Push & Seal Drain included
- Order 971-Ø26Ø to Increase Max. Install Depth to 3"
- 1.2 gpm @ 60 psi

★ Core Offering · CEC Compliant · Cal Green Compliant · Meets EPA WaterSenseSM Standards · NSF Lead-Free Certified · ADA Compliant · UltraSeal™ · SecurePfit™

3-Hole Roman Tub Trim

	Model	Finish	Case Qty	List Price
★	RT6-5WRC	Polished Chrome	3	$309
	RT6-5WRK	Brushed Nickel	3	$373
★	RT6-5WRB	Matte Black	3	$418

Technical Info

Holes: · 3-Hole

Features:
· Ceramic Disc Valves
· Metal Lever Handles
· High Arc Fixed Spout

Must Order ØX6-Ø5ØR or ØX6-15ØR Rough In Valve Separately. See Valve Section.

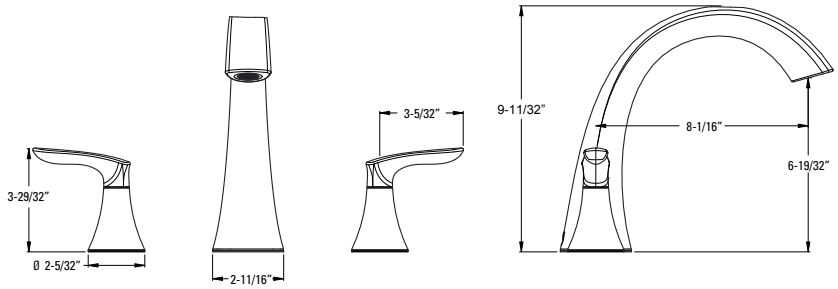

Core Offering · CEC Compliant · Cal Green Compliant · Meets EPA WaterSenseSM Standards · NSF Lead-Free Certified · ADA Compliant · UltraSeal™ · SecurePfit™

Pressure Balance Tub & Shower Trim

	Model	Finish	Case Qty	List Price
★	LG89-8WRC	Polished Chrome	3	$145
	LG89-8WRK	Brushed Nickel	3	$215
★	LG89-8WRB	Matte Black	3	$281

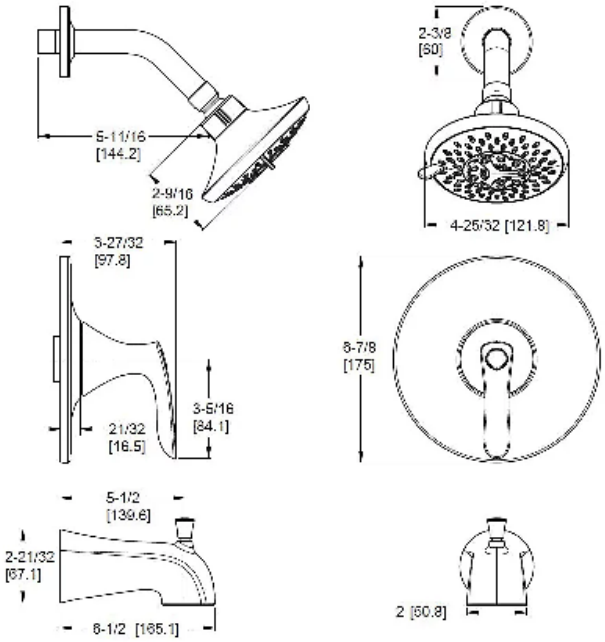

Technical Info

Features:
- Quick Trim™ Wall Flange
- Metal Lever Handle
- Hot/Cold Indicator
- Easy To Clean Spray Nozzles
- IP & Quick Connect Diverted Tub Spout
- Order 941-Ø55 for 1.5 gpm Showerhead Insert
- Showerhead 1.8 gpm @ 80 psi

ØX8/JX8 Rough in value must be ordered seperately see page 46

Pressure Balance Shower Trim

	Model	Finish	Case Qty	List Price
★	LG89-7WRC	Polished Chrome	3	$108
	LG89-7WRK	Brushed Nickel	3	$183
★	LG89-7WRB	Matte Black	3	$232

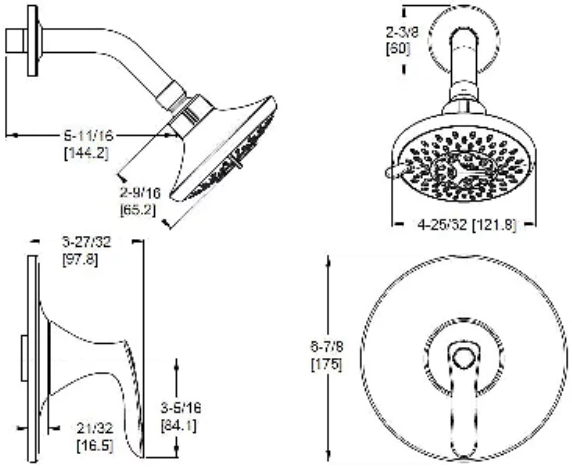

Features:
- Quick Trim™ Wall Flange
- Metal Lever Handle
- Hot/Cold Indicator
- Easy To Clean Spray Nozzles
- Order 941-Ø55 for 1.5 gpm Showerhead Insert
- Showerhead 1.8 gpm @ 80 psi

ØX8/JX8 Rough in value must be ordered seperately see page 46

	Model	Finish	Case Qty	List Price
Pressure Balance Valve Only Trim	★ R89-1WRC	Polished Chrome	3	$79
	R89-1WRK	Brushed Nickel	3	$118
	★ R89-1WRB	Matte Black	3	$164

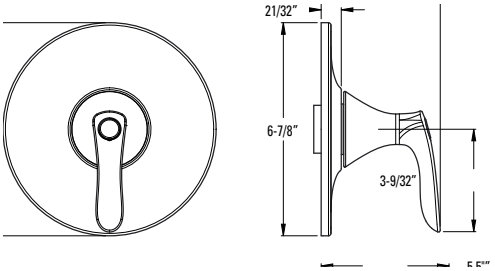

Technical Info

Features:
- Quick Trim™ Wall Flange
- Metal Lever Handle
- Hot/Cold Indicator

ØX8/JX8 Rough in value must be ordered seperately see page 46

Extension Kits

The devil is in the details. We understand that every installation scenario varies from the next. That's why our engineers think of solutions that will make your specific installation a breeze. You're welcome.

Available As Parts	Description	Handle Compatability	Finish	Part No.	List Price
Ø8 Secure Pfit Ext. Kit	For ØX8 Secure Pfit Trims	For Use with ØX8 Requires 1 Kit per Valve Body	Unfinished	97Ø-Ø83Ø	$53
Ø15 Series Ext. Kit	Ø15-XWDX Ext. Kit	For Use with 016 Diverter Trims	Unfinished	97Ø-Ø89Ø	$90
	Both Ø15-3WDNS and Ø15-6WDS	For Use with 016 Diverter Trims	Unfinished	951-3549	
	Ø15-3WDNSS and Ø15-6WDSS	For Use with 016 Stacked Diverter Trims	Unfinished	951-3649	$38
Ø8 & Ø9 Series 1" Ext. Kit	For Single Control Valve Bodies, Pressure Balanced and Mixing, Utilizing Quick Trim System.	For Use with Round Acrylic, Loop, Round Crystal, Cross, Deco Lever and Genesis Lever Handles. Requires One Kit per Valve Body. **Does Not Work with SecurePfit Trims**	Polished Chrome	91Ø-563A	$153
			Brushed Nickel	91Ø-563K	$27
			Matte Black	91Ø-563B	$35
					$62
Ø1 Series 1" Ext. Kit	For Three-Handle Mixing Valve Bodies Utilizing Ceramic Disc Valves Includes Stem Extensions, Sleeve Extensions and Screw Adapters.	For Use with Acrylic Windsor, Metal Verve, Round Acrylic, Deco Lever, French Lever and Cross Handles. Requires One Kit per Valve Body.	Unfinished	91Ø-ØØ5Ø	$75
	For Two or Three-Handle Mixing Valve Bodies Utilizing Compression Valves. Includes Stem Extensions, Sleeve Extensions and Screw Adapters.	For Use with Acrylic Windsor, Metal Verve, Round Acrylic, Deco Lever, French Lever and Cross Handles. Requires One Kit per Handle.	Unfinished	91Ø-862Ø	$27
		For Use with Classic Windsor and Classic Verve Handles. Requires One Kit per Handle.	Unfinished	91Ø-561Ø	$30
Ø3, Ø5 & Ø7 Series 1" Ext. Kit	For Two-Handle Mixing Valve Bodies Utilizing Ceramic Disc Valves. Includes Stem Extensions, Sleeve Extensions, Screw Adapters.	For Use with Acrylic Windsor, Metal Verve, Round Acrylic, Deco Lever, French Lever and Cross Handles. Requires One Kit per Valve Body.	Unfinished	91Ø-ØØ7Ø	$52
	For Two or Three-Handle Mixing Valve Bodies Utilizing Compression Valves. Includes Stem Extensions, Sleeve Extensions and Screw Adapters.	For Use with Acrylic Windsor, Metal Verve, Round Acrylic, Deco Lever, French Lever and Cross Handles. Requires One Kit per Handle.	Unfinished	91Ø-862Ø	$27
	For Two or Three-Handle Mixing Valve Bodies Utilizing Compression Valves. Includes Stem Extensions, Sleeve Extensions and Screw Adapters.	For Use with Classic Windsor and Classic Verve Handles. Requires One Kit per Handle.	Unfinished	91Ø-561Ø	$30
LG6 Tub Filler 4" Ext. Kit	Traditional Tub Filler 4" Ext. Kit	For Use with LG6-1TF* Tub Filler	Polished Chrome	91Ø-Ø62A	$196
			Polished Nickel	91Ø-Ø62D	$231
			Brushed Nickel	91Ø-Ø62J	$231

Showerheads, Handhelds, and Components

Your showerhead does more than deliver water. It also delivers a lot of style. Pfister showerheads are thoughtfully designed with the function you want in a range of styles and finishes to complement your bathroom.

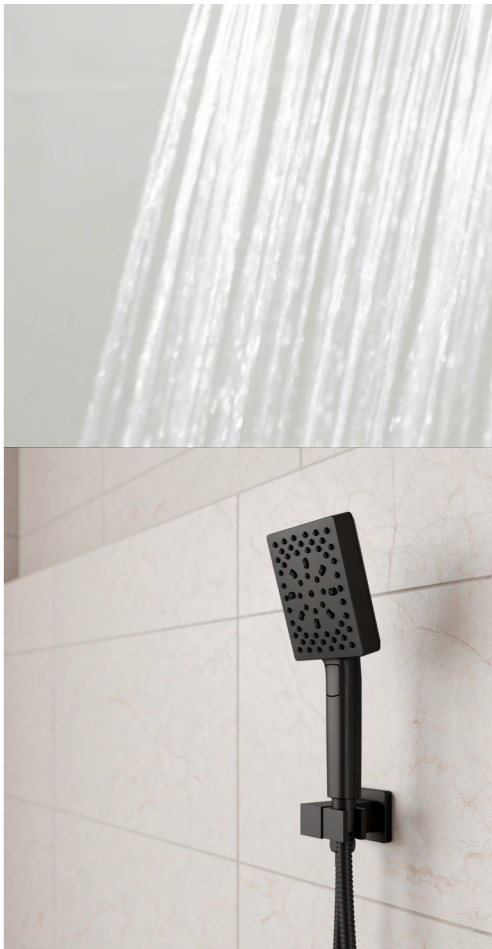

Brislin™ Raincan Showerhead

	Model	Finish	Case Qty	List Price
★	LJ15-BIØC	Polished Chrome	1	$44
	LJ15-BIØK	Brushed Nickel	1	$60
★	LJ15-BIØB	Matte Black	1	$83

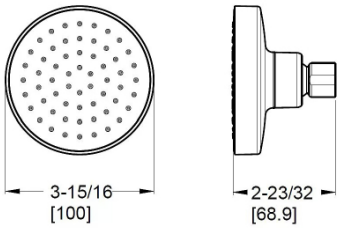

Technical Info

Features:
- Raincan Showerhead
- Easy To Clean Spray Nozzles
- Showerhead 1.75 gpm @ 80 psi

Contempra™ Raincan Showerhead

★	973-312A	Polished Chrome	1	$99
	973-312J	Brushed Nickel	1	$114
★	973-312B	Matte Black	1	$113
	973-312BG	Brushed Gold	1	$201

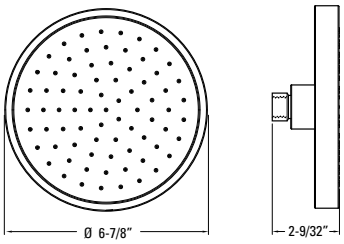

Technical Info

Features:
- Raincan Showerhead
- Easy To Clean Spray Nozzles
- Brass Ball Joint
- Order 941-Ø55Ø for 1.5 gpm Showerhead Insert
- Showerhead 1.8 gpm @ 80 psi

Deckard™ Showerhead

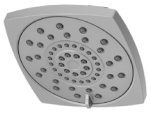

★	973-314A	Polished Chrome	1	$48
★	973-314J	Brushed Nickel	1	$67
★	973-314B	Matte Black	1	$88

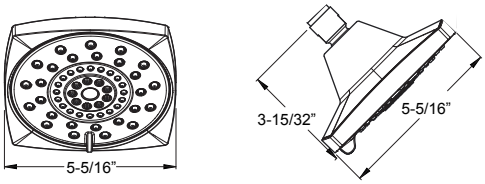

Technical Info

Features:
- Three-Function Showerhead
- 3 Functions:
  - Penetrating Massage
  - Rain Spray
  - Invigorating Spray
- Easy To Clean Spray Nozzles
- Order 941-Ø55 for 1.5 gpm Showerhead Insert
- Showerhead 1.8 gpm @ 80 psi

Showers

Core Offering | CEC Compliant | Cal Green Compliant | Meets EPA WaterSenseSM Standards | NSF Lead-Free Certified | ADA Compliant | UltraSeal™ | SecurePfit™

Kenzo™
Raincan Showerhead

Model	Finish	Case Qty	List Price
973-228A	Polished Chrome	1	$123
973-228J	Brushed Nickel	1	$158
973-228B	Matte Black	1	$223

Technical Info

Features:
- Raincan Showerhead
- Easy To Clean Spray Nozzles
- Shower Arm and Flange Sold Separately
- Order 941-Ø55Ø for 1.5 gpm Showerhead Insert
- Showerhead 1.8 gpm @ 80 psi

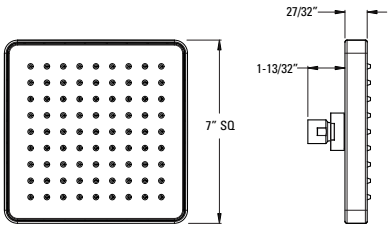

Pfirst Modern™
Showerhead

Model	Finish	Case Qty	List Price
★ LJ15-Ø7ØC	Polished Chrome	1	$35
LJ15-Ø7ØK	Brushed Nickel	1	$50
★ LJ15-Ø7ØB	Matte Black	1	$93

Features:
- Multi Function
- JX = Job Pack Quantity Ships in Master Carton of 12
- Showerhead 1.8 gpm @ 80 psi

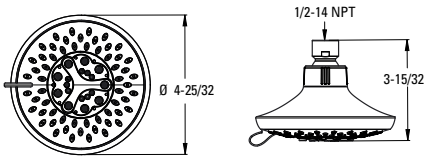

Modern Round™
8 in. Showerhead

Model	Finish	Case Qty	List Price
★ USH-Ø1SHWC	Polished Chrome	1	$251
USH-Ø1SHWK	Brushed Nickel	1	$296
USH-Ø1SHWBG	Brushed Gold	1	$364
★ USH-Ø1SHWB	Matte Black	1	$331

Features:
- Single Function Rain Showerhead
- 1.75 GPM Flow Rate
- Brass Ball Joint
- Premium Metal Construction
- Wipe Clean Nozzles
- Order 941-055 for 1.5 GPM Flow Rate

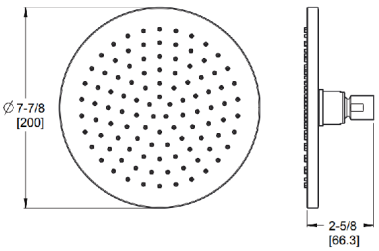

Showers

Core Offering | CEC Compliant | Cal Green Compliant | Meets EPA WaterSenseSM Standards | NSF Lead-Free Certified | ADA Compliant | UltraSeal™ | SecurePfit™

Modern Round™
10 in. Round Showerhead

Model	Finish	Case Qty	List Price
★ USH-Ø3SHWC	Polished Chrome	3	$260
★ USH-Ø3SHWK	Brushed Nickel	3	$291
★ USH-Ø3SHWB	Matte Black	3	$322
★ USH-Ø3SHWBG	Brushed Gold	3	$354

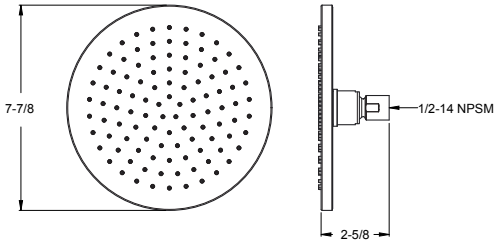

Technical Info

Features:
- All Metal Construction
- Easy To Clean Spray Nozzles
- Shower Arm and Flange Sold Separately

Modern Square™
10 in. Raincan Showerhead

Model	Finish	Case Qty	List Price
★ USH-Ø4SHWC	Polished Chrome	3	$267
★ USH-Ø4SHWK	Brushed Nickel	3	$297
★ USH-Ø4SHWB	Matte Black	3	$302
USH-Ø4SHWBG	Brushed Gold	3	$340

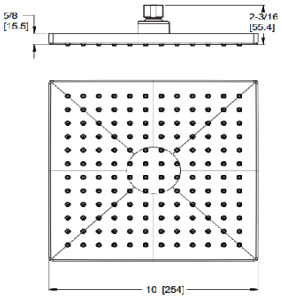

Features:
- All Metal Construction
- Easy To Clean Spray Nozzles
- Shower Arm and Flange Sold Separately

Modern Square™ Slide Bar

	Model	Finish	Case Qty	List Price
★	HSK-41SHWC	Polished Chrome	3	$373
★	HSK-41SHWK	Brushed Nickel	3	$474
★	HSK-41SHWB	Matte Black	3	$490

Technical Info

Features:
- 60" Metal Hose
- Adjustable Heights
- All Metal Construction
- Handheld Shower Not Included
- Mounting Hardware Included
- Optional Flanges Included
- Valve Not Included

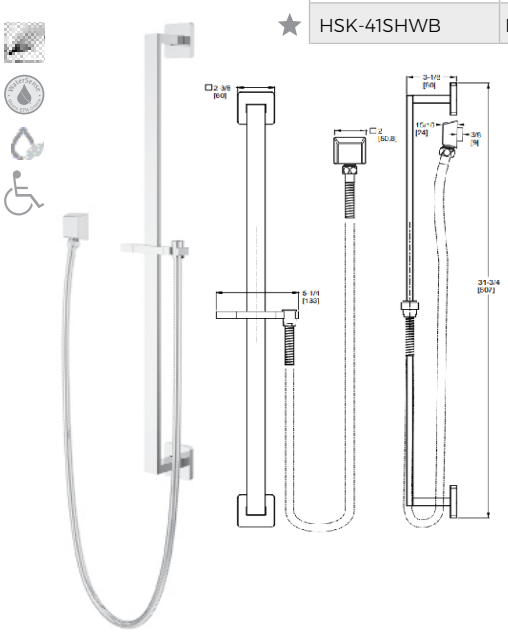

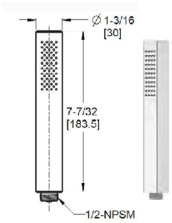

	Handshower Wand			
★	HSC-Ø2SHWC	Polished Chrome	1	$147
★	HSC-Ø2SHWK	Brushed Nickel	1	$183
★	HSC-Ø2SHWB	Matte Black	1	$196

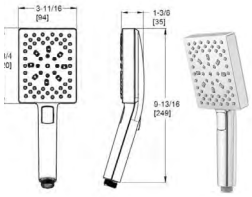

	Handshower			
★	HSC-Ø4SHWC	Polished Chrome	1	$176
★	HSC-Ø4SHWK	Brushed Nickel	1	$220
★	HSC-Ø4SHWSDB	Spot Defense Matte Black	1	$235

Modern Round™ Slide Bar

	Model	Finish	Case Qty	List Price
	HSK-4ØSHWC	Polished Chrome	3	$313
	HSK-4ØSHWK	Brushed Nickel	3	$389
	HSK-40ØSHWBG	Brushed Gold	3	$495
	HSK-4ØSHWB	Matte Black	3	$472

Technical Info

Holes: 1-Hole Installation

Features:
- Handheld Sold Separately
- 60" Metal Hose
- Adjustable Heights
- Adjustable Cradle
- Includes Mounting Hardware
- Not To Be Used As A Grab Bar
- Optional Crosshandle Available,
- Order HHL-G16-TNT* Separately

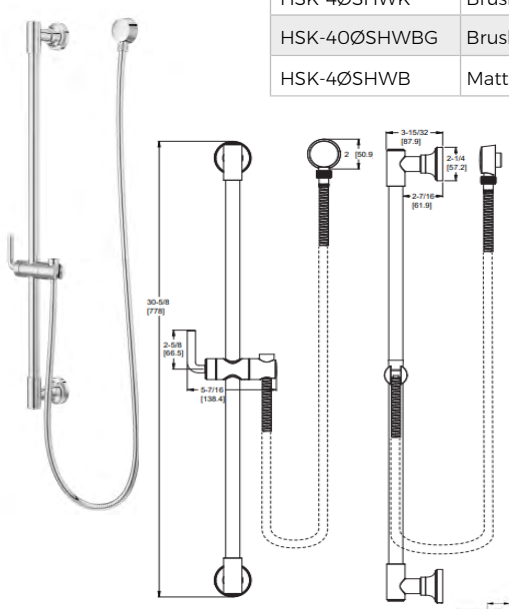

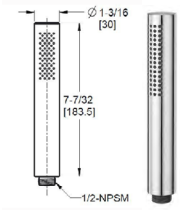

	Handshower Wand			
	HSC-Ø1SHWC	Polished Chrome	1	$132
	HSC-Ø1SHWK	Brushed Nickel	1	$164
	HSC-Ø1SHWBG	Brushed Gold	1	$177
	HSC-Ø1SHWB	Matte Black	1	$188

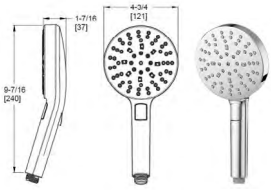

	Handshower			
	HSC-Ø3SHWC	Polished Chrome	1	$148
	HSC-Ø3SHWK	Brushed Nickel	1	$185
	HSC-Ø3SHWSDB	Spot Defense Matte Black	1	$306
	HSC-Ø3SHWBG	Brushed Gold	1	$199

Showers

★ Core Offering · CEC Compliant · Cal Green Compliant · Meets EPA WaterSenseSM Standards · NSF Lead-Free Certified · ADA Compliant · UltraSeal™ · SecurePfit™

Transitional Round Slidebar

Model	Finish	Case Qty	List Price
HSK-42SHWC	Polished Chrome	3	$349
HSK-42SHWD	Polished Nickel	3	$499
HSK-42SHWK	Brushed Nickel	3	$499
HSK-42SHWBG	Brushed Gold	3	$586

Technical Info

Features: Handheld Shower Sold Separately
- 60" Metal Hose
- Adjustable Height
- Easy To Clean Nozzles
- Cross Handles Available, HHL-G16-TBX, Order Separately

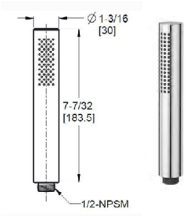

Handshower Wand	HSC-Ø1SHWC	Polished Chrome	1	$132
	HSC-Ø1SHWK	Polished Nickel	1	$164
	HSC-Ø1SHWD	Brushed Nickel	1	$164
	HSC-Ø1SHWBG	Brushed Gold	1	$177

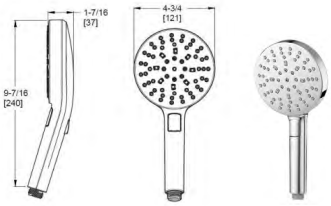

Handshower	HSC-Ø3SHWC	Polished Chrome	1	$148
	HSC-Ø3SHWK	Brushed Nickel	1	$185
	HSC-Ø3SHWD	Polished Nickel	1	$185
	HSC-Ø3SHWBG	Brushed Gold	1	$199

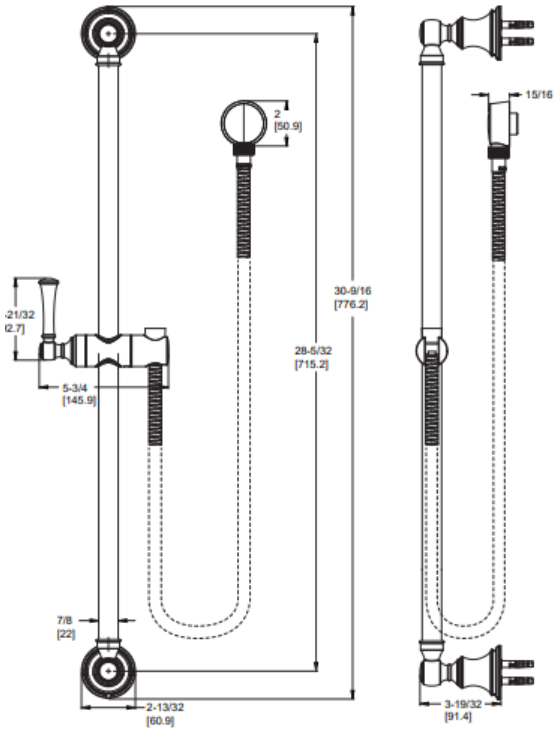

Showers

Core Offering | CEC Compliant | Cal Green Compliant | Meets EPA WaterSenseSM Standards | NSF Lead-Free Certified | ADA Compliant | UltraSeal™ | SecurePfit™

Slide Bar Package

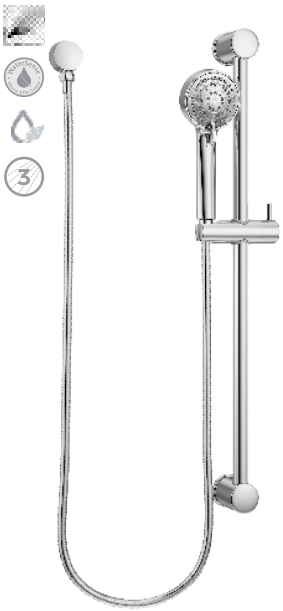

	Model	Finish	Case Qty	List Price
★	LG16-5ØØC	Polished Chrome	6	$307
★	LG16-5ØØK	Brushed Nickel	6	$458
	LG16-5ØØD	Polished Nickel	6	$564
★	LG16-5ØØB	Matte Black	6	$546
★	LG16-5ØØBG	Brushed Gold	6	$572

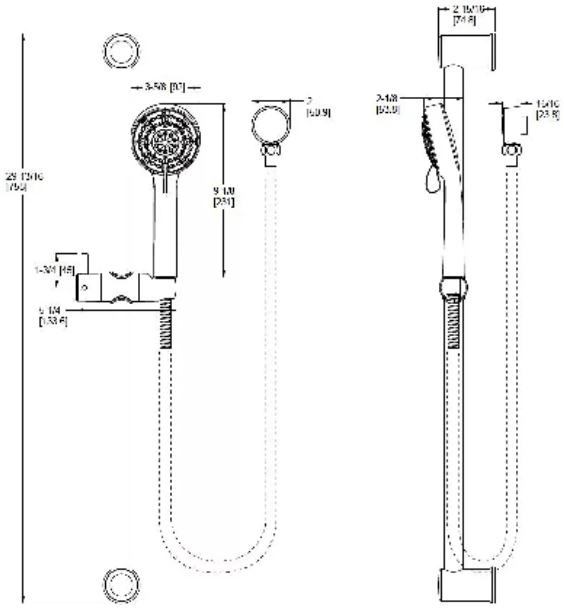

Technical Info

Features:

- Complete Slide Bar Package with Hand Shower, Hose, Drop Elbow, and Slide Bar
- Metal Slide Bar
- Easy To Clean Spray Nozzles
- 60" Metal Hose with Matching Finish
- Functions: Penetrating Massage, Rain Spray and Invigorating Spray
- Multifunction handheld shower gives you three unique spray functions and a pause (Non Positive Shutoff) feature
- Pause function temporarily reduces water flow to less than 0.5 gpm
- Not to be Used as a Grab Bar
- Hand Shower 1.8 gpm @ 80 psi

Modern Round 2-Piece Handshower Kit

	Model	Finish	Case Qty	List
★	HSK-Ø1SHWC	Polished Chrome	3	$226
	HSK-Ø1SHWK	Brushed Nickel	3	$338
★	HSK-Ø1SHWB	Matte Black	3	$365
	HSK-Ø1SHWBG	Brushed Gold	3	$381

Technical Info

Features:
- Handheld Shower Sold Separately
- 60" Metal Hose
- All Metal Construction
- Valve Not Included

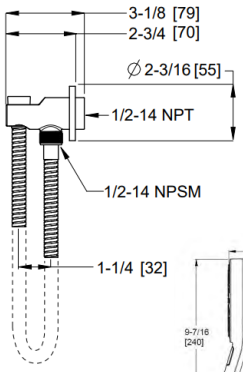

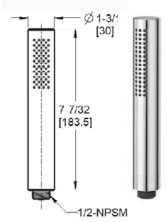

★	Handshower Wand	HSC-Ø1SHWC	Polished Chrome	1	$132
		HSC-Ø1SHWK	Brushed Nickel	1	$164
★		HSC-Ø1SHWB	Matte Black	1	$188
		HSC-Ø1SHWBG	Brushed Gold	1	$177

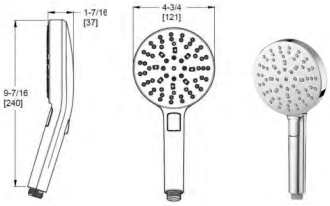

Handshower	HSC-Ø3SHWC	Polished Chrome	1	$148
	HSC-Ø3SHWK	Brushed Nickel	1	$185
	HSC-Ø3SHWBG	Brushed Gold	1	$199
	HSC-Ø3SHWSDB	Spot Defense Matte Black	1	$212

Modern Square 2-Piece Handshower Holder Kit

★	HSK-Ø2SHWC	Polished Chrome	3	$166
★	HSK-Ø2SHWK	Brushed Nickel	3	$259
★	HSK-Ø2SHWB	Matte Black	3	$265

Features:
- Handheld Shower Sold Separately
- 60" Metal Hose
- All Metal Construction
- Mounting Hardware Included
- Valve Not Included

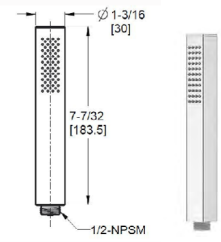

★	Handshower Wand	HSC-Ø2SHWC	Polished Chrome	1	$147
★		HSC-Ø2SHWK	Brushed Nickel	1	$183
★		HSC-Ø2SHWB	Matte Black	1	$196

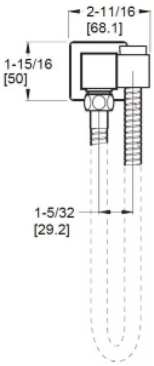

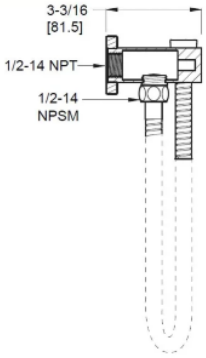

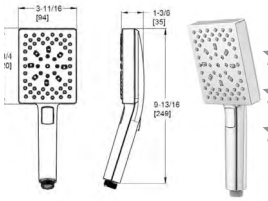

★	Handshower	HSC-Ø4SHWC	Polished Chrome	1	$176
★		HSC-Ø4SHWK	Brushed Nickel	1	$220
★		HSC-Ø3SHWSDB	Spot Defense Matte Black	1	$235

Core Offering · CEC Compliant · Cal Green Compliant · Meets EPA WaterSenseSM Standards · NSF Lead-Free Certified · ADA Compliant · UltraSeal™ · SecurePfit™

Ceiling Mount Shower Arm

Model	Finish	Case Qty	List Price
USC-Ø5SHWC	Polished Chrome	1	$42
USC-Ø5SHWK	Brushed Nickel	1	$76
USC-Ø5SHWBG	Brushed Gold	1	$111
USC-Ø5SHWB	Matte Black	1	$99

Technical Info

Features:
- 6" Straight Shower Arm
- 1/2"-14 NPT Thread Size

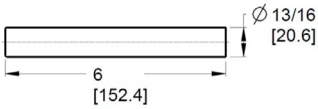

Straight Shower Arm

	Model	Finish	Case Qty	List Price
★	973-1Ø3A	Polished Chrome	1	$61
★	973-1Ø3J	Brushed Nickel	1	$74
	973-1Ø3D	Polished Nickel	1	$148
★	973-1Ø3B	Matte Black	1	$135
★	973-1Ø3BG	Brushed Gold	1	$165

Features:
- 13 11/16" Length
- Brass Shower Arm
- 1/2" NPT Male Connections

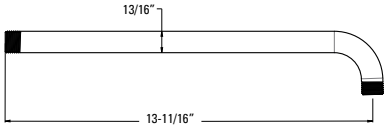

Curved Shower Arm

	Model	Finish	Case Qty	List Price
★	973-Ø3ØA	Polished Chrome	1	$20
★	973-Ø3ØJ	Brushed Nickel	1	$46
	973-Ø3ØD	Polished Nickel	1	$46
★	973-Ø3ØB	Matte Black	1	$26
	973-Ø3ØBG	Brushed Gold	1	$38

Features:
- 5 11/16' Length
- Brass Shower Arm
- 1/2" NPT Male Connections

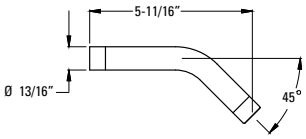

Modern Round Shower Arm Flange

	Model	Finish	Case Qty	List Price
★	USC-20SHWC	Polished Chrome	1	$19
★	USC-20SHWK	Brushed Nickel	1	$26
★	USC-20SHWB	Matte Black	1	$20
★	USC-20SHWBG	Brushed Gold	1	$23

Features:
- All Metal
- Matches Contempra Style & Finishes

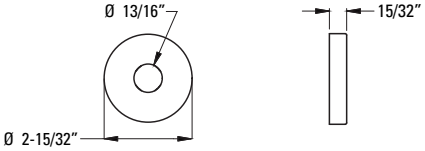

★ Core Offering · CEC Compliant · Cal Green Compliant · Meets EPA WaterSenseSM Standards · NSF Lead-Free Certified · ADA Compliant · UltraSeal™ · SecurePfit™

Showers

Deckard™ Shower Arm Flange

	Model	Finish	Case Qty	List Price
★	96Ø-331A	Polished Chrome	1	$9
★	96Ø-331J	Brushed Nickel	1	$10
★	96Ø-331B	Matte Black	1	$11

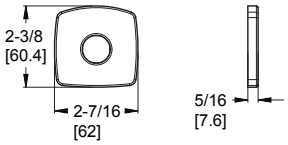

Technical Info

Features:
- All Metal
- Matches Deckard Style & Finishes

Transitional Round Shower Arm Flange

USC-22SHWC	Polished Chrome	24	$9
USC-22SHWD	Polished Nickel	24	$16
USC-22SHWK	Brushed Nickel	24	$17
USC-22SHWBG	Brushed Gold	24	$28
USC-22SHWB	Matte Black	24	$21

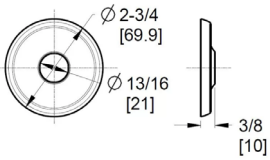

Features:
- Showerarm Flange Only
- Compatible with Standard 1/2" Shower Arms

Contempra® Stacked Pressure Balance Valve Only Trim

★	R89-SNCC	Polished Chrome	6	$231
★	R89-SNCK	Brushed Nickel	6	$259
★	R89-SNCB	Matte Black	6	$285
★	R89-SNCBG	Brushed Gold	6	$295

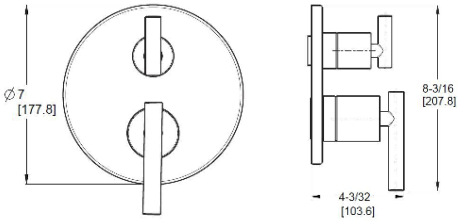

Features:
- SecurePfit™
- Metal Lever Handle
- Hot/Cold Indicator

Must order Ø15-3WDNS (Non-Shared, Cal Green Compliant) or Ø15-6WDS (Shared) Stacked Rough-In Valve Separately. See Valve Section.

Contempra® Diverter Trim

★	Ø16-NC1C	Polished Chrome	3	$103
★	Ø16-NC1K	Brushed Nickel	3	$136
★	Ø16-NC1B	Matte Black	3	$135
★	Ø16-NC1BG	Brushed Gold	3	$163

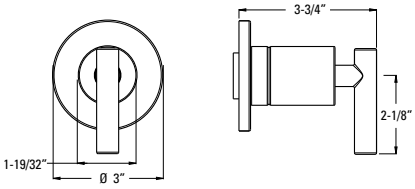

Features:
- SecurePfit™
- Metal Lever Handle and Matching Flange

Showers

Core Offering | CEC Compliant | Cal Green Compliant | Meets EPA WaterSenseSM Standards | NSF Lead-Free Certified | ADA Compliant | UltraSeal™ | SecurePfit™

Deckard™ Diverter Trim

Model	Finish	Case Qty	List Price
Ø16-DAØC	Polished Chrome	3	$70
Ø16-DAØK	Brushed Nickel	3	$86
Ø16-DAØB	Matte Black	3	$104

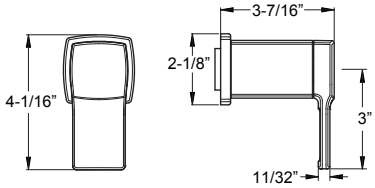

Features:
- SecurePfit™
- Metal Lever Handle and Matching Flange

Deckard™ Stacked Diverter Trim Only

Model	Finish	Case Qty	List Price
R89-SDAC	Polished Chrome	6	$308
R89-SDAK	Brushed Nickel	6	$345
R89-SDAB	Matte Black	6	$378

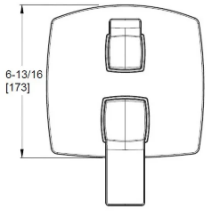

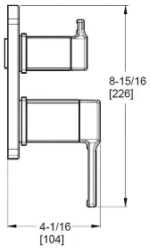

Features:
- SecurePfit™
- Metal Lever Handle
- Hot/Cold Indicator

Must order Ø15-3WDNS (Non-Shared, Cal Green Compliant) or Ø15-6WDS (Shared) Stacked Rough-In Valve Separately. See Valve Section.

Kenzo™ Diverter Trim

Ø16-DFØC	Polished Chrome	3	$141
Ø16-DFØK	Brushed Nickel	3	$188
Ø16-DFØB	Matte Black	3	$206

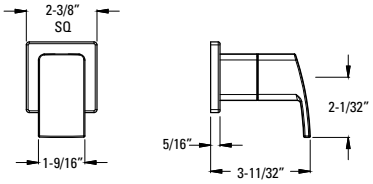

Features:
- SecurePfit™
- Metal Lever Handle and Matching Flange
- Can be used with Ø15-2WDX or Ø15-3WDNS for Cal Green Compliance

Must order Ø15-3WDNS (Non-Shared, Cal Green Compliant) or Ø15-6WDS (Shared) Rough-In Valve Separately. See Valve Section.

Rhen™ Diverter Trim

Ø16-RH1C	Polished Chrome	3	$159
Ø16-RH1K	Brushed Nickel	3	$219
Ø16-RH1B	Matte Black	3	$244
Ø16-RH1BG	Brushed Gold	3	$264

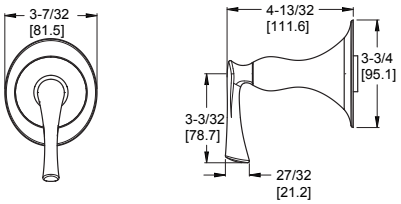

Features:
- SecurePfit™
- Metal Lever Handle and Matching Flange
- Can be used with Ø15-2WDX or Ø15-3WDNS for Cal Green Compliance

Must order Ø15-3WDNS (Non-Shared, Cal Green Compliant) or Ø15-6WDS (Shared) Rough-In Valve Separately. See Valve Section.

Showers

Core Offering | CEC Compliant | Cal Green Compliant | Meets EPA WaterSenseSM Standards | NSF Lead-Free Certified | ADA Compliant | UltraSeal™ | SecurePfit™

Tenet™ Diverter Trim

Model	Finish	Case Qty	List Price
Ø16-TNT1C	Polished Chrome	3	$166
Ø16-TNT1K	Brushed Nickel	3	$230
Ø16-TNT1B	Matte Black	3	$255
Ø16-TNT1BG	Brushed Gold	3	$278

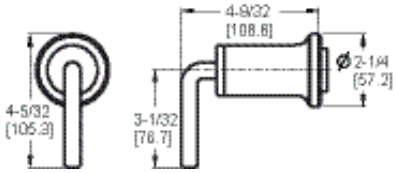

Features:
- SecurePfit™
- Metal Lever Handle and Matching Flange
- Can be used with Ø15-2WDX or Ø15-3WDNS for Cal Green Compliance
- Optional cross handles available, Order HHL-016TNT* seperately"

Must order Ø15-3WDNS (Non-Shared, Cal Green Compliant) or Ø15-2WDX (Shared) Rough-In Valve Separately. See Valve Section.

Tisbury™ Diverter Trim

	Ø16-TB1C	Polished Chrome	3	$158
	Ø16-TB1K	Brushed Nickel	3	$211
	Ø16-TB1D	Polished Nickel	3	$211
	Ø16-TB1BG	Brushed Gold	3	$276

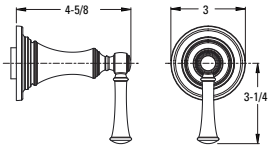

Features:
- SecurePfit™
- Metal Lever Handle and Matching Flange
- Can be used with Ø15-2WDX or Ø15-3WDNS for Cal Green Compliance
- Optional Cross Handle HHL-Ø16TB*
- Both Finished Matched Metal and Ceramic Caps Included

Must Order Ø15-4WDX or Ø15-3WDX Rough In Valve Separately. See Valve Section.

Contempra® Tub Spout

★	92Ø-227A	Polished Chrome	1	$107
★	92Ø-227J	Brushed Nickel	1	$147
★	92Ø-227B	Matte Black	1	$118
★	92Ø-227BG	Brushed Gold	1	$139

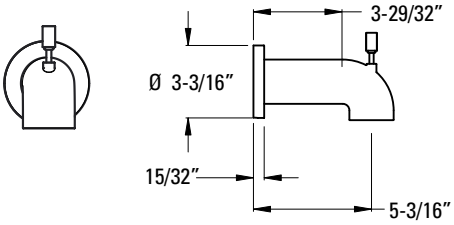

Features:
- All Metal
- IP & Quick Connect Diverter Spout

Deckard™ Tub Spout

★	92Ø-2Ø8A	Polished Chrome	1	$109
★	92Ø-2Ø8J	Brushed Nickel	1	$141
★	92Ø-2Ø8B	Matte Black	1	$122

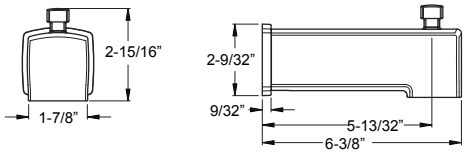

Features:
- All Metal
- IP & Quick Connect Diverter Spout

Showers

Core Offering | CEC Compliant | Cal Green Compliant | Meets EPA WaterSenseSM Standards | NSF Lead-Free Certified | ADA Compliant | UltraSeal™ | SecurePfit™

Kenzo™ Tub Spout

Model	Finish	Case Qty	List Price
92Ø-623A	Polished Chrome	1	$86
92Ø-623J	Brushed Nickel	1	$114
92Ø-623B	Matte Black	1	$128

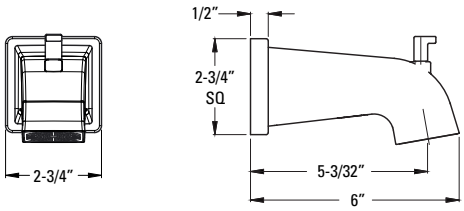

Technical Info

Features:
- All Metal
- IP & Quick Connect Diverter Spout

Round Non-Diverter Tub Spout

	Model	Finish	Case Qty	List Price
★	TBS51-SHWC	Polished Chrome	1	$92
★	TBS51-SHWK	Brushed Nickel	1	$129
★	TBS51-SHWB	Matte Black	1	$145
★	TBS51-SHWBG	Brushed Gold	1	$152

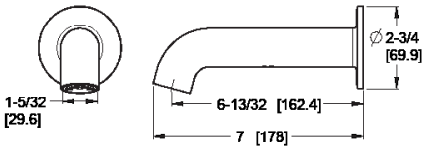

Features:
- All Metal Construction
- Includes copper sweat adapter

Square Non-Diverter Tub Spout

	Model	Finish	Case Qty	List Price
★	92Ø-247A	Polished Chrome	1	$99
★	92Ø-247J	Brushed Nickel	1	$137
★	92Ø-247B	Matte Black	1	$149
	92Ø-247BG	Brushed Gold	1	$159

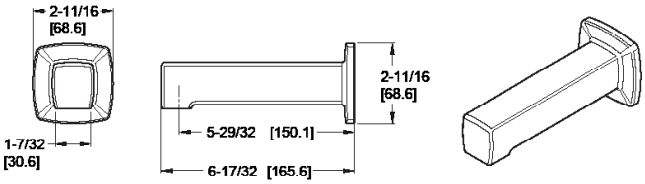

Features:
- All Metal Construction
- Includes copper sweat adapter

Showers

Core Offering | CEC Compliant | Cal Green Compliant | Meets EPA WaterSenseSM Standards | NSF Lead-Free Certified | ADA Compliant | UltraSeal™ | SecurePfit™

Pfirst Series & Job Packs

This family includes a full-line-up of faucets for kitchen, laundry, lavatory and tub/shower. Even as an opening price point family collection, all of these faucets are covered by the Pfister Pforever Warranty.

Superior design and great value, that's what Pfirst Series is all about.

Pull-Down Kitchen Faucet

Pfirst Modern™
1-Handle Pull-Down

	Model	Finish	Case Qty	List Price
★	GT529-PF2C	Polished Chrome	3	$264
★	GT529-PF2S	Stainless Steel	3	$296
★	GT529-PF2SDB	Spot Defense Matte Black	3	$346

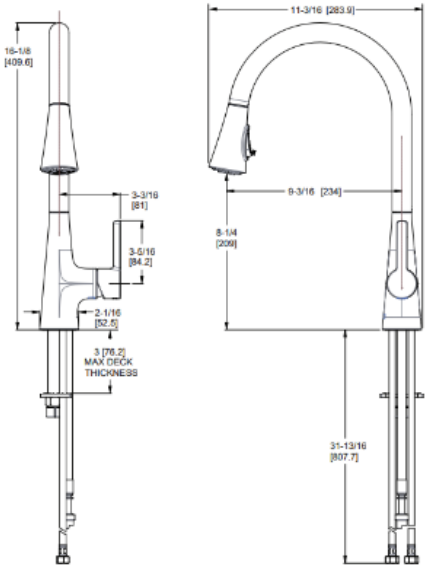

Technical Info

Holes:
- 1-Hole Installation

Features:
- 1.5 GPM Flow Rate
- 14" Extended Hose Length
- 3600 Rotating High Arc Spout
- 2 Function Pull-Down Sprayer (Spray and Stream)
- AutoDock™ Spray Head Docking
- 60" Braided Nylon Hose
- 12" Pull-Down Hose Length
- Forward Handle Operation
- Optional Deckplate Included
- 32" Integrated Nylon Braided Supply Lines with 3/8" Connections
- TiteSeal™ Technology
- Spot Defense™ Finish Resists Spots and Fingerprints (SDB Only)
- Pforever Seal™ Ceramic Disc Valve

Deckplate Model	Finish	List Price
961-296A	Polished Chrome	$25
961-296S	Stainless Steel	$28
961-296SDB	Spot Defense Matte Black	$34

Core Offering · CEC Compliant · Cal Green Compliant · Meets EPA WaterSenseSM Standards · NSF Lead-Free Certified · ADA Compliant · UltraSeal™ · SecurePfit™

Pull-Out Kitchen Faucet

Pfirst Series™ 1-Handle Pull-Out Kitchen Faucet

Model	Finish	Case Qty	List Price
★ G133-10CC	Polished Chrome	3	$187
G133-10SS	Stainless Steel	3	$216

Technical Info

Holes: · 1 or 3-Hole 8" Installation

Features:
- Ceramic Disc Valve
- Metal Lever Handle
- Two-Function Sprayhead: Stream and Spray
- Forward Only Handle Operation
- Single Post Mounting Ring and 3-Hole Deckplate Included
- 1.8 gpm @ 60 psi

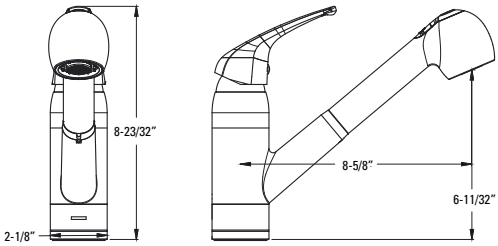

Deckplate Model	Finish	List Price
931-062A	Polished Chrome	$40
931-062S	Stainless Steel	$45

Pfirst Modern™ 1-Handle Pull-Out Kitchen Faucet

★ GT534-PFMC	Polished Chrome	3	$202
★ GT534-PFMS	Stainless Steel	3	$233
★ GT534-PFMSDB	Spot Defense Matte Black	3	$261

Holes: · 1 or 3-Hole 8" Installation

Features:
- 1.5 GPM Flow Rate
- 2 Function Pullout Sprayer (Spray & Stream)
- 53" Braided Nylon Hose
- 17" Pull-Out Hose Length
- AutoDock™ Sprayhead Docking
- Spot Defense™ Finish Resists Spots and Fingerprints (SDB Only)
- 32" Integrated Nylon Briaded Supply Lines with 3/8" Connections
- 1200 Swivel Spout
- Optional Deckplate
- TiteSeal™ Deckplate
- Pforever Seal™ Ceramic Disc Valve
- Limited Lifetime Warrant

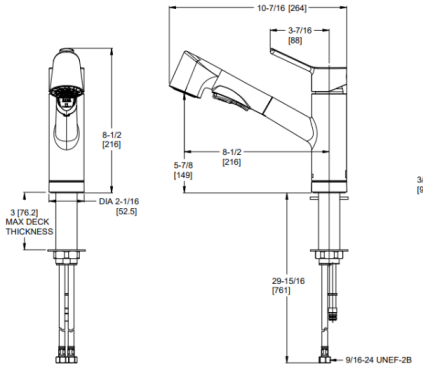

Deckplate Model	Finish	List Price
961-215A	Polished Chrome	$40
961-215S	Stainless Steel	$45
961-215SDB	Spot Defense Matte Black	$58

Core Offering · CEC Compliant · Cal Green Compliant · Meets EPA WaterSenseSM Standards · NSF Lead-Free Certified · ADA Compliant · UltraSeal™ · SecurePfit™

Single Control Kitchen Faucet

	Model	Finish	Case Qty	List Price
Single Handle Kitchen Faucet ★	G134-1444	Polished Chrome	3	$100

Technical Info

Holes: · 3-Hole 8" Installation

Features:
· Stainless Steel Ball Valve
· Metal Lever Handle
· Swivel Spout
· Order 941-372Ø for 1.5 gpm Aerator
· 1.8 gpm @ 60 psi

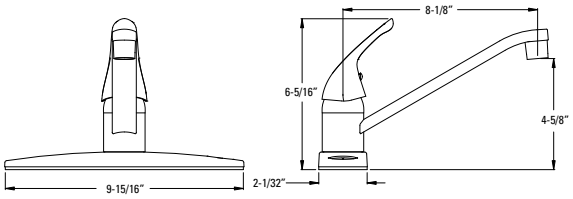

	Model	Finish	Case Qty	List Price
Single Handle Kitchen Faucet with Spray ★	G134-3444	Polished Chrome	3	$107

Holes: · 3-Hole 8" Installation

Features:
· Stainless Steel Ball Valve
· Metal Lever Handle
· Swivel Spout
· Matching Finish Sidespray
· Order 941-372Ø for 1.5 gpm Aerator
· 1.8 gpm @ 60 psi

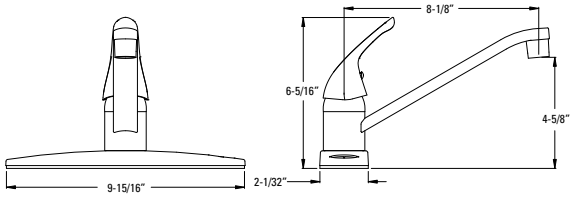

Core Offering · CEC Compliant · Cal Green Compliant · Meets EPA WaterSenseSM Standards · NSF Lead-Free Certified · ADA Compliant · UltraSeal™ · SecurePfit™

Two-Handle Kitchen Faucet

	Model	Finish	Case Qty	List Price
Two-Handle Kitchen Faucet	G135-1ØØØ	Polished Chrome	3	$95

Technical Info

Holes: · 3-Hole 8" Installation

Features:
· Washerless Cartridges
· Swivel Spout
· 1.8 gpm @ 60 psi

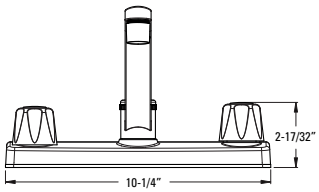

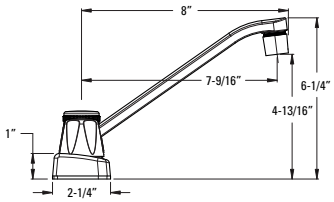

		Model	Finish	Case Qty	List Price
Two-Handle Kitchen Faucet	★	G136-2000	Polished Chrome	3	$126

Holes: · 3-Hole 8" Installation

Features:
· Stainless Steel Ball Valve
· Metal Lever Handles
· Swivel Spout
· 1.8 gpm @ 60 psi

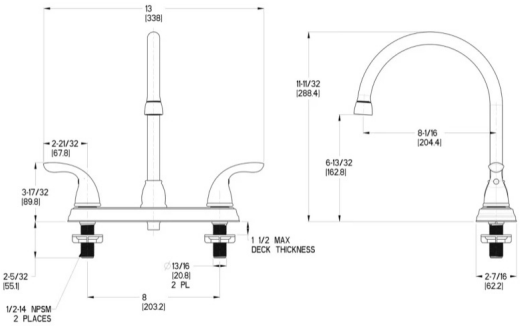

Single Control Lavatory Faucets

Pfirst Modern™
Single Control Lavatory

	Model	Finish	Case Qty	List Price
★	LG42-PFMØC	Polished Chrome	3	$200
	LG42-PFMØK	Brushed Nickel	3	$268
★	LG42-PFMØB	Matte Black	3	$335
	LG42-PFMØBG	Brushed Gold	3	$404

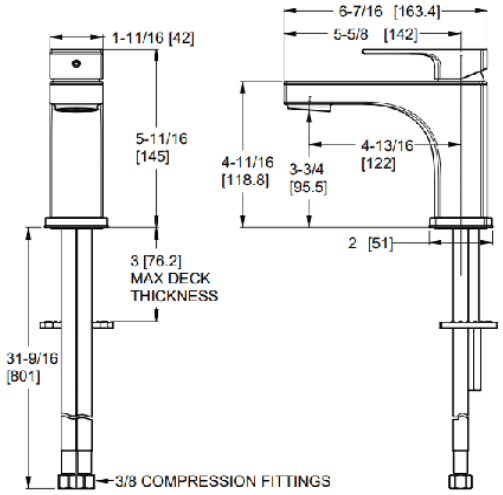

Technical Info

Holes: · 1 Installation Optional 3-hole with deckplate

Features:
- 1.2 GPM Flow Rate
- Mounting Hardware Included
- Optional Deckplate Available, Order 961-280* Separately
- Integrated Nylon Braided Supply Lines with 3/8" Compression Fittings
- Push & Seal™ Pop-Up
- TiteSeal™ Technology
- Pforever Seal™ Ceramic Disc Valve

★	961-28ØA	Polished Chrome	1	$25
	961-28ØJ	Brushed Nickel	1	$27
★	961-28ØB	Matte Black	1	$31
	96128ØBG	Brushed Gold	1	$42

Pfirst Modern™
Single Control Lavatory

★	LG142-Ø6ØØ	Polished Chrome	3	$188
★	LG142-Ø6ØK	Brushed Nickel	3	$238
★	LG142-Ø6ØB	Matte Black	3	$309

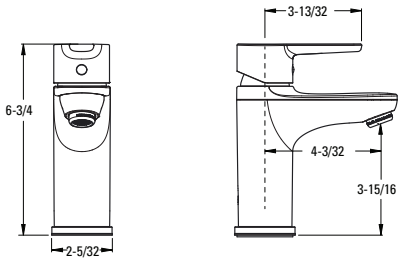

Holes: · 1 Installation

Features:
- Ceramic Disc Valve
- Metal Lever Handles
- High Temperature Limit Stop
- Optional 3-Hole Deck Plate. Order 961-217*
- Push & Seal Drain Included
- 1.2 gpm @ 60 psi

Core Offering · CEC Compliant · Cal Green Compliant · Meets EPA WaterSenseSM Standards · NSF Lead-Free Certified · ADA Compliant · UltraSeal™ · SecurePfit™

Single Control Lavatory Faucets

	Model	Finish	Case Qty	List Price
Single Control Lavatory ★	LG142-8ØØØ	Polished Chrome	3	$132

Technical Info

Holes: · 3-Hole 4" Installation

Features:
- Stainless Steel Ball Valve
- Metal Lever Handle
- Push & Seal Drain Included
- 1.2 gpm @ 60 psi

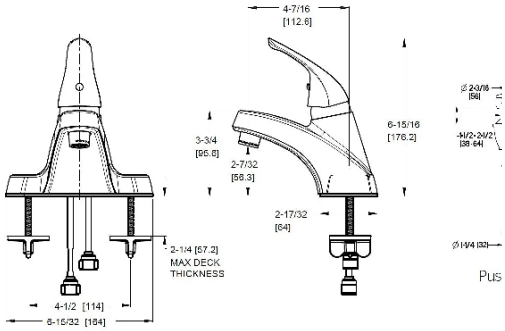

4" Centerset Lavatory Faucets

4" Centerset Lavatory ★	LG148-7ØØØ	Polished Chrome	3	$157

Holes: · 3-Hole 4" Installation

Features:
- Ceramic Disc Valves
- Metal Lever Handles
- High Arc Fixed Spout
- Push & Seal Drain Included
- 1.2 gpm @ 60 psi

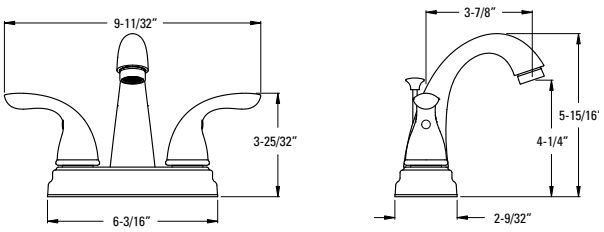

Technical Info

Holes: · 3 Installation

Features:
- 1.2 GPM Flow Rate
- Washerless Cartridges
- TiteSeal™ Technology
- Push & Seal™ Pop-Up
- Supply Lines Not Included

Pfirst Modern™ 4" Centerset Lavatory ★	LG48-PFMØC	Polished Chrome	3	$192
	LG48-PFMØK	Brushed Nickel	3	$255
★	LG48-PFMØB	Matte Black	3	$316
	LG48-PFMØBG	Brushed Gold	3	$385

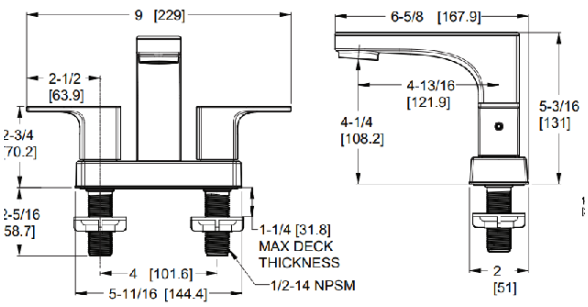

★ Core Offering · CEC Compliant · Cal Green Compliant · Meets EPA WaterSenseSM Standards · NSF Lead-Free Certified · ADA Compliant · UltraSeal™ · SecurePfit™

Bar / Laundry Faucet

	Model	Finish	Case Qty	List Price
Bar/Ent. Faucet ★	G171-4ØØØ	Polished Chrome	3	$72

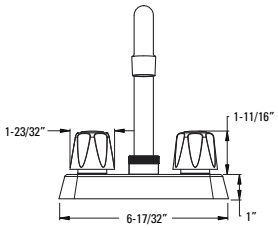

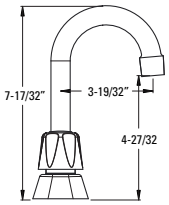

Technical Info

Holes: · 2-Hole 4" Installation

Features:
- Washerless Cartridges
- Metal Handles
- 1.8 gpm @ 60 psi

Tub & Shower

Pfirst Modern™
Pressure Balance Tub & Shower Trim

★	R89-Ø7ØØ	Polished Chrome	3	$106
	R89-Ø7ØK	Brushed Nickel	3	$157
★	R89-Ø7ØB	Matte Black	3	$194

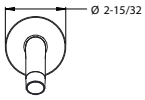

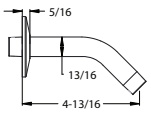

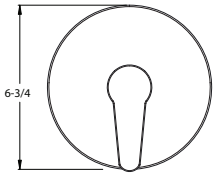

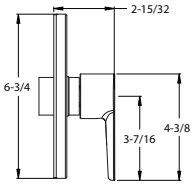

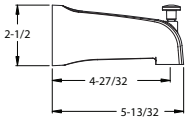

Holes: · 3-Hole Installation

Features:
- Quick Trim™ Wall Flange
- Metal Lever Handle
- Hot/Cold Indicator
- 5" IP & Quick Connect Metal Diverted Tub Spout
- Must Order Showerhead Separately
- Optional 6.5" IP & Quick Connect Metal Tub Spout Order 92Ø-185*

Must Order Pressure Balance Rough in Valve Separately. See Valve Section.

Pfirst Modern™
Pressure Balance Tub & Shower Trim

★	R89-8PFMC	Polished Chrome	3	$120
	R89-8PFMK	Brushed Nickel	3	$172
★	R89-8PFMB	Matte Black	3	$251
	R89-8PFMBG	Brushed Gold	3	$263

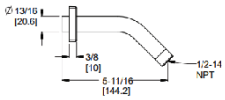

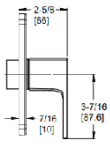

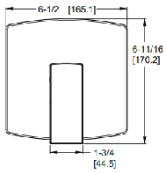

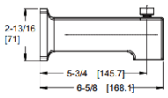

Holes: · 3-Hole Installation

Features:
- Showerhead Not Included
- Trim Only, Valve Not Included
- Requires 0X8/JX8 Valve (Sold Separately)
- Valve Trim Only (1PFM Only)
- Shower Only (7PFM Only)
- Tub & Shower (8PFM Only)
- Quick Connect/SlipPfit Tub Spout (8PFM Only

★ Core Offering · CEC Compliant · Cal Green Compliant · Meets EPA WaterSenseSM Standards · NSF Lead-Free Certified · ADA Compliant · UltraSeal™ · SecurePfit™

Pfirst Modern™ Pressure Balance Tub & Shower Trim

	Model	Finish	Case Qty	List Price
★	R89-7PFMC	Polished Chrome	3	$84
	R89-7PFMK	Brushed Nickel	3	$116
★	R89-7PFMB	Matte Black	3	$180
	R89-7PFMBG	Brushed Gold	3	$190

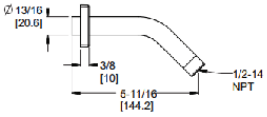

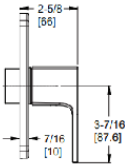

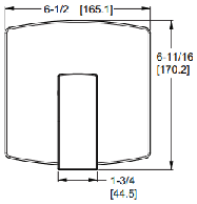

Technical Info

Holes: · 2-Hole Installation

Features:
- Showerhead Not Included
- Trim Only, Valve Not Included
- Requires 0X8/JX8 Valve (Sold Separately)
- Valve Trim Only (1PFM Only)
- Shower Only (7PFM Only)
- Tub & Shower (8PFM Only)
- Quick Connect/SlipPfit Tub Spout (8PFM Only)

Pfirst Modern™ Pressure Balance Shower Trim

★	R89-Ø6ØØ	Polished Chrome	3	$72
	R89-Ø6ØK	Brushed Nickel	3	$110
★	R89-Ø6ØB	Matte Black	3	$167

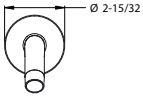

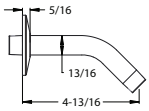

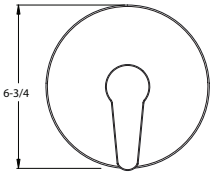

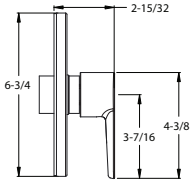

Holes: · 2-Hole Installation

Features:
- Quick Trim™ Wall Flange
- Metal Lever Handle
- Hot/Cold Indicator
- Must Order Showerhead Separately

Must Order Pressure Balance Rough in Valve Separately. See Valve Section.

Pressure Balance Tub & Shower Trim

★	LG89-Ø3ØØ	Polished Chrome	3	$62

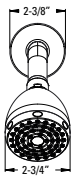

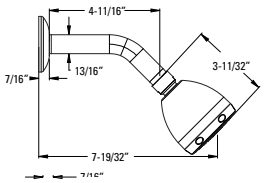

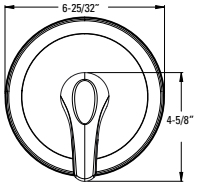

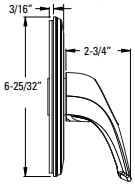

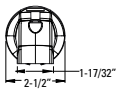

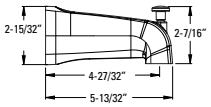

Holes: · 3-Hole Installation

Features:
- Quick Trim™ Wall Flange
- Metal Lever Handle
- Hot/Cold Indicator
- Bell Showerhead
- Easy To Clean Spray Nozzles
- Quick Connect Diverter Tub Spout
- Order 941-Ø55Ø for 1.5 gpm Showerhead Insert
- Showerhead 1.8 gpm @ 80 psi

Must Order Pressure Balance Rough in Valve Separately. See Valve Section.

★ Core Offering · CEC Compliant · Cal Green Compliant · Meets EPA WaterSenseSM Standards · NSF Lead-Free Certified · ADA Compliant · UltraSeal™ · SecurePfit™

Tub & Shower

Pressure Balance Shower Trim

Model	Finish	Case Qty	List Price
LG89-Ø2ØØ	Polished Chrome	3	$53

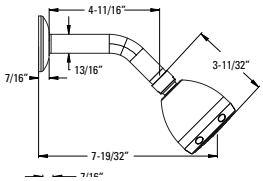

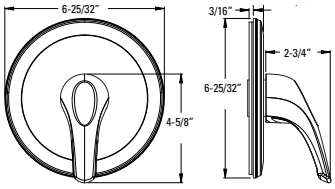

Holes: · 2-Hole Installation

Features:
- Quick Trim™ Wall Flange
- Metal Lever Handle
- Hot/Cold Indicator
- Bell Showerhead
- Easy To Clean Spray Nozzles
- Order 941-Ø55Ø for 1.5 gpm Showerhead Insert
- Showerhead 1.8 gpm @ 80 psi

Must Order Pressure Balance Rough in Valve Separately. See Valve Section.

Pfirst Modern™ Pressure Balance Valve Only Trim

R89-1PFMC	Polished Chrome	3	$68
R89-1PFMK	Brushed Nickel	3	$80
R89-1PFMB	Matte Black	3	$122
R89-1PFMBG	Brushed Gold	3	$128

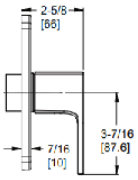

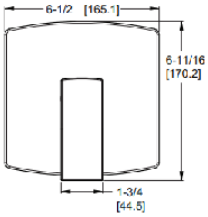

Features:
- Showerhead Not Included
- Trim Only, Valve Not Included
- Requires 0X8/JX8 Valve (Sold Separately)
- Valve Trim Only (1PFM Only)
- Shower Only (7PFM Only)
- Tub & Shower (8PFM Only)
- Quick Connect/SlipPfit Tub Spout (8PFM Only)

Pfirst Modern™ Pressure Balance Valve Only Trim

R89-Ø4ØØ	Polished Chrome	3	$59
R89-Ø4ØK	Brushed Nickel	3	$73
R89-Ø4ØB	Matte Black	3	$124

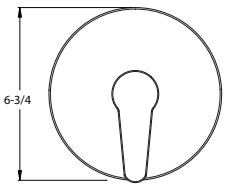

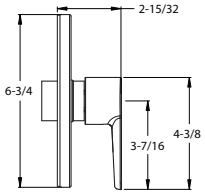

Features:
- Quick Trim™ Wall Flange
- Metal Lever Handle
- Hot/Cold Indicator

Must Order Pressure Balance Rough in Valve Separately. See Valve Section.

Core Offering · CEC Compliant · Cal Green Compliant · Meets EPA WaterSenseSM Standards · NSF Lead-Free Certified · ADA Compliant · UltraSeal™ · SecurePfit™

Brislin™
Job Pack Showerhead

	Model	Finish	Case Qty	List Price
★	LJ15-BIØC	Polished Chrome	12	$44
	LJ15-BIØK	Brushed Nickel	12	$60
★	LJ15-BIØB	Matte Black	12	$83

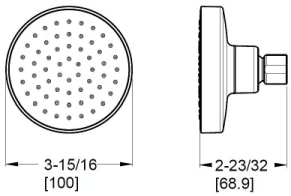

Technical Info

Features:
- Single Function
- JX = Job Pack Quantity Ships in Master Carton of 12
- Order 941-Ø55 for 1.5 gpm Showerhead Insert
- Showerhead 1.8 gpm @ 80 psi

Pfirst Series™
Job Pack Showerhead

★	LJ15-Ø6ØC	Polished Chrome	12	$23

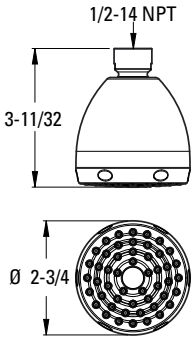

Features:
- Single Function
- JX = Job Pack Quantity Ships in Master Carton of 12
- Order 941-Ø55 for 1.5 gpm Showerhead Insert
- Showerhead 1.8 gpm @ 80 psi

Pfirst Modern™
Job Pack Showerhead

★	LJ15-Ø7ØC	Polished Chrome	12	$33
	LJ15-Ø7ØK	Brushed Nickel	12	$50
★	LJ15-Ø7ØB	Matte Black	12	$93

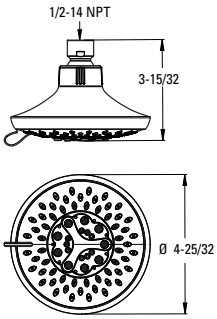

Features:
- Multi Function
- JX = Job Pack Quantity Ships in Master Carton of 12
- Showerhead 1.8 gpm @ 80 psi

Core Offering | CEC Compliant | Cal Green Compliant | Meets EPA WaterSenseSM Standards | NSF Lead-Free Certified | ADA Compliant | UltraSeal™ | SecurePfit™

Valves

Sure, they go behind the wall. But that doesn't mean your tub and shower valves aren't critical. Selecting the right valves comes down to your plumbing setup. From single-handle and multi-handle tub and shower valves, to diverter valves for hand held showers and body sprays, and a choice between pressure-balanced and thermostatic, you'll find a range of Pfister valves to meet your needs.

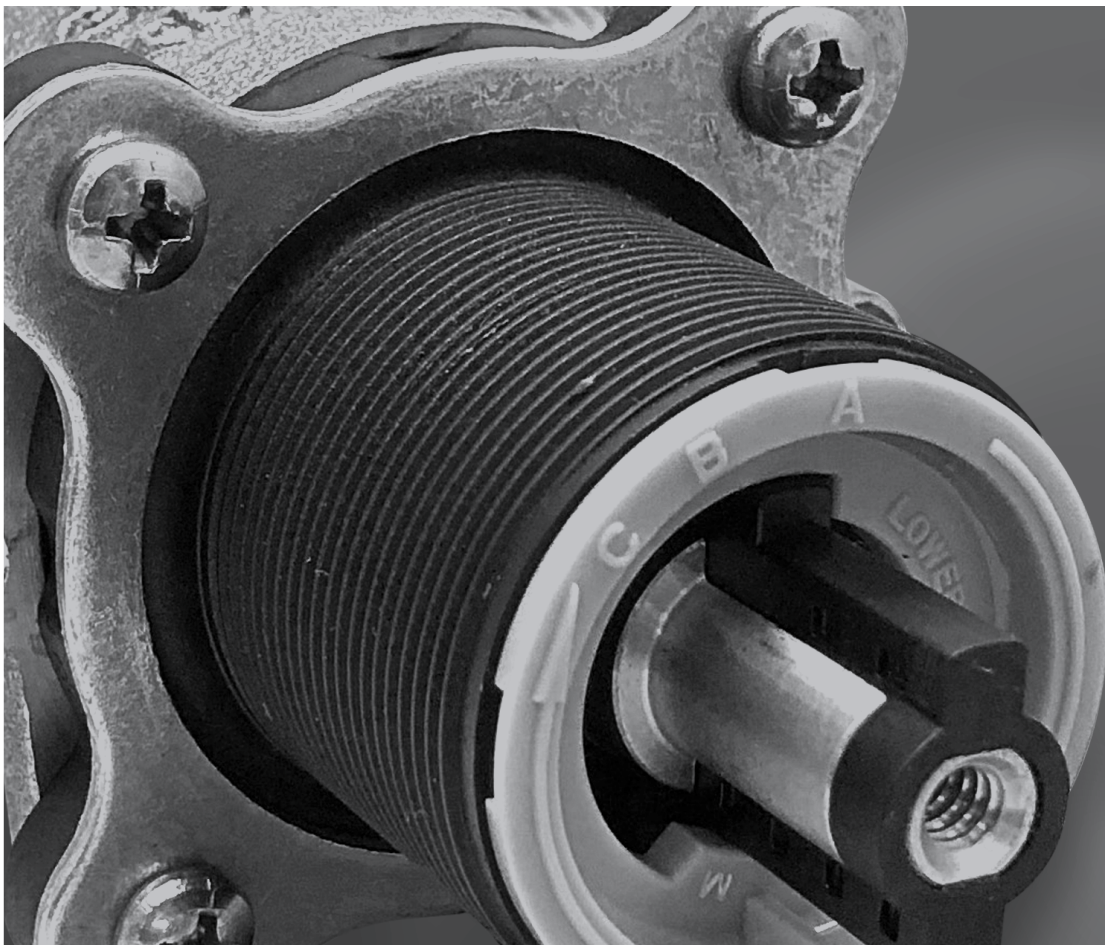

How to Order a Wall Mount Faucet

Rough-In
Choose the desired rough-in valve

Trim
Select trim

Complete Faucet

	Model	Description	Case Qty	List Price
Universal Wall Mount Rough Valve ★	LØW8-Ø1ØØ	N/A	3	$233

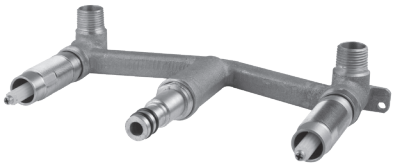

Technical Info

Holes: · 3-Hole 8" Installation

Features:
- Ceramic Disc Valves
- 11/16" Installation Depth Adjustability
- 8" Fixed Body
- 1.2 gpm @ 60 psi

Must Order Trim Separately

Universal Wall Mount Rough Valve ★	LØW8-Ø2ØØ	N/A	3	$327

Technical Info

Holes: · 3-Hole 8" Installation

Features:
- Ceramic Disc Valves
- 11/16" Installation Depth Adjustability
- 8" Fixed Body
- 1.2 gpm @ 60 psi

Must Order Trim Separately
For Tenet Wall Mount Model Only

★ Core Offering

How to Order a Pressure Balance Tub & Shower

Rough-In
Choose the desired rough-in valve

Trim
Select trim

Complete Tub & Shower

PermaBalance™ Tub & Shower Rough Valve

	Model	Description	Case Qty	List Price
★	ØX8-31ØA	No Stop	4	$144
★	ØX8-34ØA	With Stops	4	$175

Retrofittable Metal Stem Cartridge Fits Into Existing Valve Bodies

Technical Info

Features:
- Rough-In Valve and Pressure Balance Cartridge
- Ceramic Disc Valves
- 1/2" Universal Inlets to Accept 1/2" Copper, 1/2" Iron Pipe, PEX or CPVC Adapters
- Back-to-Back Compatible
- 34ØA= with Screwdriver Stops

PermaBalance™ Tub & Shower Rough PEX Ready Valve

★	JX8-31ØP	Job Pack	12	$132
★	JX8-34ØP	Job Pack w/Stops	12	$163

Retrofittable Metal Stem Cartridge Fits Into Existing Valve Bodies

This Valve Complies With Astfm F1807 and CSA B137.5 and Is to Be Used with The Sdr9 Pex Tubing Using the Crimp Ring System of Joining. It Cannot Be Used with Cold Expansion Fittings and Joining System.

Features:
- Rough-In Valve and Pressure Balance Cartridge
- Ceramic Disc Valve
- 1/2" PEX Inlets and Universal Male Threaded Outlets
- Back-to-Back Compatible
- JX= Job Pack Quantity Ships In Master Carton of 12
- 34ØP= With Screwdriver Stops

★ Core Offering

PermaBalance™
Tub & Shower Rough PEX Ready Valve

	Model	Description	Case Qty	List Price
★	JX8-41ØP	Job Pack	12	$132
★	JX8-44ØP	Job Pack w/Stops	12	$163

1/2" Cold Expansion PEX Inlets

Retrofittable Metal Stem Cartridge Fits Into Existing Valve Bodies

Technical Info

Features:
- Rough-In Valve and Pressure Balance Cartridge
- Ceramic Disc Valve
- 1/2" PEX Inlets and Universal Male Threaded Outlets
- Back-to-Back Compatible
- JX= Job Pack Quantity Ships in Master Carton of 12
- 44ØP= with Screwdriver Stops

PermaBalance™
0X8 Cartridge

★	974-5299	No Stop	1	$47

Features:
- Pressure Balance Cartridge
- Ceramic Disc Valve
- Can Be Used with VB8 & JV8 Valve Bodies
- Metal Stem
- Includes adapter for legacy valve castings

Valves

★ Core Offering

How to Order a Diverter

Rough-In
Choose the desired rough-in valve

+

Trim
Select trim

=

Complete Diverter

	Model	Description	Case Qty	List Price
Non Shared 3 Way Diverter Valve	Ø15-3WDNS	Diverter Valve	4	$159
6 Way Shared Diverter Valve ★	Ø15-6WDS	Diverter Valve	4	$146
Non-Shared Stacked 3-Way Diverter Valve ★	Ø15-3WDNSS	3 Way, 5 Port Non-Shared		$358
Shared Stacked 6-Way Diverter Valve ★	Ø15-6WDSS	6 way, 5 Port Shared		$358

Non Shared 3 Way Diverter Valve

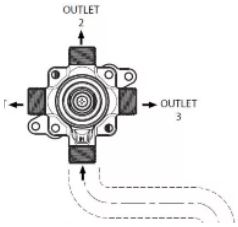

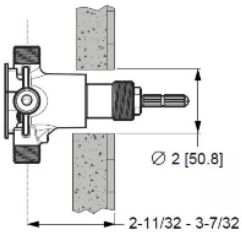

Technical Info

Features:
- 4 ports, 3 way Non-Shared Diverter
- Ceramic Disc Cartridge
- 1/2" Male IP Common Threads
- No shared Functionality
- Install Depth 3/732 to Centerline Connection
- Functionality for up to 3 devices
- Extension Kit 9951-3549
- 16 Series Diverter Trim Sold Separately

6 Way Shared Diverter Valve

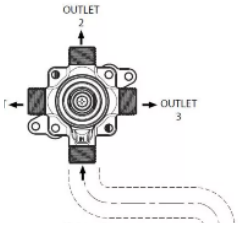

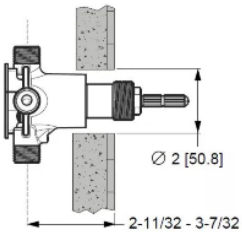

Features:
- 4 ports, 6 way Shared Diverter
- Ceramic Disc Cartridge
- 1/2" Male IP Common Threads
- Shared Functionality for up to 2 devices simultaneously
- Install Depth 2 11/32 - 3 7/32" to Centerline Connection
- Extension Kit 951-3549
- 16 Series Diverter Trim Sold Separately

Non-Shared Stacked 3-Way Diverter Valve

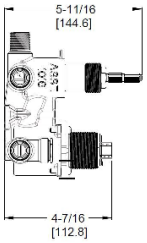

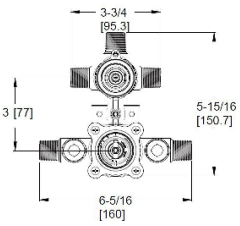

Features:
- All Metal Construction
- 3 Way Stacked Diverter
- Non-Shared Functionality
- Ceramic Disc Cartridge
- R89 Series Trim Sold Separately
- Dual 1/2" I.P. or 1/2" Copper Sweat Connections
- Integral Stops
- Temperature Limit Stop Included
- Anti-Scald Shower Cartridge
- Spool Pressure Balance Valve
- Optional 7/8" Extension Kit 951-3649 Available, Order Separately

Shared Stacked 6-Way Diverter Valve

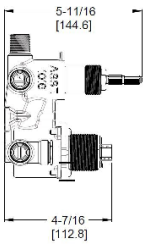

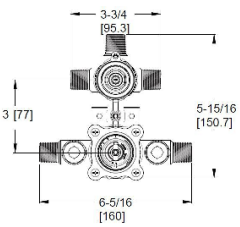

Features:
- All Metal Construction
- 6 Way Stacked Diverter
- Shared Functionality
- Ceramic Disc Cartridge
- R89 Series Trim Sold Separately
- Dual 1/2" I.P. or 1/2" Copper Sweat Connections
- Integral Stops
- Temperature Limit Stop Included
- Anti-Scald Shower Cartridge
- Spool Pressure Balance Valve
- Optional 7/8" Extension Kit 951-3649 Available, Order Separately

★ Core Offering

How to Order a Roman Tub Faucet

Rough-In
Choose the desired rough-in valve

+

Trim
Select trim

=

Complete Tub Filler

	Model	Description	Case Qty	List Price
Universal Roman Tub Valve Rough ★	JX6-Ø5ØR	Job Pack	12	$185

Technical Info

Holes: · 3-Hole 10" Installation

Dims: · 1 3/8" Max Deck Thickness

Features:
- Rough-In Valve Body & Cartridge
- Ceramic Disc Valve
- 10" Fixed Valve Body
- Thin and Thick Deck Mounting Hardware
- Order 974-375 1" Extension Kit if Deck Thickness Exceeds 1 3/8", Requires 1 Kit Per Handle, Stackable to Reach Desired Height up to 4 1/2"
- Order 975-015 extended spout shank for 4 1/2" of useable height
- 1/2" Sweat Inlets
- JX= Job Pack Quantity Ships in Master Carton of 12
- 15 - 18 gpm @ 60 psi

Universal Adjustable Roman Tub Valve Rough ★	ØX6-15ØR	Single Pack	3	$179

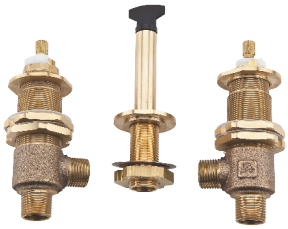

Holes: · 3-Hole Installation

Dims: · 1 3/8" Max Deck Thickness

Features:
- Rough-In Valve Body & Cartridge
- Ceramic Disc Valve
- Adjustable Installation
- Thin and Thick Deck Mounting Hardware
- Order 974-375 1" Extension Kit if Deck Thickness Exceeds 1 3/8", Requires 1 Kit Per Handle, Stackable to Reach Desired Height up to 4 1/2"
- Order 975-015 extended spout shank for 4 1/2" of useable height
- 1/2" Universal IP Male Threaded Inlets and 1/2" IPS Male Threaded Outlets
- JX= Job Pack Quantity Ships in Master Carton of 12
- 15 - 18 gpm @ 60 psi

★ Core Offering

Bath Accessories

The finishing touches that bring a stylish bathroom together. Our hardware and accessories are designed to complement your Pfister bath fixtures perfectly

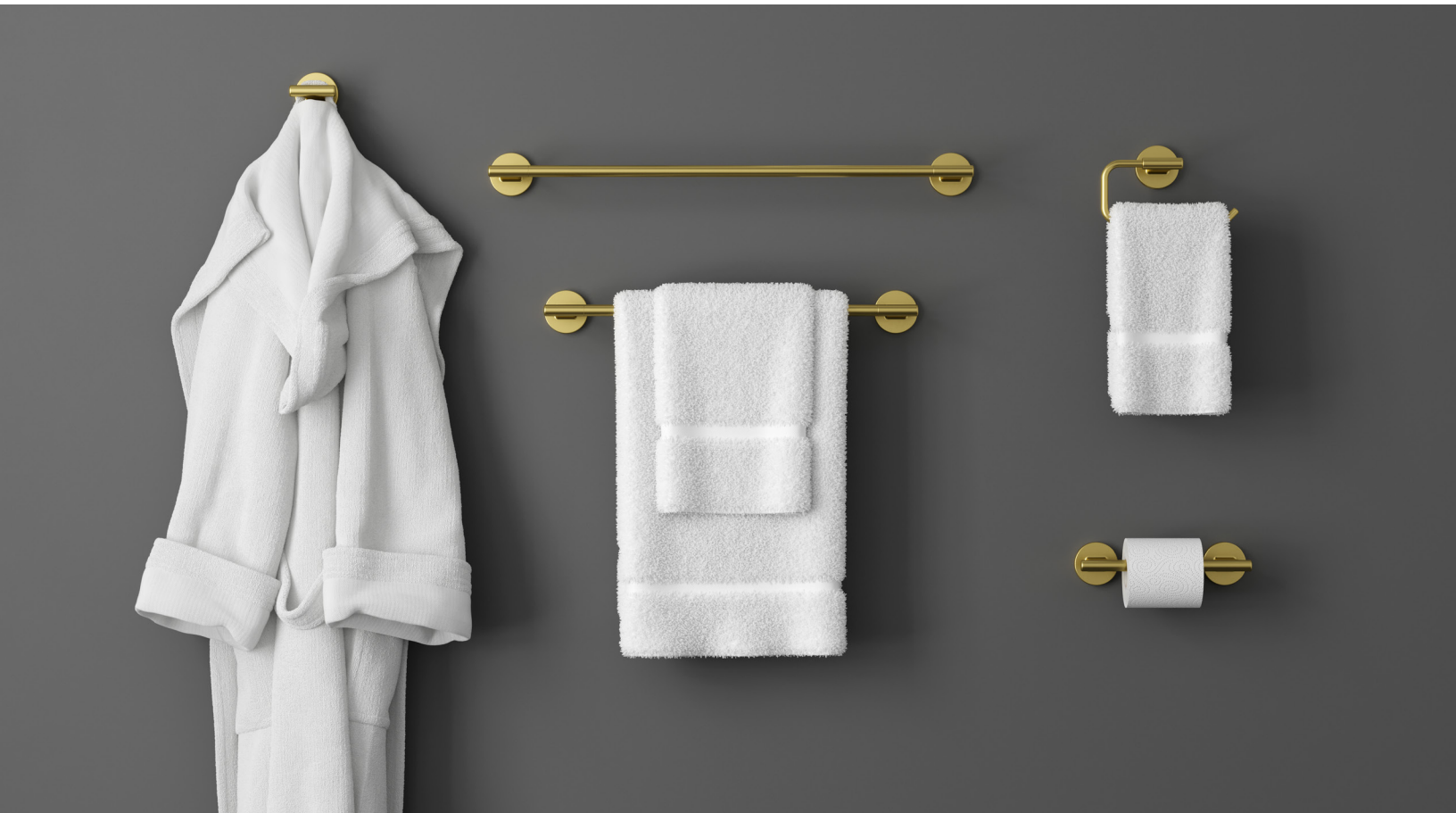

18" Towel Bar

	Model	Finish	Case Qty	List Price
★	BTB-FT1C	Polished Chrome	3	$60
★	BTB-FT1GS	Spot Defense Brushed Nickel	3	$64
★	BTB-FT1B	Matte Black	3	$67
★	BTB-FT1BG	Brushed Gold	3	$96

Technical Info

Holes: · 2-Hole

Features:
- Premium Metal Construction
- Standard Mounting Bracket
- Concealed Screw Installation
- Mounting Hardware Included

24" Towel Bar

★	BTB-FT2C	Polished Chrome	3	$66
★	BTB-FT2GS	Spot Defense Brushed Nickel	3	$70
★	BTB-FT2B	Matte Black	3	$72
★	BTB-FT2BG	Brushed Gold	3	$102

Holes: · 2-Hole

Features:
- Premium Metal Construction
- Standard Mounting Bracket
- Concealed Screw Installation
- Mounting Hardware Included

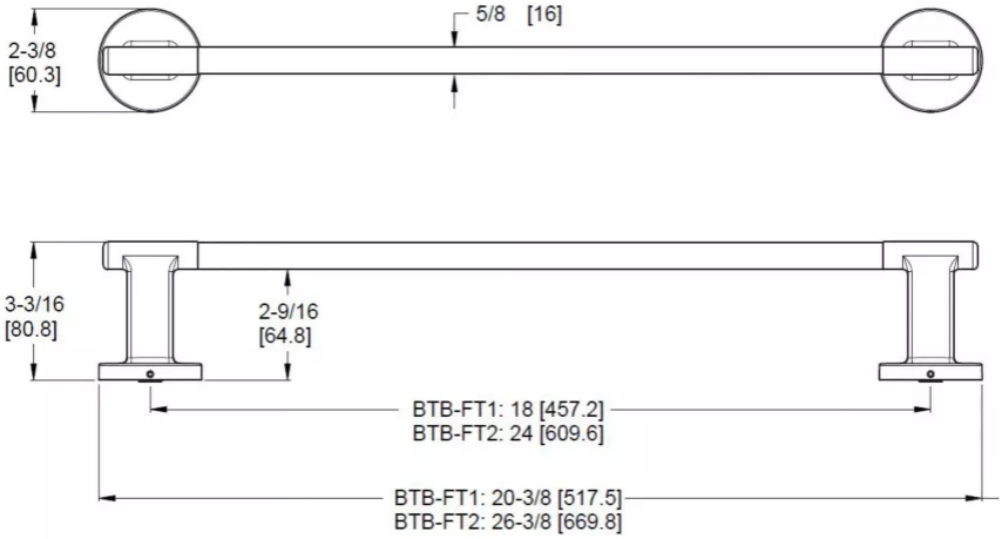

★ Core Offering

Towel Ring

	Model	Finish	Case Qty	List Price
★	BRB-FT0C	Polished Chrome	3	$48
★	BRB-FT0GS	Spot Defense Brushed Nickel	3	$50
★	BRB-FT0B	Matte Black	3	$52
★	BRB-FT0BG	Brushed Gold	3	$73

Technical Info

Holes: · 1-Hole

Features:
- Premium Metal Construction
- Standard Mounting Bracket
- Concealed Screw Installation
- Mounting Hardware Included

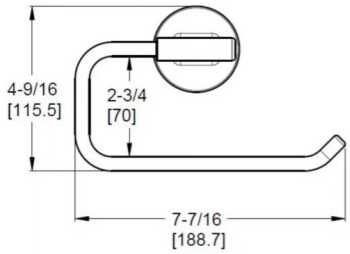

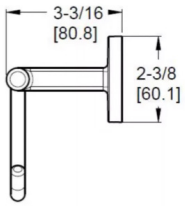

Paper Holder

	Model	Finish	Case Qty	List Price
★	BPH-FT0C	Polished Chrome	3	$58
★	BPH-FT0GS	Spot Defense Brushed Nickel	3	$60
★	BPH-FT0B	Matte Black	3	$62
★	BPH-FT0BG	Brushed Gold	3	$85

Holes: · 2-Hole

Features:
- Premium Metal Construction
- Standard Mounting Bracket
- Concealed Screw Installation
- Mounting Hardware Included
- Swivel Mount Paper Holder

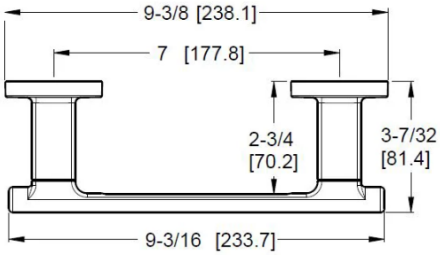

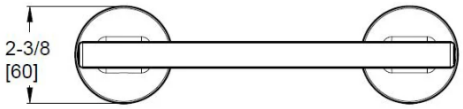

Robe Hook

	Model	Finish	Case Qty	List Price
★	BRH-FT0C	Polished Chrome	3	$31
★	BRH-FT0GS	Spot Defense Brushed Nickel	3	$35
★	BRH-FT0B	Matte Black	3	$37
★	BRH-FT0BG	Brushed Gold	3	$52

Holes: · 1-Hole

Features:
- Premium Metal Construction
- Standard Mounting Bracket
- Concealed Screw Installation
- Mounting Hardware Included

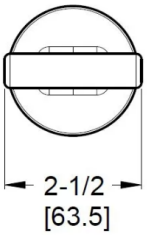

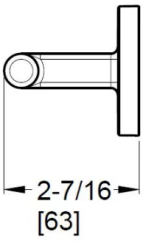

★ Core Offering

18" Towel Bar

	Model	Finish	Case Qty	List Price
★	BTB-DA1C	Polished Chrome	3	$63
★	BTB-DA1K	Brushed Nickel	3	$86
★	BTB-DA1B	Matte Black	3	$99

Technical Info

Holes: · 2-Hole

Features:
- All Metal Construction
- Superior Mounting Brackets
- Concealed Screw Installation
- Mounting Hardware Included

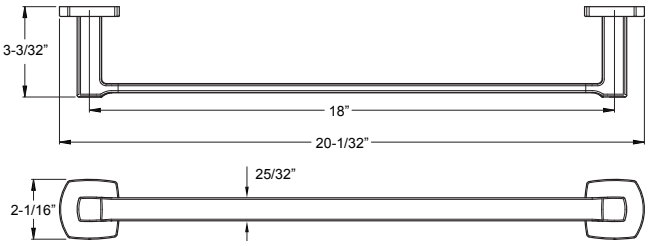

24" Towel Bar

	Model	Finish	Case Qty	List Price
★	BTB-DA2C	Polished Chrome	3	$75
★	BTB-DA2K	Brushed Nickel	3	$99
★	BTB-DA2B	Matte Black	3	$109

Holes: · 2-Hole

Features:
- All Metal Construction
- Superior Mounting Brackets
- Concealed Screw Installation
- Mounting Hardware Included

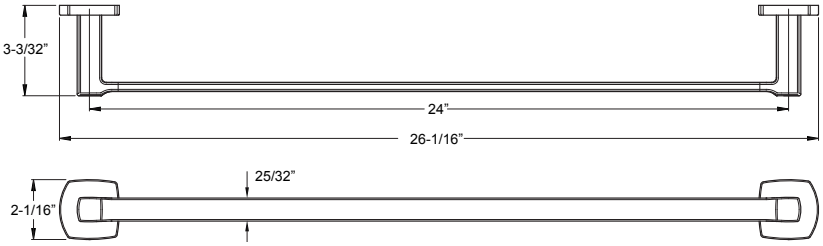

Towel Ring

	Model	Finish	Case Qty	List Price
★	BRB-DA1C	Polished Chrome	3	$51
★	BRB-DA1K	Brushed Nickel	3	$63
★	BRB-DA1B	Matte Black	3	$75

Holes: · 1-Hole

Features:
- All Metal Construction
- Superior Mounting Brackets
- Concealed Screw Installation
- Mounting Hardware Included

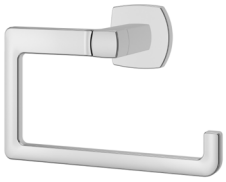

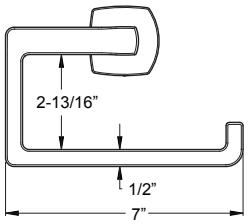

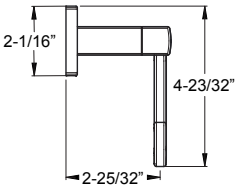

★ Core Offering

Paper Holder

	Model	Finish	Case Qty	List Price
★	BPH-DA1C	Polished Chrome	3	$58
★	BPH-DA1K	Brushed Nickel	3	$75
★	BPH-DA1B	Matte Black	3	$86

Technical Info

Holes: · 2-Hole

Features:
· All Metal Construction
· Superior Mounting Brackets
· Concealed Screw Installation
· Mounting Hardware Included

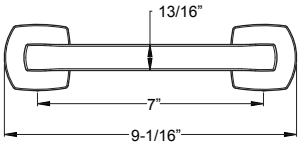

Robe Hook

	Model	Finish	Case Qty	List Price
★	BRH-DA1C	Polished Chrome	3	$23
★	BRH-DA1K	Brushed Nickel	3	$29
★	BRH-DA1B	Matte Black	3	$34

Holes: · 1-Hole

Features:
· All Metal Construction
· Superior Mounting Brackets
· Concealed Screw Installation
· Mounting Hardware Included

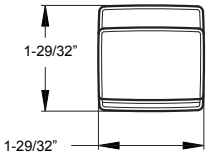

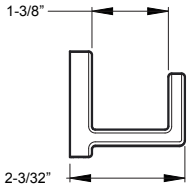

★ Core Offering

18" Towel Bar

Model	Finish	Case Qty	List Price
BTB-DF1C	Polished Chrome	3	$148
BTB-DF1K	Brushed Nickel	3	$216
BTB-DF1B	Matte Black	3	$225

Technical Info

Holes: · 2-Hole

Features:
- Premium Metal Construction
- Superior Mounting Posts
- Concealed Screw Installation
- Mounting Hardware Included

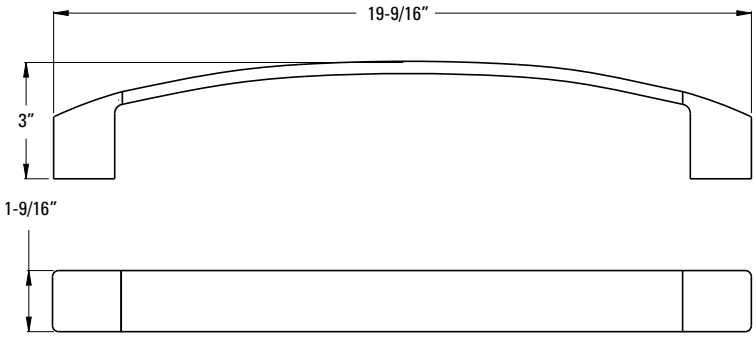

24" Towel Bar

BTB-DF2C	Polished Chrome	3	$181
BTB-DF2K	Brushed Nickel	3	$252
BTB-DF2B	Matte Black	3	$259

Holes: · 2-Hole

Features:
- Premium Metal Construction
- Superior Mounting Posts
- Concealed Screw Installation
- Mounting Hardware Included

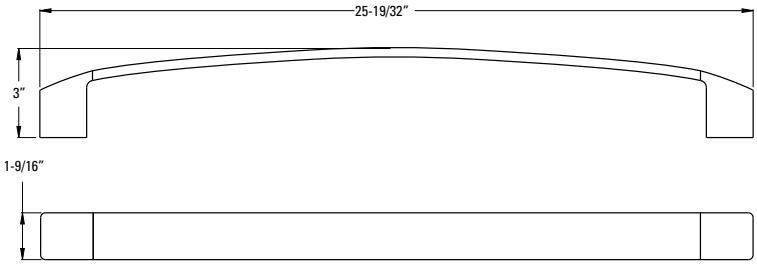

Towel Ring

BRB-DF1C	Polished Chrome	3	$137
BRB-DF1K	Brushed Nickel	3	$190
BRB-DF1B	Matte Black	3	$194

Holes: · 2-Hole

Features:
- Premium Metal Construction
- Superior Mounting Posts
- Concealed Screw Installation
- Mounting Hardware Included

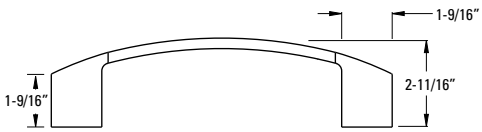

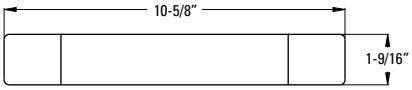

Paper Holder

Model	Finish	Case Qty	List Price
BPH-DF1C	Polished Chrome	3	$114
BPH-DF1K	Brushed Nickel	3	$157
BPH-DF1B	Matte Black	3	$164

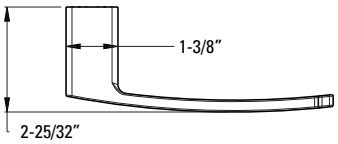

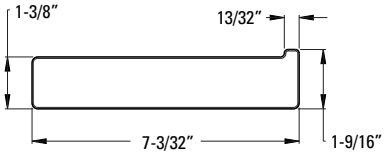

Technical Info

Holes: · 1-Hole

Features:
- Premium Metal Construction
- Superior Mounting Posts
- Concealed Screw Installation
- Mounting Hardware Included

Robe Hook

Model	Finish	Case Qty	List Price
BRH-DF1C	Polished Chrome	3	$88
BRH-DF1K	Brushed Nickel	3	$123
BRH-DF1B	Matte Black	3	$125

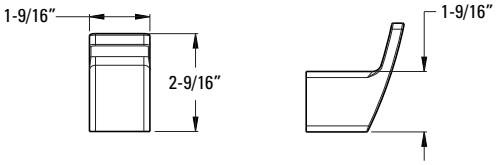

Holes: · 1-Hole

Features:
- Premium Metal Construction
- Superior Mounting Posts
- Concealed Screw Installation
- Mounting Hardware Included

18" Towel Bar

Model	Finish	Case Qty	List Price
BTB-RH1C	Polished Chrome	3	$164
BTB-RH1K	Brushed Nickel	3	$177
BTB-RH1B	Matte Black	3	$192
BTB-RH1BG	Brushed Gold	3	$208

Technical Info

Holes: · 2-Hole

Features:
- Premium Metal Construction
- Superior Mounting Posts
- Concealed Screw Installation
- Mounting Hardware Included

Towel Ring

BRB-RHØC	Polished Chrome	3	$125
BRB-RHØK	Brushed Nickel	3	$139
BRB-RHØB	Matte Black	3	$155
BRB-RHØBG	Brushed Gold	3	$170

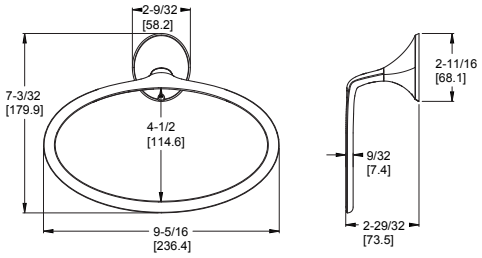

Holes: · 1-Hole

Features:
- Premium Metal Construction
- Superior Mounting Posts
- Concealed Screw Installation
- Mounting Hardware Included

Bath Accessories

Core Offering

Paper Holder

Model	Finish	Case Qty	List Price
BPH-RHØC	Polished Chrome	3	$123
BPH-RHØK	Brushed Nickel	3	$145
BPH-RHØB	Matte Black	3	$161
BPH-RHØBG	Brushed Gold	3	$177

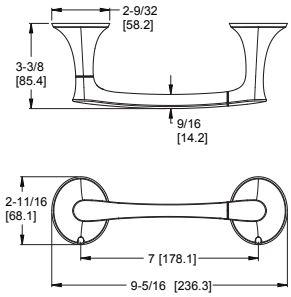

Technical Info

Holes: · 2-Hole

Features:
- Premium Metal Construction
- Pivot Swing Paper Mount
- Concealed Screw Installation
- Mounting Hardware Included

Robe Hook

BRH-RHØC	Polished Chrome	3	$84
BRH-RHØK	Brushed Nickel	3	$98
BRH-RHØB	Matte Black	3	$115
BRH-RHØBG	Brushed Gold	3	$129

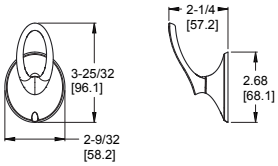

Holes: · 1-Hole

Features:
- Premium Metal Construction
- Superior Mounting Posts
- Concealed Screw Installation
- Mounting Hardware Included

Core Offering

18" Towel Bar

Model	Finish	Case Qty	List Price
BTB-1TNTC	Polished Chrome	6	$171
BTB-1TNTK	Brushed Nickel	6	$185
BTB-1TNTB	Matte Black	6	$202
BTB-1TNTBG	Brushed Gold	6	$216

Technical Info

Holes: · 2-Hole Installation

Features:
· Premium Metal Construction
· Superior Mounting Posts
· Concealed Screw Installation
· Mounting Hardware Included

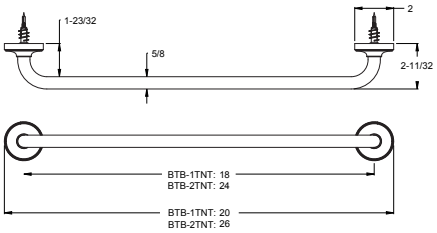

24" Towel Bar

Model	Finish	Case Qty	List Price
BTB-2TNTC	Polished Chrome	6	$244
BTB-2TNTK	Brushed Nickel	6	$261
BTB-2TNTB	Matte Black	6	$277
BTB-2TNTBG	Brushed Gold	6	$291

Holes: · 2-Hole Installation

Features:
· Premium Metal Construction
· Superior Mounting Posts
· Concealed Screw Installation
· Mounting Hardware Included

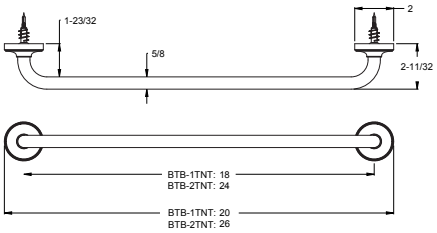

Towel Ring

Model	Finish	Case Qty	List Price
BRB-TNTC	Polished Chrome	8	$130
BRB-TNTK	Brushed Nickel	8	$145
BRB-TNTB	Matte Black	8	$161
BRB-TNTBG	Brushed Gold	8	$177

Holes: · 1-Hole Installation

Features:
· Premium Metal Construction
· Superior Mounting Posts
· Concealed Screw Installation
· Mounting Hardware Included

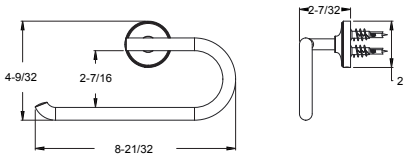

Paper Holder

Model	Finish	Case Qty	List Price
BPH-TNTC	Polished Chrome	8	$127
BPH-TNTK	Brushed Nickel	8	$152
BPH-TNTB	Matte Black	8	$165
BPH-TNTBG	Brushed Gold	8	$181

Technical Info

Holes: · 2-Hole Installation

Features:
- Premium Metal Construction
- Pivot Swing Paper Mount
- Concealed Screw Installation
- Mounting Hardware Included

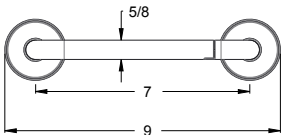

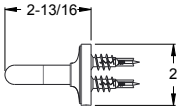

Robe Hook

Model	Finish	Case Qty	List Price
BRH-TNTC	Polished Chrome	12	$86
BRH-TNTK	Brushed Nickel	12	$101
BRH-TNTB	Matte Black	12	$120
BRH-TNTBG	Brushed Gold	12	$133

Holes: · 1-Hole Installation

Features:
- Premium Metal Construction
- Superior Mounting Posts
- Concealed Screw Installation
- Mounting Hardware Included

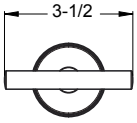

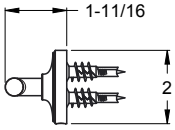

Tisbury™ - Accessories

24" Towel Rack

Model	Finish	Case Qty	List Price
BTB-TB3C	Polished Chrome	3	$170
BTB-TB3K	Brushed Nickel	3	$190
BTB-TB3D	Polished Nickel	3	$190
BTB-TB3BG	Brushed Gold	3	$215
BTB-TB3SDB	Spot Defense Matte Black	3	$207

Technical Info

Holes: · 4-Hole Installation

Features:
· Premium Metal Construction
· Superior Mounting Posts
· Concealed Screw Installation
· Mounting Hardware Included
· 2 Hanging Hooks Included
· 75lb. Max. Load

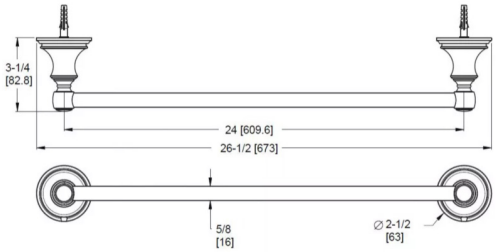

Robe Hook

BRH-TBØC	Polished Chrome	3	$56
BRH-TBØK	Brushed Nickel	3	$64
BRH-TBØD	Polished Nickel	3	$64
BRH-TBØBG	Brushed Gold	3	$77
BRH-TBØSDB	Spot Defense Matte Black	3	$73

Holes: · 1-Hole Installation

Features:
· Premium Metal Construction
· Superior Mounting Posts
· Concealed Screw Installation
· Mounting Hardware Included

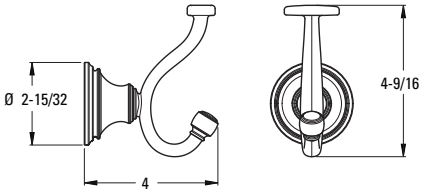

Tisbury™

Towel Ring

Model	Finish	Case Qty	List Price
BRB-TBØC	Polished Chrome	3	$111
BRB-TBØK	Brushed Nickel	3	$128
BRB-TBØD	Polished Nickel	3	$127
BRB-TBØBG	Brushed Gold	3	$154
BRB-TBØSDB	Spot Defense Matte Black	3	$146

Technical Info

Holes: · 1-Hole Installation

Features:
· Premium Metal Construction
· Superior Mounting Posts
· Concealed Screw Installation
· Mounting Hardware Included

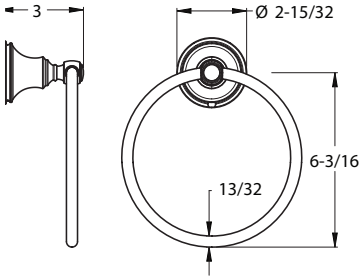

Paper Holder

Model	Finish	Case Qty	List Price
BPH-TBØC	Polished Chrome	3	$111
BPH-TBØK	Brushed Nickel	3	$155
BPH-TBØD	Polished Nickel	3	$154
BPH-TBØBG	Brushed Gold	3	$170
BPH-TBØSDB	Spot Defense Matte Black	3	$160

Holes: · 2-Hole Installation

Features:
· Premium Metal Construction
· Pivot Swing Paper Mount
· Concealed Screw Installation
· Mounting Hardware Included

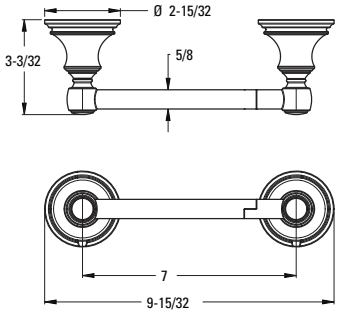

Pfister

Retail

Price Guide

KITCHEN
RETAIL

PULL-DOWNS

Arvada
Page R-6

Barulli
Page R-6

Buxton
Page R-7

Beringer
Page R-7

Ceylon
Page R-8

Classic
Page R-8

Fullerton®
Page R-8

Modern
Page R-9-

Karava
Page R-9

Rancho
Page R-10

Raya® Culinary
Page R-10

Zanna*
Page R-11

PULL-OUTS

Shelton®
Page R-11

SINGLE CONTROL

Classic®
Page R-12

* Retailer exclusive product, available for special order only.

BATH
RETAIL

SINGLE CONTROL

Admiral®
Page R-14

Breckenridge®
Page R-14

Bruxie
Page R-14

Ferris
Page R-15

Fullerton®
Page R-15

Ladera
Page R-15

Maritime
Page R-16

Matlock
Page R-16

Parisa®
Page R-16

Penn
Page R-17

Rancho
Page R-17

Vaneri
Page R-18

Venturi
Page R-17

Zeelan
Page R-18

BATH
RETAIL

TWO HANDLE 4" CENTRESET

Bruxie
Page R-19

Classic®
Page R-19

Courant
Page R-19

Fullerton
Page R-20

Henlow®
Page R-20

Karci
Page R-20

Masey®
Page R-21

Pasadena®
Page R-21

Penn
Page R-21

Rancho
Page R-22

Raya
Page R-22

Vedra
Page R-22

Vaneri
Page R-23

Venturi
Page R-23

TWO HANDLE 8" WIDESPREAD

Bruxie
Page R-24

Ladera
Page R-25

Maritime
Page R-25

Masey®
Page R-26

Pasadena®
Page R-26

Sonterra
Page R-27

Vaneri
Page R-27

Kitchen

Arvada
Single Handle Pull Down Kitchen Faucet

Model	Finish	Case Qty	List Price
F5297ARVGS	Stainless Steel	3	$432
F5297ARVB	Matte Black	3	$469

Technical Info

Holes:
- 1 or 4 Hole Installation

Dims:
- 16 1/16″ Spout Height
- 8-9/16″ Deck to Aerator
- 8 13/16″ Spout Reach
- 3″ Max Deck Thickness

Features:
- 1.8 GPM Flow Rate
- 1, 2, 3 or 4-Hole Installation; Deck Plate or Single Hole Mounting Option
- 3 Function Pull-Down Sprayer (Spray, Stream, and Pause)
- 360˚ Rotating High Arc Swivel Spout
- MagnePfit™ Sprayhead Docking
- Spot Defense™ Finish Resists Spots and Fingerprints (GS Finish Only)
- TopPfit™ Top Mount Installation
- TopPfit™ Quick Install Tool
- SoloTilt™ One-Hand Soap
- 12.4" Pull-Down Hose Length
- Braided Nylon Hose
- 36" Integrated PERT Supply Lines with 3/8" Connection
- Forward Handle Operation
- TiteSeal™ Technology
- Pfast Connect™ Adapter Technology
- Pforever Seal™ Ceramic Disc Valve

Barulli
Single-Handle Pull-Down Kitchen Faucet

F5297BARC	Polished Chrome	3	$374
F529BARGS	Stainless Steel	3	$421
F529BARB	Matte Black	3	$468
F529BARBG	Brushed Gold	3	$510

Holes:
- 1 or 4 Hole Installation

Dims:
- 16 1/4″ Spout Height
- 9″ Deck to Aerator
- 8 1/4″ Spout Reach
- 3″ Max Deck Thickness

Features:
- 1.8 GPM Flow Rate
- 1, 2, 3 or 4-Hole Installation; Deck Plate or Single Hole Mounting Option
- MagnePfit™ Sprayhead Docking
- Auto-Align™ Sprayhead Docking
- 2 Function Pull-Down Sprayer
- (Spray and Stream)
- 360˚ Rotating High Arc Swivel Spout
- 14.5" Extended Pull-Down
- Hose Length
- 36" Integrated Flexible PERT
- Supply Lines
- Nylon Braided Hose
- 3/8" Connection
- Multi-Mount
- Wipe Clean™ Nozzles
- Includes Quick Install Tool
- Forward Handle Operation
- Soap Pump Included
- Spot Defense™ Finish Reists Spots and Fingerprints (GS Finish Only)
- TiteSeal™ Technology
- Pfast Connect™
- Pforever Seal™ Ceramic Disc Valve

CEC Compliant | Cal Green Compliant | NSF Lead-Free Certified | ADA Compliant | Accudock™

Buxton
Single Handle Pull Down Kitchen Faucet

Model	Finish	Case Qty	List Price
F5297BNGS	Stainless Steel	3	$562
F5297BNB	Matte Black	3	$593

Technical Info

Holes:
- 1 or 3 Hole Installation

Dims:
- 15 9/16″ Spout Height
- 8-9/16″ Deck to Aerator
- 9 11/16″ Spout Reach
- 3″ Max Deck Thickness

Features:
- 1.8 GPM Flow Rate
- 1 or 3-Hole Installation; Single Hole Mounting or Optional Deckplate
- 3 Function Pull-Down Sprayer (Spray, Stream, and Pause)
- 360˚ Rotating High Arc Swivel Spout
- 16.3" Pull-Down Hose Length
- MagnePfit™ Sprayhead Docking
- Auto-Align™ Sprayhead Docking
- Spot Defense™ Finish Resists Spots and Fingerprints (GS Finish Only)
- Easy to Clean Nozzles
- Forward Handle Operation
- Integrated Nylon Braided Supply Lines with 3/8" Connections
- Nylon Braided Hose
- Optional Deckplate Included
- Quick Install Tool Included
- TiteSeal™ Technology
- Pforever Seal™ Ceramic Disc Valve

Beringer®
Single-Handle Pull-Down Kitchen Faucet

F5297BRGC	Polished Chrome	3	$499

Holes:
- 1 or 3 Hole Installation

Dims:
- 14- 15/16″ Spout Height
- 7 1/2″ Deck to Aerator
- 8 1/16″ Spout Reach
- 3″ Max Deck Thickness

Features:
- 1.8 GPM Flow Rate
- 2 Function Pull-Down Sprayer (Spray and Stream)
- 3/8" Connections
- 36" Integrated Nylon Braided Supply Lines
- 360˚ Rotating High Arc Spout
- 15" Pull-Down Hose Length
- Nylon Pull-Down Hose
- MultiMount 1 or 3 Hole Installation
- AutoDock™ Self-Retracting Sprayhead
- Quick Install Tool Included
- Forward Handle Operation
- Pfast Connect™
- TiteSeal™ Technology
- Pforever Seal™ Ceramic Disc Valve

CEC Compliant | Cal Green Compliant | NSF Lead-Free Certified | ADA Compliant | Accudock™

Ceylon
Single-Handle Pull-Down Kitchen Faucet

Model	Finish	Case Qty	List Price
F5297CLOC	Polished Chrome	3	$368
F5297CLO2GS	Stainless Steel	2	$412
F5297CLOSDB	Matte Black	3	$457

PIVOT

Easily tilt the sprayhead forward or backward to clean dishes, rinse the sink and fill pots and pans.

Technical Info

Holes:
- 1 or 4 Hole Installation

Dims:
- 15 9/16" Spout Height
- 7-9/16" Deck to Aerator
- 15 15/16" Spout Reach
- 3" Max Deck Thickness

Features:
- 1.8 GPM Flow Rate
- 1 or 3-Hole Installation; Deck Plate or Single Hole Mounting Option
- 3 Function Pull-Down Sprayer (Spray, Stream, and Pause)
- 360˚ Rotating High Arc Swivel Spout
- Pivot Sprayhead Tilts Backwards and Forwards
- MagnePfit™ Sprayhead Docking
- Spot Defense™ Finish Resists Spots and Fingerprints (GS & SDB Finish Only)
- TopPfit™ Top Mount Installation
- TopPfit™ Quick Install Tool
- SoloTilt™ One-Hand Soap
- 14.2" Pull-Down Hose Length
- Nylon Braided Hose
- 36" Integrated PERT Supply Lines with 3/8" Connection
- Forward Handle Operation
- TiteSeal™ Technology
- Pfast Connect™ Adapter Technology
- Pforever Seal™ Ceramic Disc Valve

Classic
Single Handle Pull Down Kitchen Faucet

F5297PFC	Polished Chrome	3	$289
F5297PFS	Stainless Steel	3	$306
F5297PFB	Matte Black	3	$327

Holes:
- 1 or 3-Hole Installation

Dims:
- 16 1/8" Spout Height
- 8 7/36" Deck to Aerator
- 9 1/16" Spout Reach
- 2 1/4" Max Deck Thickness

Features:
- 3-Function Pull-Down Sprayhead
- Pfast Connect™
- Quick Install Tool
- Forward-only handle
- Installs with or without deckplate (included)
- Pforever Seal™ Ceramic Disc Valve
- 1.8 GPM Flow Rate

Fullerton®
Single-Handle Pull-Down Kitchen Faucet

F5297FTC	Polished Chrome	3	$360
F5297FTS	Stainless Steel	3	$405
F5297FTB	Matte Black	3	$473
F5297FTBG	Brushed Gold	3	$501

Holes:
- 1 or 3 Hole Installation

Dims:
- 16 3/8" Spout Height
- 8 7/16" Deck to Aerator
- 9" Spout Reach
- 3" Max Deck Thickness

Features:
- 3-Function Sprayhead
- AccuDock™ sprayhead
- Pforever Seal™ Ceramic Disc Valve
- Installs with or without deckplate (included)
- 1.8 GPM Flow Rate

CEC Compliant | Cal Green Compliant | NSF Lead-Free Certified | ADA Compliant | Accudock™

Karava® Single-Handle Pull-Down Kitchen Faucet

Model	Finish	Case Qty	List Price
F5297KVC	Polished Chrome	3	$373
F5297KVS	Stainless Steel	3	$425
F529KVB	Matte Black	3	$477

Technical Info

Holes:
- 1 or 3 Hole Installation

Dims:
- 14- 15/16″ Spout Height
- 7 1/2″ Deck to Aerator
- 8 1/16″ Spout Reach
- 3″ Max Deck Thickness

Features:
- 1.8 GPM Flow Rate
- 2 Function Pull-Down Sprayer (Spray and Stream)
- 3/8" Connections
- 32" Integrated Nylon Braided Supply Lines
- 360˚ Rotating High Arc Spout
- 12" Pull-Down Hose Length
- Nylon Pull-Down Hose
- MultiMount 1 or 3 Hole Installation
- AutoDock™ Self-Retracting Sprayhead
- Forward Handle Operation
- Pfast Connect™
- TiteSeal™ Technology
- Pforever Seal™ Ceramic Disc Valve

Modern® * Single-Handle Pull-Down Kitchen Faucet

F5297MODC	Polished Chrome	3	$289
F5297MODS	Stainless Steel	3	$306
F529MODB	Matte Black	3	$327

Holes:
- 1 or 3 Hole Installation

Dims:
- 14- 15/16″ Spout Height
- 7 1/2″ Deck to Aerator
- 8 1/16″ Spout Reach
- 3″ Max Deck Thickness

Features:
- 1.8 GPM Flow Rate
- 2 Function Pull-Down Sprayer (Spray and Stream)
- 3/8" Connections
- 36" Integrated Nylon Braided Supply Lines
- 360˚ Rotating High Arc Spout
- 15" Pull-Down Hose Length
- Nylon Pull-Down Hose
- MultiMount 1 or 3 Hole Installation
- AutoDock™ Self-Retracting Sprayhead
- Forward Handle Operation
- Pfast Connect™
- TiteSeal™ Technology
- Pforever Seal™ Ceramic Disc Valve

* Retailer exclusive product, available for special order only.

CEC Compliant | Cal Green Compliant | NSF Lead-Free Certified | ADA Compliant | Accudock™

Rancho
Single-Handle Pull-Down Kitchen Faucet with Soap Dispenser

Model	Finish	Case Qty	List Price
F5297RCH2C	Polished Chrome	2	$356
F5297RCH2GS	Spot Defense	2	$387
F5297RCH2B	Matte Black	2	$418
F5297RCHBG	Brushed Gold	3	$449

Technical Info

Holes:
- 1, 2, 3 or 4-Hole Installation

Dims:
- 15'' Spout Height
- 9'' Deck to Aerator
- 9 1/16'' Spout Reach
- 3'' Maximum Deck Thickness

Features:
- MagnePfit™ Sprayhead
- Auto-Align™ Docking
- 3-function sprayhead
- Top Pfit™ Installation
- Forward-only handle
- Titeseal™ Deckplate
- Pfast Connect™
- Quick-Install Tool
- Solotilt™ One Handed Soap Dispenser
- Installs with or without deckplate (included)
- Pforever Seal™ Ceramic Disc Valve
- Spot-Defense Finish
- 1.8 GPM Flow Rate

Raya® Culinary
Single-Handle Pull-Down Kitchen Faucet with Soap Dispenser

F5297RYCB	Matte Black	3	$442

Holes:
- 1, 2, 3 or 4-Hole Installation

Dims:
- 19'' Spout Height
- 7 11/16'' Deck to Aerator
- 8 27/32'' Spout Reach
- 3'' Maximum Deck Thickness

Features:
- 3-function sprayhead
- Top Pfit™ Installation
- Accudock™ sprayhead
- Forward-only handle
- Titeseal™ Deckplate
- Pfast Connect™
- Quick-Install Tool
- Solotilt™ One Handed Soap
- Dispenser
- Installs with or without deckplate (included)
- Pforever Seal™ Ceramic Disc Valve
- Spot-Defense Finish
- 1.8 GPM Flow Rate

CEC Compliant | Cal Green Compliant | NSF Lead-Free Certified | ADA Compliant | Accudock™

Pull-Down Kitchen Faucets

Zanna *
Single-Handle Pull-Down Kitchen Faucet

Model	Finish	Case Qty	List Price
F5297ZNRC	Polished Chrome	3	$362
F5297ZNRGS	Spot Defense	3	$391
F5297ZNRB	Matte Black	3	$483
F5297ZNRBG	Brushed Gold	3	$536
F5297ZNRBBG	Matte Black x Brushed Gold	3	$498

Technical Info

Holes:
- 1, 2, 3 or 4-Hole Installation

Dims:
- 15-15/16'' Spout Height
- 8-7/8'' Deck to Aerator
- 9-1/8'' Spout Reach
- 3'' Maximum Deck Thickness

Features:
- MagnePfit™ Sprayhead
- 3-function sprayhead
- Quick-Install Tool
- Titeseal™ Deckplate
- Spot Defense Finish (GS Finish Only)
- Pforever Seal™ Ceramic Disc Valve
- Installs with or without deckplate (included)
- Pfast Connect™
- Forward-only-handle
- 1.66 GPM Flow Rate

* Retailer exclusive product, available for special order only.

Pull-Out Kitchen Faucets

Shelton®
Single Handle Pull-Out Faucet

Model	Finish	Case Qty	List Price
FWKP7012C	Polished Chrome	3	$151
FWKP701B	Matte Black	3	$207

Technical Info

Holes:
- 1 or 3 hole Installation

Dims:
- 8 7/16″ Spout Height
- 6″ Deck to Aerator
- 8 11/16″ Spout Reach
- 2″ Max Deck Thickness

Features:
- 2-Function Pullout Sprayhead
- Quick Install Tool
- Pfast Connect™
- Pforever Seal™ Ceramic Disc Valve
- Installs with or without deckplate (included)
- 1.8 GPM Flow Rate

CEC Compliant | Cal Green Compliant | NSF Lead-Free Certified | ADA Compliant | Accudock™

	Model	Finish	Case Qty	List Price
Classic® Single-Handle Kitchen Faucet	FWK1100C	Polished Chrome	3	$88

Technical Info

Holes:
- 3 Hole Installation

Dims:
- 7 19/32" Spout Height
- 5 31/32" Deck to Aerator
- 8 1/32" Spout Reach
- 1 1/14" Max Deck Thickness

Features:
- Spout swivels 360 degrees for maximum maneuverability
- 2.2 GPM Flow Rate

* Retailer exclusive product, available for special order only.

CEC Compliant

Cal Green Compliant

NSF Lead-Free Certified

ADA Compliant

Accudock™

Lavatory

Admiral
Single Handle Centerset Lavatory Faucet

Model	Finish	Case Qty	List Price
LF042ADLC	Polished Chrome	3	$232
LF042ADLB	Matte Black	3	$323

Technical Info

Holes: • 1 or 3-Hole 4" Installation

Dims:
- 6 13/16" Spout Height
- 3 23/32" Deck to Aerator
- 4 11/16" Spout Reach
- 3" Maximum Deck Thickness

Features:
- All Metal Construction
- Trough Spout
- Installs with or without deckplate (included)
- Pfast Connect™
- Push & Seal™ Drain
- TiteSeal™ Deckplate
- Pforever Seal™ Ceramic Disc Valve
- 1.2 GPM Flow Rate

Breckenridge®
Single Handle Centerset Lavatory Faucet

LF042BCBB	Matte Black	3	$305

Holes: • 1 or 3-Hole 4" Installation

Dims:
- 6 15/16" Spout Height
- 3 1/32" Deck to Spout
- 4 29/32" Spout Reach
- 3" Max Deck Thickness

Features:
- All metal construction
- Pforever Seal™ Ceramic Disc Valve
- Push & Seal™ Drain
- TiteSeal™ Deckplate
- Pfast Connect™
- Installs with or without deckplate (included)
- 1.2 GPM Flow Rate

Bruxie *
Single Handle Centerset Lavatory Faucet

LF042BIEBG	Brushed Gold	3	$250

* Home Depot Exclusive

Holes: • 1 or 3-Hole 4" Installation

Dims:
- 6 1/16" Spout Height
- 4 9/16" Deck to Spout
- 4 11/16" Spout Reach
- 3" Max Deck Thickness

Features:
- Pforever Seal™ Ceramic Disc Valve
- Push & Seal™ Drain
- TiteSeal™ Deckplate
- Pfast Connect™
- Installs with or without deckplate (included)
- 1.2 GPM Flow Rate

* Retailer exclusive product, available for special order

CEC Compliant | Cal Green Compliant | Meets EPA WaterSense | NSF Lead-Free Certified | ADA Compliant

Ferris *
Single Handle Centerset Lavatory Faucet

Model	Finish	Case Qty	List Price
LF042FERC	Polished Chrome	3	$215
LF042FERB	Matte Black	3	$253

Technical Info

Holes: • 1 or 3-Hole 4" Installation

Dims:
- 4 1/4'' Spout Height
- 3 7/16'' Deck to Aerator
- 4 13/32'' Spout Reach
- 3'' Maximum Deck Thickness

Features:
- Push & Seal™ Drain
- Pforever Seal™ Ceramic Disc Valve
- TiteSeal™ Deckplate
- Installs with or without deckplate (included)
- 1.2 GPM Flow Rate

Fullerton®
Single Handle Centerset Lavatory Faucet

Model	Finish	Case Qty	List Price
F042FTCC	Polished Chrome	3	$145

Technical Info

Holes: • 1 or 3-Hole 4" Installation

Dims:
- 4 13/32″ Spout Height
- 2 29/32″ Deck to Aerator
- 4 23/32″ Spout Reach
- 3″ Maximum Deck Thickness

Features:
- All Metal Construction
- Pfast Connect™
- Push & Seal™ Drain
- TiteSeal™ Deckplate
- Pforever Seal™ Ceramic Disc Valve
- Installs with or without deckplate (included)
- 1.5 GPM Flow Rate

Ladera *
Single Handle Centerset Lavatory Faucet

LF042LRCC	Polished Chrome	3	$184
LF042LRGS	Spot Defense	3	$192
LF042LRBB	Matte Black	3	$227

Holes: • 1 or 3-Hole 4" Installation

Dims:
- 5 3/4'' Spout Height
- 3 27/32'' Deck to Aerator
- 4 29/32'' Spout Reach
- 3'' Maximum Deck Thickness

Features:
- Multi-Mount
- Pfast Connect™
- Pforever Seal™ Ceramic Disc Valve
- Push & Seal™ Drain
- Spot Defense Finish (GS Finish Only)
- TiteSeal™ Deckplate
- 1.2 GPM Flow Rate

* Retailer exclusive product, available for special order only.

CEC Compliant | Cal Green Compliant | Meets EPA WaterSense | NSF Lead-Free Certified | ADA Compliant

Maritime*
Single Handle Centerset Lavatory Faucet

Model	Finish	Case Qty	List Price
LF042MRTC	Polished Chrome	3	$300
LF042MRTB	Matte Black	3	$383

Technical Info

Holes: • 1 Hole Installation Optional 3 hole

Dims:
- 6 13/16'' Spout Height
- 3-1/16'' Deck to Aerator
- 4 3/4'' Spout Reach
- 3'' Maximum Deck Thickness

Features:
- 1.2 GPM Flow Rate
- All Metal Construction
- 1 or 3-Hole Installation
- Concealed Screws
- Flex-Line Supply Lines
- TiteSeal™ Technology
- Push & Seal™ Drain
- Pfast Connect™
- Pforever Seal™ Ceramic Disc Valve

* Retailer exclusive product, available for special order

Matlock
Single Handle Centerset Lavatory Faucet

LF042MLCC	Polished Chrome	3	$171
LF042MLCB	Matte Black	3	$197

Holes: • 1 or 3-Hole 4" Installation

Dims:
- 5'' Spout Height
- 4 3/32'' Deck to Aerator
- 4 19/32'' Spout Reach
- 3'' Maximum Deck Thickness

Features:
- Push & Seal™ Drain
- Installs with or without deckplate (included)
- Pfast Connect™
- TiteSeal™ Deckplate
- Pforever Seal™ Ceramic Disc Valve
- 1.2 GPM Flow Rate

Parisa*
Single Handle Centerset Lavatory Faucet

LF042PRCC	Polished Chrome	3	$145
LF042PRKK	Brushed Nickel	3	$173

Holes: • 1 or 3-Hole 4" Installation

Dims:
- 4 11/16" Spout Height
- 3 7/16" Deck to Aerator
- 4 7/16" Spout Reach
- 2 1/2" Max Deck Thickness

Features:
- Push & Seal™ Drain
- Installs with or without deckplate (included)
- Pforever Seal Ceramic Disc Valve
- 1.2 GPM Flow Rate

* Retailer exclusive product, available for special order only.

CEC Compliant | Cal Green Compliant | Meets EPA WaterSense | NSF Lead-Free Certified | ADA Compliant

Penn
Single Handle Centerset Lavatory Faucet

Model	Finish	Case Qty	List Price
LF0421PEC	Polished Chrome	3	$231
LF0421PEB	Matte Black	3	$277

Technical Info

Holes: • 1 or 3-Hole 4" Installation

Dims:
- 5 11/16'' Spout Height
- 4 23/32'' Deck to Aerator
- 4 1/2'' Spout Reach
- 3'' Maximum Deck Thickness

Features:
- All Metal Construction
- Push & Seal™ Drain
- Installs with or without deckplate (included)
- Pfast Connect™
- Spot Defense Finish (GS Finish Only)
- TiteSeal™ Deckplate
- Pforever Seal™ Ceramic Disc Valve
- 1.2 GPM Flow Rate

Rancho
Single Handle Centerset Lavatory Faucet

LF042RCHC	Polished Chrome	3	$185
LF042RCHB	Matte Black	3	$230

Holes: • 1 or 3-Hole 4" Installation

Dims:
- 5 15/16'' Spout Height
- 4 5/32'' Deck to Aerator
- 4 31/32'' Spout Reach
- 3'' Maximum Deck Thickness

Features:
- Push & Seal™ Drain
- Installs with or without deckplate (included)
- Pfast Connect™
- Spot Defense Finish (GS Finish Only)
- TiteSeal™ Deckplate
- Pforever Seal™ Ceramic Disc Valve
- 1.2 GPM Flow Rate

Venturi
Single Handle Centerset Lavatory Faucet

LF042VNBB	Polished Chrome	3	$239
LF042VNBG	Brushed Gold	3	$289

* Home Depot Exclusive

Holes: • 1 or 3-Hole 4" Installation

Dims:
- 6 27/32'' Spout Height
- 4 5/32'' Deck to Aerator
- 4 5/8'' Spout Reach
- 1 1/2'' Maximum Deck

Features:
- All Metal Construction
- Installs with or without deckplate (included)
- Pfast Connect™
- Unique Ribbon Water Flow Pattern
- Push & Seal™ Drain
- TiteSeal™ Deckplate
- Pforever Seal™ Ceramic Disc Valve
- 1.2 GPM Flow Rate

* Retailer exclusive product, available for special order only.

CEC Compliant | Cal Green Compliant | Meets EPA WaterSense | NSF Lead-Free Certified | ADA Compliant

Vaneri
Single Handle Centerset Lavatory Faucet

Model	Finish	Case Qty	List Price
LF042VRICC	Polished Chrome	3	$266
LF042VRIGS	Brushed Nickel	3	$209
LF042VRIBB	Matte Black	3	$226

Technical Info

Holes: • 1 Installation

Dims:
- 6 13/16'' Spout Height
- 3 11/16'' Deck to Aerator
- 4 9/16'' Spout Reach
- 3'' Maximum Deck Thickness

Features:
- 1.2 GPM Flow Rate
- 1 or 3-Hole Installation
- Optional Deckplate Included
- Push & Seal™ Drain Included
- Spot Defense™ Finish Resists Spots and Fingerprints (GS Finish Only)
- Mounting Hardware Included
- Pfast Connect™ Supply Lines
- TiteSeal™ Deckplate
- Pforever Seal™ Ceramic Disc Valve

Zeelan *
Single Handle Centerset Lavatory Faucet

LF042ZLC	Polished Chrome	3	$251
LF042ZLB	Matte Black	3	$279

Holes: • 1 or 3-Hole 4" Installation

Dims:
- 8 7/8'' Spout Height
- 6 1/16'' Deck to Aerator
- 5'' Spout Reach
- 3'' Maximum Deck Thickness

Features:
- TiteSeal™ DeckPlate
- Installs with or without deckplate (included)
- Pforever Seal™ Ceramic Disc Valve
- 1.2 GPM Flow Rate

* Retailer exclusive product, available for special order only.

CEC Compliant | Cal Green Compliant | Meets EPA WaterSense | NSF Lead-Free Certified | ADA Compliant

Bruxie *
Two Handle Centerset Lavatory Faucet

Model	Finish	Case Qty	List Price
LF048BIEBG	Brushed Gold	3	$250.00

* Home Depot Exclusive

Technical Info

Holes:
- 3-Hole 4" Installation

Dims:
- 8 1/16" Spout Height
- 5 13/32" Deck to Aerator
- 4 1/2" Spout Reach
- 1 1/4" Max Deck Thickness

Features:
- TiteSeal™ Deckplate
- Fixed hub handles for smooth rotation
- Push & Seal™ Drain
- Pforever Seal Ceramic Disc Valve
- 1.2 GPM Flow Rate

Classic®
Two Handle Centerset Lavatory Faucet

LFWL2230C	Polished Chrome	3	$79
LFWL2230K	Brushed Nickel	3	$102

Holes:
- 3-Hole 4" Installation

Dims:
- 3 7/32" Spout Height
- 1 13/16" Deck to Aerator
- 4 5/32" Spout Reach
- 1 1/2" Max Deck Thickness

Features:
- Washerless Valves
- Mounting Hardware Included
- Mounting Posts Included
- Pop-Up Drain Included
- 1.2 GPM Flow Rate

Courant*
Two Handle Centerset Lavatory Faucet

LFO48COPC	Polished Chrome	3	$149

Holes:
- 3-Hole 4" Installation

Dims:
- 4 13/16" Spout Height
- 1 23/32" Deck to Aerator
- 3 21/32" Spout Reach
- 1 1/2" Max Deck Thickness

Features:
- Fixed Spout
- 3-Hole Deckplate
- Mounting Hardware Included
- Pop-Up Drain Included
- 1.2 GPM Flow Rate

* Retailer exclusive product, available for special order only.

CEC Compliant | Cal Green Compliant | Meets EPA WaterSense | NSF Lead-Free Certified | ADA Compliant

	Model	Finish	Case Qty	List Price
Fullerton Two Handle Centerset Lavatory Faucet	LF048FTCC	Polished Chrome	3	$241

Technical Info

Holes: • 3-Hole 4" Installation

Dims:
- 6″ Spout Height
- 4 19/32″ Deck to Aerator
- 4 3/16″ Spout Reach
- 1 11/16″ Maximum Deck Thickness

Features:
- TiteSeal™ Deckplate
- Fixed hub handles for smooth rotation
- Push & Seal™ Drain
- Pforever Seal Ceramic Disc Valve
- 1.2 GPM Flow Rate

Henlow® Two Handle Centerset Lavatory Faucet	LF048HECC	Polished Chrome	3	$129

Holes: • 3 Hole 4″ Installation

Dims:
- 8″ Spout Height
- 4 29/32″ Deck to Spout
- 5 1/4″ Spout Reach
- 1 1/2″ Max Deck Thickness

Features:
- TiteSeal™ Deckplate
- White Ceramic Handles
- Washerless Cartridges
- 1.2 GPM Flow Rate

Karci Two Handle Centerset Lavatory Faucet	LF048KABB	Matte Black	3	$254

Holes: • 3-Hole 4" Installation

Dims:
- 5 21/32'' Spout Height
- 4 3/4'' Deck to Aerator
- 4 3/16'' Spout Reach
- 1 1/4'' Maximum Deck Thickness

Features:
- Push & Seal™ Drain
- Fixed hub handles for smooth rotation
- Pforever Seal Ceramic Disc Valve
- All Metal Construction
- Spot Defense Finish (GS Finish Only)
- TiteSeal™ DeckPlate
- 1.2 GPM Flow Rate

* Retailer exclusive product, available for special order only.

CEC Compliant | Cal Green Compliant | Meets EPA WaterSense | NSF Lead-Free Certified | ADA Compliant

Masey®
Two Handle Centerset Lavatory Faucet

Model	Finish	Case Qty	List Price
LF048MCCC	Polished Chrome	3	$136
LF048MCKK	Brushed Nickel	3	$151

Techincal Info

Holes:
- 3 Hole 4" Installation

Dims:
- 6 1/32" Spout Height
- 3 31/32" Deck to Spout
- 4 3/4" Spout Reach
- 1 1/2" Max Deck Thickness

Features:
- Push and Seal™ Drain
- TiteSeal™ DeckPlate
- Fixed hub handles for smooth rotation
- Pforever Seal Ceramic Disc Valve
- 1.2 GPM Flow Rate

Pasadena*
Two Handle Centerset Lavatory Faucet

LF048PDCC	Polished Chrome	3	$156

Holes:
- 3-Hole 4" Installation

Dims:
- 5 5/8" Spout Height
- 3 23/32" Deck to Spout
- 4 5/8" Spout Reach
- 1 7/16" Max Deck Thickness

Features:
- Push and Seal™ Drain
- Fixed hub handles for smooth rotation
- Pforever Seal Ceramic Disc Valve
- 1.2 GPM Flow Rate

Penn
Two Handle Centerset Lavatory Faucet

LF048PEC	Polished Chrome	3	$241
LF048PEB	Matte Black	3	$289

Holes:
- 3 Hole 4" Installation

Dims:
- 5 15/32'' Spout Height
- 4 17/32'' Deck to Aerator
- 4 21/32'' Spout Reach
- 1 1/4'' Maximum Deck Thickness

Features:
- Push and Seal™ Drain
- Fixed hub handles for smooth rotation
- Pforever Seal Ceramic Disc Valve
- All Metal Construction
- TiteSeal™ DeckPlate
- 1.2 GPM Flow Rate

CEC Compliant | Cal Green Compliant | Meets EPA WaterSense | NSF Lead-Free Certified | ADA Compliant

Rancho
Two Handle Centerset Lavatory Faucet

Model	Finish	Case Qty	List Price
LF048RCHC	Polished Chrome	3	$185
LF048RCHGS	Spot Defense	3	$209
LF048RCHB	Matte Black	3	$230

Techincal Info

Holes:
- 3 Hole 4" Installation

Dims:
- 6 9/16'' Spout Height
- 4 23/32'' Deck to Aerator
- 4 7/16'' Spout Reach
- 1 1/2'' Maximum Deck Thickness

Features:
- Push and Seal™ Drain
- Fixed hub handles for smooth rotation
- Pforever Seal Ceramic Disc Valve
- Spot Defense Finish (GS Finish Only)
- All Metal Construction
- TiteSeal™ DeckPlate
- 1.2 GPM Flow Rate

Raya
Two Handle Centerset Lavatory Faucet

LF048RYCC	Polished Chrome	3	$229
LF048RYSDB	Spot Defense Matte Black	3	$302

Holes:
- 3 Hole 4" Installation

Dims:
- 8 1/8'' Spout Height
- 5 9/16'' Deck to Aerator
- 4 5/8'' Spout Reach
- 1 1/4'' Maximum Deck Thickness

Features:
- 1.2 GPM Flow Rate
- Fixed Hubs
- Spot Defense™ Finish Resists Spots and Fingerprints (GS & SDB Finish Only)
- Push & Seal™ Pop-Up
- Supply Lines Not Included
- TiteSeal™ Technology
- Washerless Cartridges

Vedra *
Two Handle Centerset Lavatory Faucet

LF048VEDC	Polished Chrome	3	$172
LF048VEDGS	Spot Defense	3	$203
LF048VEDB	Matte Black	3	$239

Holes:
- 3 Hole 4" Installation

Dims:
- 8'' Spout Height
- 5 5/32'' Deck to Aerator
- 4 9/16'' Spout Reach
- 1 1/4'' Maximum Deck Thickness

Features:
- Push & Seal™ Drain
- Pforever Seal Ceramic Disc Valve
- Spot Defense Finish (GS Finish Only)
- Fixed hub handles for smooth rotation
- Washerless Cartridges
- TiteSeal™ DeckPlate
- 1.2 GPM Flow Rate

* Retailer exclusive product, available for special order only.

CEC Compliant | Cal Green Compliant | Meets EPA WaterSense | NSF Lead-Free Certified | ADA Compliant

Vaneri
Two Handle Centerset Lavatory Faucet

Model	Finish	Case Qty	List Price
LF048VRIGS	Brushed Nickel	3	$174
LF048VRIBB	Matte Black	3	$209

Technical Info

Holes:
- 3 Hole 4" Installation

Dims:
- 81/8' Spout Height
- 5 1/4'' Deck to Aerator
- 4 9/16'' Spout Reach
- 1 1/4'' Maximum Deck Thickness

Features:
- 1.2 GPM Flow Rate
- Concealed Screws
- Fixed Hub
- High Arc Spout
- Mounting Hardware Included
- Spot Defense™ Finish Resists
- Spots and Fingerprints (GS Finish Only)
- Push & Seal™ Pop-Up Drain
- Quick Install Tool
- TiteSeal™ Technology
- Washerless Cartridges

Venturi
Two Handle Centerset Lavatory Faucet

LF048VNBB	Matte Black	3	$234
LF048VNBG	Brushed Gold	3	$261

Holes:
- 3 Hole 4" Installation

Dims:
- 5 11/32'' Spout Height
- 4 9/16'' Deck to Aerator
- 4 1/32'' Spout Reach
- 1 1/4'' Maximum Deck Thickness

Features:
- Push & Seal™ Drain
- Pforever Seal Ceramic Disc Valve
- Unique Ribbon Water Flow
- TiteSeal™ DeckPlate
- 1.2 GPM Flow Rate

CEC Compliant | Cal Green Compliant | Meets EPA WaterSense | NSF Lead-Free Certified | ADA Compliant

	Model	Finish	Case Qty	List Price
Bruxie® * Two Handle Widespread Lavatory Faucet	LF049BIEGS	Brushed Nickel	3	$288
	LF049BIESDB	Matte Black	3	$262

Technical Info

Holes:
- 3-Hole 8-20" Installation

Dims:
- 7 3/8" Spout Height
- 4 3/4" Deck to Aerator
- 7 7/8" Spout Reach
- 2 1/8" Maximum Deck Thickness

Features:
- Push & Seal™ Drain
- Fixed hub handles for smooth rotation
- Quick Install™ Tool
- Spot Defense Finish
- Pforever Seal Ceramic Disc Valves
- Pfast Connect
- TiteSeal™ DeckPlate
- 1.2 GPM Flow Rate

* Retailer exclusive product, available for special order only.

CEC Compliant

Cal Green Compliant

Meets EPA WaterSense

NSF Lead-Free Certified

ADA Compliant

	Model	Finish	Case Qty	List Price
Ladera * Two Handle Widespread Lavatory Faucet	LF049LRYY	Tuscan Bronze	3	$277

Techincal Info

Holes:
- 3-Hole 8-15" Installation

Dims:
- 6 11/32" Spout Height
- 4 7/32" Deck to Aerator
- 5 1/8" Spout Reach
- 2" Maximum Deck Thickness

Features:
- Push & Seal™ Drain
- Fixed hub handles for smooth rotation
- Adjustable Install
- Pforever Seal Ceramic Disc Valves
- Pfast Connect
- TiteSeal™ DeckPlate
- 1.2 GPM Flow Rate

*Maritime Two Handle Widespread Lavatory Faucet	LF049MRTC	Polished Chrome	3	$218
	LF049MRTB	Matte Black	3	$241

Holes:
- 3-Hole 8-15" Installation

Dims:
- 6-5/16" Spout Height
- 4-3/4" Deck to Aerator
- 4-15/16" Spout Reach
- 1-1/2" Max Deck Thickness

Features:
- 1.2 GPM Flow Rate
- All Metal Construction
- 3-Hole Installation
- Concealed Screws
- Fixed Hubs
- Supply Lines Not Included
- TiteSeal™ Technology
- Push & Seal™ Drain
- Pfast Connect™
- Pforever Seal™ Ceramic Disc Valve

* Retailer exclusive product, available for special order only.

CEC Compliant | Cal Green Compliant | Meets EPA WaterSense | NSF Lead-Free Certified | ADA Compliant

	Model	Finish	Case Qty	List Price
Masey® Two Handle Widespread Lavatory Faucet	LF049MCCC	Polished Chrome	3	$218
	LF049MCKK	Brushed Nickel	3	$241

Technical Info

Holes: • 3-Hole 8-15" Installation

Dims:
- 5 7/8" Spout Height
- 3 13/16" Deck to Spout
- 4 17/32" Spout Reach
- 2 15/32" Max Deck Thickness

Features:
- Push & Seal™ Drain
- Adjustable Install
- Pforever Seal Ceramic Disc Valves
- Pfast Connect
- TiteSeal™ DeckPlate
- 1.2 GPM Flow Rate

Pasadena® Two Handle Widespread Lavatory Faucet	LF049PDCC	Polished Chrome	3	$216
	LF049PDKK	Brushed Nickel	3	$244

Holes: • 3-Hole 8-15" Installation

Dims:
- 5 25/32" Spout Height
- 4 7/32" Deck to Aerator
- 4 25/32" Spout Reach
- 2" Maximum Deck Thickness

Features:
- Push & Seal™ Drain
- Pfast Connect
- Quick Install™ Tool
- Push & Seal™ Drain
- Pforever Seal Ceramic Disc Valve
- 1.2 GPM Flow Rate

CEC Compliant | Cal Green Compliant | Meets EPA WaterSense | NSF Lead-Free Certified | ADA Compliant

Sonterra
Two Handle Widespread Lavatory Faucet

Model	Finish	Case Qty	List Price
LFWL8SNPC	Polished Chrome	3	$222.00

Techincal Info

Holes:
- 3-Hole 8" Installation

Dims:
- 7-7/8'' Spout Height
- 4-3/4'' Deck to Aerator
- 5-1/4'' Spout Reach
- 3'' Maximum Deck Thickness

Features:
- Push & Seal™ Drain
- TiteSeal™ DeckPlate
- Adjustable Install
- Pforever Seal Ceramic Disc Valves
- 1.2 GPM Flow Rate

Vaneri
Two Handle Widespread Lavatory Faucet

Model	Finish	Case Qty	List Price
LF049VRICC	Polished Chrome	3	$241
LF049VRIBB	Matte Black	3	$298

Holes:
- 3-Hole 8-15" Installation

Dims:
- 7-1/4'' Spout Height
- 4-3/8'' Deck to Aerator
- 4-9/16'' Spout Reach
- 2-1/8'' Maximum Deck Thickness

Features:
- 1.2 GPM Flow Rate
- Fixed Hubs
- High Arc Spout
- TiteSeal™ Technology
- Supply Lines Not Included
- Spot Defense™ Finish Resists
- Spots and Fingerprints (GS Finish Only)
- Pfast Connect™
- Push & Seal™ Pop-Up Drain
- Quick Install Tool Included
- Pforever Seal™ Ceramic Disc Valves

CEC Compliant | Cal Green Compliant | Meets EPA WaterSense | NSF Lead-Free Certified | ADA Compliant

Tub & Shower

	Model	Finish	Case Qty	List Price
Classic 1-Handle Tub & Shower Trim	8P8WS2CLCC	Polished Chrome	3	$207

Technical Info

Features:
- 1.8 GPM Flow Rate (Showerhead)
- 3 Function Showerhead (Full Spray, Massage, and Full Spray/Massage Combo)
- Concealed Screws
- Includes 0X8 Valve
- Temperature Limit Stop
- Pressure Balanced Valve Included
- Pforever Seal Ceramic Disc Valve

Ferris* Handheld Shower	8P8-WS2-FERB	Matte Black	3	$350

Features:
- Single Function Showerhead
- Easy to Clean Nozzles
- Multifunction Showerhead
- Decorative Tub Spout
- Pforever Seal Ceramic Disc Valve
- SecurePfit™ Technology with Anti Handle Wobble
- Pressure balanced valve included
- 1.8 GPM Flow Rate (Showerhead)

Fullerton™ Single Handle 0X8 Series Tub & Shower Faucet & Valve	8P8FTCC	Polished Chrome	3	$258

Features:
- Single Function Showerhead
- Easy to Clean Nozzles
- Raincan Showerhead
- Decorative Tub Spout
- Pforever Seal Ceramic Disc Valve
- SecurePfit™ Technology with Anti Handle Wobble
- Pressure balanced valve included
- 2.0 GPM Flow Rate (Showerhead)

CEC Compliant | Cal Green Compliant | Meets EPA WaterSense | NSF Lead-Free Certified | ADA Compliant

Karci*
Single Handle OX8 Series Tub & Shower with Hand Shower

Model	Finish	Case Qty	List Price
8P8WS2HKASC	Polished Chrome	3	$328
8P8WS2HKASB	Matte Black	3	$385

Technical Info

Features:
- Easy to Clean Nozzles
- 3-Function Showerhead
- Pforever Seal ceramic disc valve
- Quick Connect Tub Spout
- SecurePfit™ Technology with Anti Handle Wobble
- Pressure balanced valve included
- Temperature Limit Stop
- 1.8 GPM Flow Rate (Showerhead)

* Retailer exclusive product, available for special order only.

CEC Compliant | Cal Green Compliant | Meets EPA WaterSense | NSF Lead-Free Certified | ADA Compliant

Penn
Single Handle 0X8 Series Tub & Shower Faucet and Valve

Model	Finish	Case Qty	List Price
8P8PESC	Polished Chrome	1	$345
8P8PESB	Matte Black	1	$409

Techincal info

Features:
- Single Function-Showerhead
- Pforever Seal ceramic disc valve
- Quick Connect Tub Spout
- SecurePfit™ Technology with Anti Handle Wobble
- Pressure balanced valve included
- Temperature Limit Stop
- 2.5 GPM Flow Rate (Showerhead)

Rancho
Single Handle 0X8 Series Tub & Shower Faucet and Valve

8P8WS2RCHSC	Polished Chrome	3	$330
8P8WS2RCHSB	Matte Black	3	$391

Features:
- 3-Function Showerhead
- Easy to Clean Nozzles
- Spot Defense Finish (GS Finishes only)
- Pforever Seal ceramic disc valve
- Quick Connect Tub Spout
- SecurePfit™ Technology with Anti Handle Wobble
- Pressure balanced valve included
- Temperature Limit Stop
- 1.8 GPM Flow Rate (Showerhead)

Rancho
Handheld Tub & Shower Trim

8P8HRCHSC	Polished Chrome	3	$354
8P8HRCHSB	Matte Black	3	$437

Features:
- 3-Function Showerhead
- Restore™ Spray Technology
- Pforever Seal ceramic disc valve
- Easy to Clean Nozzles
- Full Spray & Massage Combo
- Quick Connect Tub Spout
- SecurePfit™ Technology with Anti Handle Wobble
- Includes complete valve, cartridge and trim
- 2.5 GPM Flow Rate (Showerhead)

CEC Compliant | Cal Green Compliant | Meets EPA WaterSense | NSF Lead-Free Certified | ADA Compliant

	Model	Finish	Case Qty	List Price
Raya 1-Handle Tub & Shower Trim	8P8CRYSSDB	Matte Black	1	$477

Techincal Info

Features:
- 2.5 GPM Flow Rate
- (Handheld & Showerhead)
- Combo Showerhead with Magnetic Docking Handheld
- 60" Hose Length
- Brass Ball Joint
- 6 Function Showerhead Full Spray, Massage, Full/Massage Combo, Invigorating Spray, HyrdoFuse™, and Pause)
- SecurePfit™ with Anti Handle Wobble
- Includes 0X8 Valve
- Pressure Balanced Valve Included
- Quick Connect Tub Spout
- Temperature Control
- Temperature Limit Stop
- Wipe Clean™ Nozzles
- Pforever Seal™ Ceramic Disc Valve

Solita® Single Handle 0X8 Series Tub & Shower Faucet and Valve	8P8SOCC	Polished Chrome	1	$258

Features:
- Metal Lever Handle
- 5-Function Handheld Shower Showerhead
- 72" PVC Hose
- Pressure balanced valve included
- Pforever Seal Ceramic Disc Valve
- 2.5 GPM Flow Rate (Handshower)

Vaneri ™ Single Handle 0X8 Series Tub & Shower Faucet and Valve	8P8WS2VRISCC	Polished Chrome	3	$259
	8P8WS2VRISBB	Matte Black	3	$373

Features:
- 1.75 GPM Flow Rate (Showerhead)
- Raincan Showerhead
- Brass Ball Joint
- Includes 0X8 Valve
- Spot Defense™ Finish Resists Spots and Fingerprints (GS Finish Only)
- Wipe Clean Nozzles
- SecurePfit™ with AntiHandle Wobble
- Temperature Limit Stop
- Quick Connect Tub Spout
- Push Button Diverting Tub Spout
- Pressure Balanced Valve Included
- Pforever Seal™ Ceramic Disc Valve

CEC Compliant | Cal Green Compliant | Meets EPA WaterSense | NSF Lead-Free Certified | ADA Compliant

	Model	Finish	Case Qty	List Price
Eco Showerhead	015EP1C	Polished Chrome	4	$29

Technical Info

Features:
- Adjustable Spray
- 2-Function Showerhead
- Arm/Flange Not Included
- 1.5 GPM Flow Rate

Universal Trim Showerhead	015TD1K	Brushed Nickel	4	$78

5

Technical Info

Features:
- 5 Function Showerhead
- Arm/Flange Not Included
- 2.5 GPM Flow Rate

Thermoforce Showerhead	015WS2THCC	Polished Chrome	4	$63

6

Features:
- Easy to Clean Nozzles
- 6-Function Showerhead
- Thermoforce™ Spray Technology
- Arm/Flange Not Included
- 1.8 GPM Flow Rate

	Model	Finish	Case Qty	List Price
Universal Trim Showerhead	015TN1C	Polished Chrome	4	$32

5

Technical Info

Features:
- 5-Function Showerhead
- Easy to Clean Nozzles
- Arm/Flange Not Included
- 2.5 GPM Flow Rate

CEC Compliant

Cal Green Compliant

Meets EPA WaterSense

NSF Lead-Free Certified

ADA Compliant

	Model	Finish	Case Qty	List Price
HydroFuse™ 6 Function Showerhead	015-HF01CC	Polished Chrome	3	$68

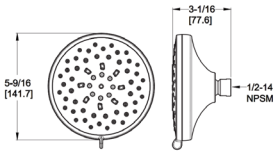

Technical Info

Features:
- 2.5 GPM Flow Rate
- Arm/Flange Not Included
- Easy to Clean Nozzles
- Spot Defense™ Finish Resists
- Spots and Fingerprints
- (GS & SDB Finishes Only)
- Multiple Function Showerhead
- (6 Functions: Full Spray, Full/Massage Combo, Massage, Pause, HydroFuse™, and HydroFuse™/Full Combo)
- Limited Lifetime Warranty

	Model	Finish	Case Qty	List Price
HydroFuse™ Handheld Shower with MagnePfit	016-HFM01CC	Polished Chrome	3	$93
	016-HFM01GS	Spot Defense Brushed Nickel	3	$124
	016-HFM01SDB	Spot Defense Matte Black	3	$144

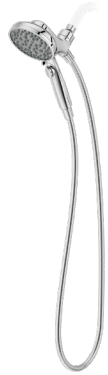

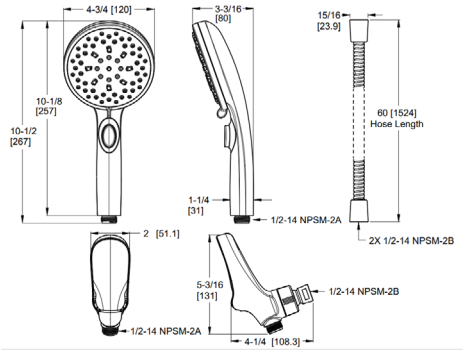

Features:
- 2.5 GPM Flow Rate
- Arm/Flange Not Included
- 60" Metal Hose
- Easy to Clean Nozzles
- Spot Defense™ Finish Resists
- Spots and Fingerprints
- (GS & SDB Finishes Only)
- • Multiple Function Handheld
- (6 Functions: Full Spray, Full/Massage Combo, Massage, Pause, HydroFuse™, and HydroFuse™/Full Combo)
- Pause Button Feature
- Limited Lifetime Warranty

	Model	Finish	Case Qty	List Price
HydroFuse™ Combo with Handheld Shower with MagnePfit	020-HFM01CC	Polished Chrome	3	$184
	020-HFM01GS	Spot Defense Brushed Nickel	3	$204
	020-HFM01SDB	Spot Defense Matte Black	3	$243

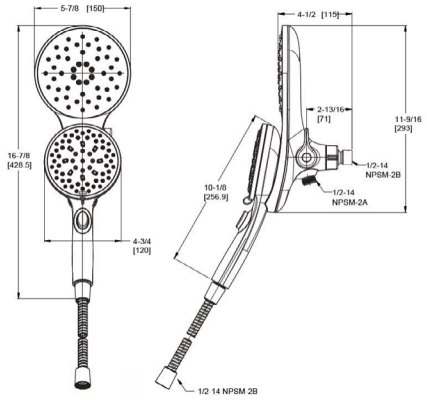

Features:
- 2.5 GPM Flow Rate
- Arm/Flange Not Included
- 60" Metal Hose
- Easy to Clean Nozzles
- Spot Defense™ Finish Resists
- Spots and Fingerprints
- (GS & SDB Finishes Only)
- • Multiple Function Handheld
- (6 Functions: Full Spray, Full/Massage Combo, Massage, Pause, HydroFuse™, and HydroFuse™/Full Combo)
- Pause Button Feature
- Limited Lifetime Warranty

CEC Compliant | Cal Green Compliant | Meets EPA WaterSense | NSF Lead-Free Certified | ADA Compliant

	Model	Finish	Case Qty	List Price
Restore 2.5GPM Handshower and Hose	016RSCC	Polished Chrome	4	$101

3

Technical Info

Features:
- 3-Function Showerhead
- Easy to Clean Nozzles
- Restore™ Spray Technology
- Arm/Flange Not Included
- 60" Hose Included
- 2.5 GPM Flow Rate

Penn Showerhead	016-PEB	Matte Black	4	$110

5

Features:
- 3-Function Showerhead
- Easy to Clean Nozzles
- Arm/Flange Not Included
- 60" Hose Included
- 2.5 GPM Flow Rate

Vie 2.5GPM Handshower and Hose	016VICC	Polished Chrome	4	$83

5

Features:
- 5-Function Showerhead
- Easy to Clean Nozzles
- HydroDrench™ Spray Technology
- Arm/Flange Not Included
- 60" Hose Included
- 2.5 GPM Flow Rate

CEC Compliant

Cal Green Compliant

Meets EPA WaterSense

NSF Lead-Free Certified

ADA Compliant

	Model	Finish	Case Qty	List Price
Square - Slide Bar	016HH14C	Polished Chrome	3	$225

Technical Info

Features:
- 72" Mylar hose
- Easy to Clean Nozzles
- Raincan Showerhead
- 3 Way Diverter: Allows the use of handshower, showerhead or both at the same time
- Adjustable cradle for hand shower height
- Includes Showerhead, Handshower, Arm, Flange, Slidebar with Cradle, Diverter and Hose
- 2.5 GPM Flow Rate

Square - Slide Bar *	016HH15C	Polished Chrome	3	$230

Features:
- Easy to Clean Nozzles
- 60" Anti-Twist metal hose
- Raincan Showerhead
- 3 Way Diverter: Allows the use of handshower, showerhead or both at the same time
- Adjustable cradle for hand shower height
- Includes Showerhead, Handshower, Arm, Flange, Slidebar with Cradle, Diverter and Hose
- 2.5 GPM Flow Rate

CEC Compliant | Cal Green Compliant | Meets EPA WaterSense | NSF Lead-Free Certified | ADA Compliant

Bath Accessories

	Model	Finish	Case Qty	List Price
18″ Towel Bar	BTBBC1K	Brushed Nickel	3	$85
	BTBBC1B	Matte Black	3	$99

Technical Info

Holes: • 2-Hole

Features:
- All Metal Construction
- Standard Mounting Bracket
- Concealed Screw Installation
- Mounting Hardware Included
- Invisihook

24″ Towel Bar	BTBBC2K	Brushed Nickel	3	$95
	BTBBC2B	Matte Black	3	$109

Holes: • 2-Hole

Features:
- All Metal Construction
- Standard Mounting Bracket
- Concealed Screw Installation
- Mounting Hardware Included
- Invisihook

Towel Ring	BRBBC0K	Brushed Nickel	3	$41
	BRBBC0B	Matte Black	3	$66

Holes: • 2-Hole

Features:
- All Metal Construction
- Standard Mounting Bracket
- Concealed Screw Installation
- Mounting Hardware Included

Paper Holder	BPHBC0K	Brushed Nickel	3	$63
	BPHBC0B	Matte Black	3	$74

Holes: • 2-Hole

Features:
- All Metal Construction
- Standard Mounting Bracket
- Concealed Screw Installation
- Mounting Hardware Included

Robe Hook	BRHBCKK	Brushed Nickel	3	$43
	BRHBCBB	Matte Black	3	$51

Holes: • 2-Hole

Features:
- All Metal Construction
- Standard Mounting Bracket
- Concealed Screw Installation
- Mounting Hardware Included

3-Piece Kit	BTBBC3K	Brushed Nickel	3	$188
	BTBBC3B	Matte Black	3	$214

Features:
- Includes: 18″ Towel Bar, Paper Holder and Towel Ring

18" Towel Bar

Model	Finish	Case Qty	List Price
BTBFT1C	Polished Chrome	2	$60
BTBFT1GS	Spot Defense	2	$64
BTBFT1B	Matte Black	2	$67
BTBFT1BG	Brushed Gold	2	$96

Technical Info

Holes: • 2-Hole

Features:
- Concealed screw installation
- Superior mounting posts for secure installation

24" Towel Bar

Model	Finish	Case Qty	List Price
BTBFT2C	Polished Chrome	3	$66
BTBFT2GS	Spot Defense	3	$70
BTBFT2B	Matte Black	3	$72
BTBFT2BG	Brushed Gold	3	$102

Holes: • 2-Hole

Features:
- Concealed screw installation
- Superior mounting posts for secure installation

Towel Ring

Model	Finish	Case Qty	List Price
BRBFT0C	Polished Chrome	3	$48
BRBFT0GS	Spot Defense	3	$50
BRBFT0B	Matte Black	3	$52
BRBFT0BG	Brushed Gold	3	$73

Holes: • 1-Hole

Features:
- Concealed screw installation
- Superior mounting posts for secure installation

Paper Holder

Model	Finish	Case Qty	List Price
BPHFT0C	Polished Chrome	3	$58
BPHFT0GS	Spot Defense	3	$60
BPHFT0B	Matte Black	3	$62
BPHFT0BG	Brushed Gold	3	$85

Holes: • 2-Hole

Features:
- Concealed screw installation
- Superior mounting posts for secure installation

Robe Hook

Model	Finish	Case Qty	List Price
BRHFT0C	Polished Chrome	3	$31
BRHFT0GS	Spot Defense	3	$35
BRHFT0B	Matte Black	3	$37
BRHFT0BG	Brushed Gold	3	$52

Holes: • 1-Hole

Features:
- Concealed screw installation
- Superior mounting posts for secure installation

3-Piece Kit

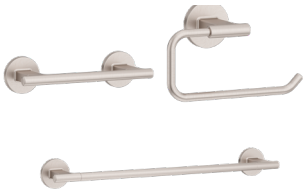

Model	Finish	Case Qty	List Price
BTBFT3C	Polished Chrome	3	$158
BTBFT3GS	Spot Defense	3	$171
BTBFT3B	Matte Black	3	$176
BTBFT3BG	Brushed Gold	3	$245

Features:
- Includes: 24" to 18" Towel Bar, Paper Holder and Towel Ring
- Concealed screw installation
- Superior mounting posts for secure installation

	Model	Finish	Case Qty	List Price	Technical Info
18″ Towel Bar	BTBMD1C	Polished Chrome	3	$90	Holes: • 2-Hole Features: • All Metal Construction • Standard Mounting Bracket • Concealed Screw Installation • Mounting Hardware Included
24″ Towel Bar	BTBMD2C	Polished Chrome	3	$99	Holes: • 2-Hole Features: • All Metal Construction • Standard Mounting Bracket • Concealed Screw Installation • Mounting Hardware Included
24″ Double Towel Bar	BTBMD5C	Polished Chrome	3	$206	Holes: • 2-Hole Features: • All Metal Construction • Standard Mounting Bracket • Concealed Screw Installation • Mounting Hardware Included
Towel Ring	BRBMD1C	Polished Chrome	3	$61	Holes: • 1-Hole Features: • All Metal Construction • Standard Mounting Bracket • Concealed Screw Installation • Mounting Hardware Included
Paper Holder	BPHMD1C	Polished Chrome	3	$47	Holes: • 2-Hole Features: • All Metal Construction • Standard Mounting Bracket • Concealed Screw Installation • Mounting Hardware Included
Robe Hook	BRHMD1C	Polished Chrome	3	$24	Holes: • 1-Hole Features: • All Metal Construction • Standard Mounting Bracket • Concealed Screw Installation • Mounting Hardware Included
3-Piece Kit	BTBMD3C	Polished Chrome	3	$151	Features: • Includes: 24" Towel Bar, Paper Holder and Towel Ring

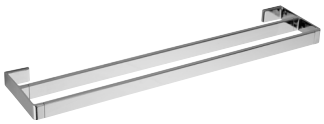

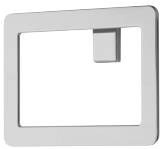

Vaneri 3-Piece Kit

Model	Finish	Case Qty	List Price
BTBVRI3GS	Brushed Nickel	3	$136
BTBVRI3B	Matte Black	3	$151

Technical Info

Features:
- Includes: 18" Towel Bar, Paper Holder, and Towel Ring
- Mounting Hardware Included
- Spot Defense™ Finish Resists Spots and Fingerprints
- Pivots to Load and Unload Paper (Paper Holder Only)

Push & Seal Drain

Model	Finish	Case Qty	List Price
S47PSCC	Polished Chrome	3	$24
S47PSKK	Brushed Nickel	3	$27
S47PSYY	Tuscan Bronze	3	$30
S47PSSDB*	Spot Defense Matte Black	3	$45
S47PSBG*	Brushed Gold	3	$50

Technical Info

Features:
- Quick Installation; No Tools Required
- Easy to Use: Simply Press to Seal & Open
- Guaranteed Tight Seal, Even Overnight
- Easy to Access Drain Pipe, Simply Unscrew and Remove Stopper

*Launching Q2 2026