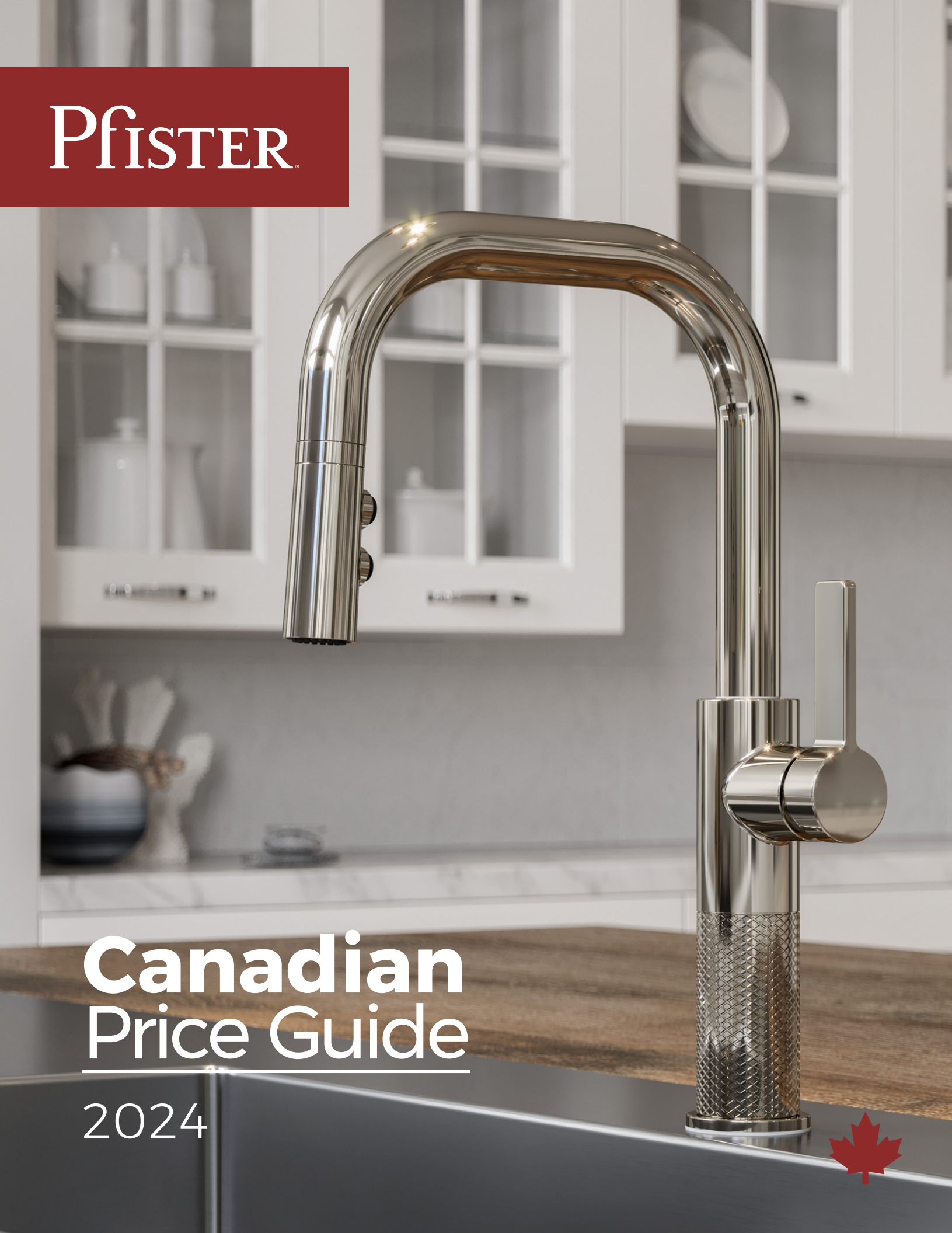

PFISTER

Canadian Price Guide

2024

TABLE OF CONTENTS

Kitchen
PAGE K-1

Bath
PAGE B-1

Accessories
PAGE A-1

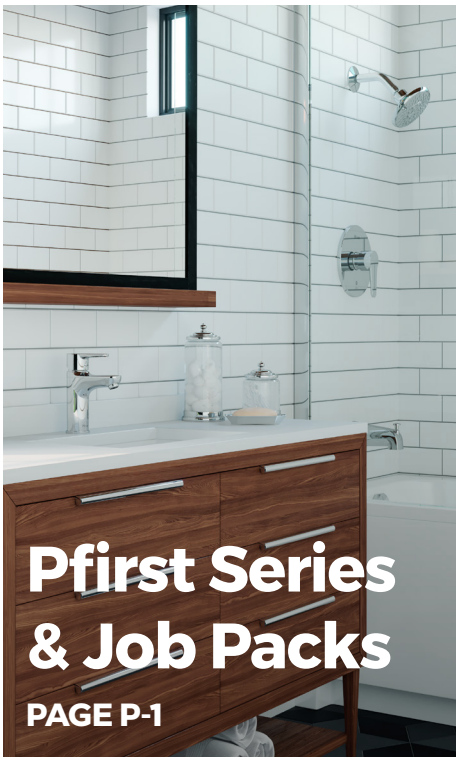
Pfirst Series & Job Packs
PAGE P-1

Valves
PAGE V-1

Retail Products
PAGE R-1

Kitchen

CULINARY

Bruton™
Page K-6

Zuri™
Page K-6

PULL-DOWNS

Brislin
Page K-2

Montay™
Page K-2

Neera™
Page K-3

Norden™
Page K-3

Pfirst Series
Page K-4

Port Haven™
Page K-4

Stellen™
Page K-5

TECHNOLOGY

Electronic

Stellen™ with React™
Page K-5

PULL-OUTS

Arkitek™
Page K-7

Pfirst Series
Page K-7

SINGLE CONTROL

Pfirst Series
Page P-2

TWO HANDLE

Pfirst Series
Page P-4

BAR/PREP

Montay
Page K-9

Port Haven
Page K-9

Stellen
Page K-9

BRIDGE

Port Haven™
Page K-7

POT FILLERS

Lita
Page K-10

Port Haven
Page K-10

SOAP DISPENSERS

Modern
Page K-11

Pfister
Page K-11

Pfister
Page K-11

Bath

Brislin™
Page B-24

Contempra®
Page B-29

Deckard™
Page B-40

Kenzo™
Page B-52

Rhen™
Page B-62

Tenet™
Page B-74

Tisbury™
Page B-86

Weller™
Page B-96

Pfirst Modern
Page P-5

Pfirst Series
Page P-5

We are Pfister.

For more than a century, families have been welcoming Pfister into their homes. We have become their partners through and through. We are willing to serve. Happy to help.

Never will you be hung out to dry. Never will your budget keep you from finding the style you'll love. Never will we stop searching for ways to improve your everyday experience.

We're faucet people. Real, humble, and hard-working. We know what you want out of a faucet, because we know what we'd want out of a faucet.

We put our hearts into everything we do, creating thoughtfully designed faucets and fixtures that fit perfectly into your life – because we believe everyone deserves to fill their home with style and quality no matter what their budget.

Pfister Pfinish Options

Finish	Faucet Finish Code	Parts Finish Code
Polished Chrome	C	A
Stainless Steel	S	S
Spot Defense	GS	GS
Brushed Nickel	K	J
Polished Nickel	D	D
Tuscan Bronze	Y	Y
Rustic Bronze	U	U
Matte Black	B	B
Brushed Gold	BG	BG

React™

Response Activated Technology

Pfister's REACT faucets put you in charge when things get hectic in the kitchen. Simply guide your hand or an object within 3" of the front of the sensor to turn the water on or off. Minimize water spots, fingerprints, and the spread of germs with this reliable, touch-free faucet.

MagnePfit™

Pfister's MagnePfit magnetic docking features powerful magnets that keep your spray head firmly secured. The magnets work in conjunction with the heavy weight located on the hose to provide quick retraction while the magnets work to keep your spray head secured and looking seamless.

Auto-Align™

Manually aligning your spray head after each use can be a real pain. Auto-Align simplifies that process for you by removing the need for manual alignment and positioning. Threaded grooves are subtly located at the base of the spray head and work with corresponding grooves inside the spout to re-orient the spray head for perfect positioning.

Ultra Seal™

Pfister's UltraSeal cartridge is a premium upgrade to your showroom preferred faucet offering you lifelong protection against leaks. Pfister ensures the strongest connection point to the handle with larger ceramic discs and an all-brass ¼-turn cartridge technology. UltraSeal cartridges can be retrofitted into most existing widespread faucets.

Accudock™

AccuDock is Pfister's advanced sprayhead docking technology which ensures a secure, tight connection of the spray head to the faucet spout every time. The AccuDock technology guarantees the spray head will stay securely in place after every use.

PUSH&SEAL™

DRAIN INNOVATION

Push & Seal is an innovative drain assembly that is easy to install and even easier to use. No tools are required, and it installs in half the time of a standard pop-up drain. Press to seal and again to open. It really is that easy.

Icon Legend

Core Offering

All kitchen and lavatory products with a star beside the model number are part of Pfister's Core Offerings list in Canada.

Meets EPA WaterSense℠ Standards

All items with the WaterSense℠ logo to the left of the model numbers meet or exceed the certification criteria of the EPA's WaterSense Program.

NSF Lead-Free Certified

All kitchen and lavatory model numbers starting with the prefix "GT" or "LG" meet NSF 61/9 Annex G Lead Requirements.

ADA Compliant

Models displaying the International Symbol of Accessibility are accessible by physically disadvantaged persons and meet all ADA/ANSI A117.1 requirements.

CalGreen Compliant

All items with this logo meet or exceed the flow rate criteria of the California Green Building Code.

CEC Compliant

All model numbers beginning with LG, G and GT's meet the requirements of the California Energy Commission.

UltraSeal™

All items with this logo include brass 1/4-turn cartridge and ceramic disc technology for lifelong leak-free operation. Retrofits into most existing widespread valve bodies.

SecurePfit™

All items with this logo include a unique fixed -hub handle which threads directly to the valve cartridge for significant structural rigidity.

WaterSense℠

We went green more than a decade ago. Our initiative with products that were certified by the Environmental Protection Agency's WaterSense program started in 2007, long before others heeded the call. Faucets engineered to reduce water consumption by 30% or more — without sacrificing performance — were crucial to us as good citizens. We'll continue to create innovations that support conscientious households, and the future of our planet.

CEC Compliant

Less usage never felt so good. With Pfister faucets, being water-wise requires no sacrifice. In fact, meeting the California Energy Commission's standards is likely unnoticeable on a daily basis. What you do know is that your shower head meets the strict WaterSense performance guidelines and that you're using significantly less water without any extra effort. Hooray for innovation that's effective and enjoyable!

CalGreen Compliant

We got this. Many Pfister products already meet or exceed the California Green Building Code. Which means that we've committed to reduce the overall use of potable water within any given building by at least 20%. This stringent measurement meets Cal Green criteria, but we're always improving to exceed current standards. Future generations can count on us.

Water Conservation

Pfister makes it easy to conserve water. Eco-Pfriendly™ aerators and inserts are available for Kitchen, Lavatory and Showerhead products. Locate your product on the following charts to choose the correct option for your water conserving needs.

Kitchen		0.5 gpm Spare Part SKU#				1.0 gpm Spare Part SKU#						1.5 gpm Spare Part SKU#			
Family	**Series**	**941-4320**	**941-8180**	**941-8190**	**941-8200**	**941-4440**	**941-4450**	**941-4500**	**941-6820**	**941-7069**	**941-3720**	**941-6830**	**941-7079**	**941-7850**	**941-7870**
Arkitek	LG-534	•				•			•			•			
Brislin	GT-529		•					•							•
Bruton	GT-529		•					•							•
Montay	GT-529		•					•							•
Neera	LG-529				•					•			•		
Norden	GT-529	•				•						•			
Pfirst Series	G133-1										•				
Pfirst Series	G134-1										•				
Pfirst Series	G134-3										•				
Pfirst Series	G134-5			•			•							•	
Pfirst Series	G134-6			•			•							•	
Pfirst Series	G134-7			•			•							•	
Pfirst Series	G135-7			•			•							•	
Pfirst Series	G136-2			•			•							•	
Pfirst Series	G136-5			•			•							•	
Pfirst Series	G127			•			•							•	
Pfirst Series	G171-40			•			•							•	
Pfirst Series	G529				•	•				•		•	•		
Port Haven	G-529	•				•						•			
Port Haven	GT-572	•				•						•			
Port Haven	LG-31				•					•			•		
Port Haven	GT-31				•					•			•		
Stellen	LG-529		•					•							•
Stellen	LG-529-E		•					•							•
Stellen	LG-572		•					•							•
Zuri	GT-529-MP				•					•			•		
Zuri	LG-529-MC				•					•			•		

Lavatory		0.35 GPM Spare Part SKU#						0.5 GPM Spare Part SKU #						1.0 GPM Spare Part SKU#					
Family	**Series**	**941-4360**	**941-4370**	**941-4380**	**941-4390**	**941-4410**	**941-7109**	**941-4320**	**941-4340**	**941-8180**	**941-8190**	**941-8200**	**941-7099**	**941-4420**	**941-4440**	**941-4480**	**941-4500**	**941-6630**	**941-7069**
Brislin	LG-42	•							•					•					
Deckard	LG-42						•						•					•	
Deckard	LG-49						•						•					•	
Contempra	LG-40/ LG-42					•				•							•		
Contempra	LG-49					•				•							•		
Pfirst Series	LG-142-5/6			•							•					•			
Pfirst Series	LG-142-7/8			•							•					•			
Pfirst Series	LG-143-5/6			•							•					•			
Pfirst Series	LG-143-51/61			•							•					•			
Pfirst Series	LG-148-6			•							•					•			
Pfirst Series	LG-148-7			•							•					•			
Pfirst Series	LG-149-60			•							•					•			
Pfirst Series	LG-149-6X			•							•					•			
Pfirst Modern	LG-142				•							•							•
Pfirst Modern	LG-42				•							•							•
Rhen	LG-42		•								•					•			
Rhen	LG-49		•								•					•			
Tenet	LG-42		•					•							•				
Tenet	LG-49		•					•							•				
Tenet	LG-42		•					•							•				
Tenet	LG-49		•					•							•				
Tisbury	LG-42	•							•					•					
Tisbury	LG-49	•							•					•					
Weller	LG-42		•					•							•				
Weller	LG-48		•					•							•				
Weller	LG-49	•							•					•					

Water Conservation – Kitchens

Eco-Pfriendly™ Aerator
1.75 gpm Aerator Insert

Model	Finish	Case Qty	List Price
941-292Ø	N/A	1	$6.34
941-293Ø	N/A	1	$6.34

Eco-Pfriendly™ Aerator
1.5 gpm Aerator Insert

Model	Finish	Case Qty	List Price
941-683Ø	N/A	1	$7
941-7Ø79	N/A	1	$7
941-785Ø	N/A	1	$6.24
941-787Ø	N/A	1	$6.34

Eco-Pfriendly™ Aerator
1.0 gpm Aerator Insert

Model	Finish	Case Qty	List Price
941-444Ø	N/A	1	$7
941-448Ø	N/A	1	$7
941-682Ø	N/A	1	$7
941-7Ø69	N/A	1	$7

Eco-Pfriendly™ Aerator
0.5 gpm Aerator Insert

Model	Finish	Case Qty	List Price
941-818Ø	N/A	1	$9.72
941-819Ø	N/A	1	$7
941-82ØØ	N/A	1	$6.24

Water Conservation - Lavatory Faucets

Eco-Pfriendly™ Aerator
0.35 gpm Aerator Insert

Model	Finish	Case Qty	List Price
941-436Ø	N/A	1	$7
941-437Ø	N/A	1	$7
941-438Ø	N/A	1	$7
941-439Ø	N/A	1	$7
941-441Ø	N/A	1	$7

Eco-Pfriendly™ Aerator
0.5 gpm Aerator Insert

Model	Finish	Case Qty	List Price
941-432Ø	N/A	1	$7
941-434Ø	N/A	1	$7
941-818Ø	N/A	1	$9.72
941-819Ø	N/A	1	$7
941-82ØØ	N/A	1	$6.24

Eco-Pfriendly™ Aerator
1.0 gpm Aerator Insert

Model	Finish	Case Qty	List Price
941-442Ø	N/A	1	$7
941-444Ø	N/A	1	$7
941-445Ø	N/A	1	$7
941-448Ø	N/A	1	$7
941-45ØØ	N/A	1	$7
941-663Ø	N/A	1	$10.01
941-7Ø69	N/A	1	$7

Water Conservation - Handheld & Showerheads

1.75 gpm Eco Pfriendly™ Showerhead Insert

Model	Finish	Case Qty	List Price
941-377Ø	N/A	1	$6.24

1.5 gpm Eco Pfriendly™ Showerhead Insert

Model	Finish	Case Qty	List Price
941-Ø55Ø	N/A	1	$7.52

KITCHEN

Pull-Down K-2

React™ K-5

Culinary K-6

Pull-Out K-7

Bridge K-7

Bar & Prep K-8

Pot Filler/Laundry K-10

Soap Dispensers K-11

Pull-Down Kitchen Faucets

Brislin
1-Handle Pull-Down Kitchen Faucet

	Model	Finish	Case Qty	List Price
★	GT529-BIC	Polished Chrome	3	$230
	GT529-BIS	Stainless Steel	3	$259
	GT529-BID	Polished Nickel	3	$274
★	GT529-BIB	Matte Black	3	$288

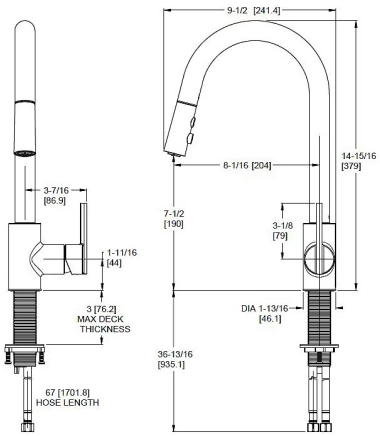

Technical Info

Holes: · 1 or 3-Hole Installation

Features:
- 1.8 GPM Flow Rate
- 13.5" Pull-Down Hose Length
- Nylon Braided Hose
- 2 Function PullDown Sprayer (Spray and Stream)
- Auto-Align™Sprayhead Docking
- 36 in Nylon Flex-Line Supply Lines
- Forward Handle Operation
- 360 Degree Rotating Spout
- High Arc Spout
- Pfast Connect
- TiteSeal™ Technology
- Optional 3-Hole Installation Deck Plate Available, Order 961-276* Separately
- Pforever Seal Ceramic Disc Valve

Deckplate Model	Finish	List Price
961-276A	Polished Chrome	$40
961-276S	Stainless Steel	$45
961-276D	Polished Nickel	$50
961-276B	Matte Black	$58

Montay™
1-Handle Pull-Down Kitchen Faucet

★	GT529-MTC	Polished Chrome	3	$535
★	GT529-MTS	Stainless Steel	3	$601
	GT529-MTD	Polished Nickel	3	$601
★	GT529-MTB	Matte Black	3	$639
	GT529-MTBG	Brushed Gold	3	$641

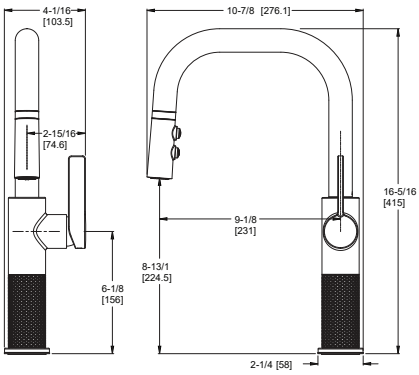

Holes: · 1-Hole Installation

Features:
- 1.8 GPM Flow Rate
- 13.5" Pull-Down Hose Length
- Nylon Braided Hose
- 2 Function PullDown Sprayer (Spray and Stream)
- MagnePfit™Sprayhead Docking
- Auto-Align™Sprayhead Docking
- 36 in Nylon Flex-Line Supply Lines
- Forward Handle Operation
- 360 Degree Rotating Spout
- High Arc Spout
- Pfast Connect
- TiteSeal™ Technology
- Optional 3-Hole Installation Deck Plate Available, Order 961-258* Separately
- Pforever Seal Ceramic Disc Valve

Deckplate Model	Finish	List Price
961-258A	Polished Chrome	$38
961-258S	Stainless Steel	$43
961-258D	Polished Nickel	$50
961-258B	Matte Black	$56
961-258BG	Brushed Gold	$62

★ Core Offering · CEC Compliant · Cal Green Compliant · NSF Lead-Free Certified · ADA Compliant · Accudock™

Neera™
1-Handle Pull-Down Faucet

Model	Finish	Case Qty	List Price
LG529-NEC	Polished Chrome	3	$350
LG529-NES	Stainless Steel	3	$403
LG529-NEB	Matte Black	3	$467
LG529-NEBG	Brushed Gold	3	$489

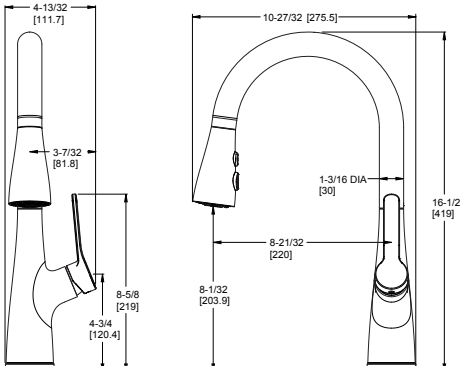

Technical Info

Holes: · 1-Hole Installation

Features:
- Optional 3-Hole Installation Deck Plate Available, Order 961-2Ø1* Separately
- 1-hole installation
- High arc spout for added clearance and reach
- 3 Function Pull-Down Sprayer (Spray, Stream and Pause)
- Advanced spray head docking system ensures a secure, tight connection to the faucet spout
- 1.8 GPM Flow Rate

Deckplate Model	Finish	List Price
961-2Ø1A	Polished Chrome	$40
961-2Ø1S	Stainless Steel	$44
961-2Ø1B	Matte Black	$49
961-2Ø1BG	Brushed Gold	$54

Norden™
1-Handle Pull-Down Kitchen Faucet

GT529-NRC	Polished Chrome	3	$450
GT529-NRS	Stainless Steel	3	$501
GT529-NRB	Matte Black	3	$555

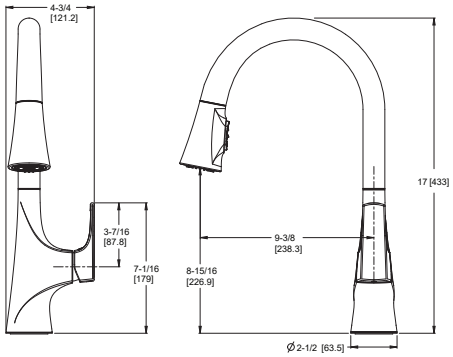

Holes: · 1-Hole Installation

Features:
- 1.8 GPM Flow Rate
- 13.5" Extended Hose Length
- Nylon Braided Hose
- 3 Function Pull-Down Sprayer (Spray, Stream, and Hydroblade™)
- Auto Align Magnetic Spray Head Docking
- 36 in Nylon Flex-Line Supply Lines
- Forward Handle Operation
- 360 Degree Rotating Spout
- High Arc Spout
- Optional Soap Dispenser Available, Order KSD-SRD* Separately
- Optional 3-Hole Installation Deck Plate Available, Order 961-168* Separately
- Pforever Seal Ceramic Disc Valve

Deckplate Model	Finish	List Price
961-168A	Polished Chrome	$28
961-168S	Stainless Steel	$33
961-168B	Matte Black	$45

Core Offering · CEC Compliant · Cal Green Compliant · NSF Lead-Free Certified · ADA Compliant · Accudock™

Pull-Down Kitchen Faucets

Pfirst Series™
1-Handle Pull-Down Kitchen Faucet

Model	Finish	Case Qty	List Price
★ G529-PF2C	Polished Chrome	3	$230
★ G529-PF2S	Stainless Steel	3	$259
G529-PF2Y	Tuscan Bronze	3	$288
★ G529-PF2B	Matte Black	3	$288

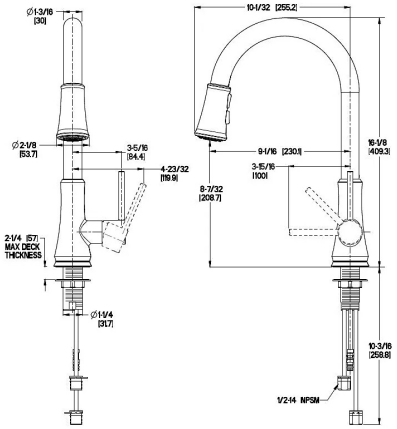

Technical Info

Holes: · 1-Hole Installation

Features:
- 1.8 GPM Flow Rate
- 13.5" Pull-Down Hose Length
- Nylon Braided Hose
- 3 Function Pull-Down Sprayer (Spray, Stream,and Hydroblade™)
- Pfast Connect
- Forward Handle Operation
- High Arc Spout
- Optional 3-Hole Installation Deck Plate Available, Order 961-25Ø* Separately
- Pforever Seal Ceramic Disc Valve

Deckplate Model	Finish	List Price
961-25ØA	Polished Chrome	$24
961-25ØS	Stainless Steel	$27
961-25ØY	Tuscan Bronze	$33
961-25ØB	Matte Black	$33

Port Haven™
1-Handle Pull-Down Kitchen Faucet

GT529-TDC	Polished Chrome	3	$528
GT529-TDS	Stainless Steel	3	$588
GT529-TDD	Polished Nickel	3	$637
GT529-TDY	Tuscan Bronze	3	$632
GT529-TDBG	Brushed Gold	3	$637

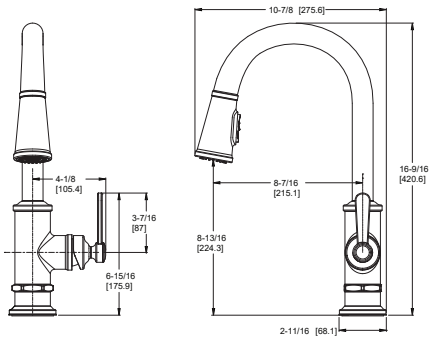

Holes: · 1-Hole Installation

Features:
- 1.8 GPM Flow Rate
- 13.5" Pull-Down Hose Length
- Nylon Braided Hose
- 3 Function Pull-Down Sprayer (Spray, Stream,and Hydroblade™)
- Auto-Align™ Sprayhead Docking
- MagnePfit™ Sprayhead Docking
- 36 in Nylon Flex-Line Supply Lines
- Forward Handle Operation
- 360 Degree Rotating Spout
- High Arc Spout
- Optional Soap Dispenser Available, Order KSD-SRD* Separately
- Optional 3-Hole Installation Deck Plate Available, Order 961-254* Separately
- Pforever Seal Ceramic Disc Valve

Deckplate Model	Finish	List Price
961-254A	Polished Chrome	$42
961-254S	Stainless Steel	$46
961-254D	Polished Nickel	$50
961-254Y	Tuscan Bronze	$50
961-254BG	Brushed Gold	$55

★ Core Offering · CEC Compliant · Cal Green Compliant · NSF Lead-Free Certified · ADA Compliant · Accudock™

Stellen™
1-Handle Pull-Down Kitchen Faucet

	Model	Finish	Case Qty	List Price
★	LG529-SAC	Polished Chrome	3	$345
★	LG529-SAS	Stainless Steel	3	$404
★	LG529-SAB	Matte Black	3	$519
★	LG529-SABG	Brushed Gold	3	$531

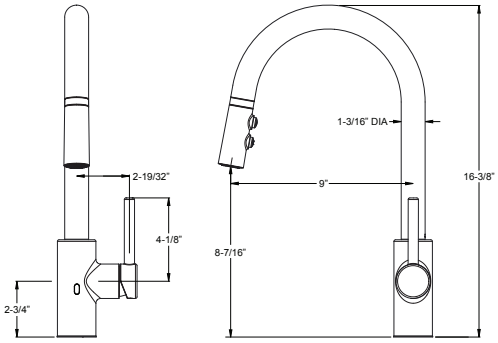

Technical Info

Holes: · 1 or 3-Hole 8" Installation

Features:
- AccuDock™ Sprayhead
- Ceramic Disc Valve
- High Arc Pull-Down Swivel Spout
- Metal Lever Handle
- Pfast Connect Supply Lines
- Three-Function Sprayhead: Stream, Spray, and Pause
- Forward Only Handle Operation
- Single Post Mounting Ring and 3-Hole Deckplate Included
- 1.8 gpm @ 60 psi

Deckplate Model	Finish	List Price
961-219A	Polished Chrome	$40
961-219S	Stainless Steel	$45
961-219B	Matte Black	$58
961-219BG	Brushed Gold	$64

Stellen™ with React™
1-Handle Touchless Kitchen Faucet

★	LG529-ESAC	Polished Chrome	3	$555
★	LG529-ESAS	Stainless Steel	3	$610
★	LG529-ESAB	Matte Black	3	$666

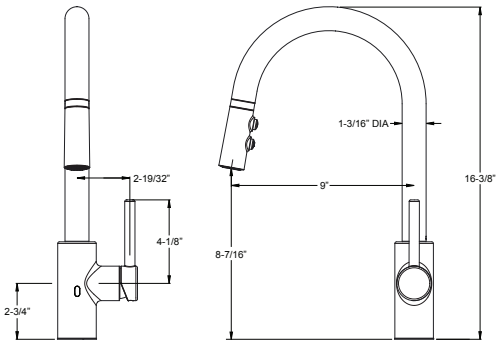

Holes: · 1 or 3-Hole 8" Installation

Features:
- React™: Touch-Free Sensor Technology
- Smartstop 3-Minute Auto Shut Off
- Temp Adjust Allows For Above Deck Temperature Control
- AccuDock™ Sprayhead
- Ceramic Disc Valve
- Pfast Connect Supply Lines
- High Arc Pull-Down Swivel Spout
- Metal Lever Handle
- Three-Function Sprayhead: Stream, Spray, and Pause
- Forward Only Handle Operation
- Single Post Mounting Ring and 3-Hole Deckplate Included
- Battery Pack (952-ØØ7Ø) Sold Separately
- 1.8 gpm @ 60 psi

Deckplate Model	Finish	List Price
961-219A	Polished Chrome	$40
961-219S	Stainless Steel	$45
961-219B	Matte Black	$58

Core Offering · CEC Compliant · Cal Green Compliant · NSF Lead-Free Certified · ADA Compliant · Accudock™

Culinary

Bruton™
Culinary Kitchen Faucet

Model	Finish	Case Qty	List Price
GT529-BRUC	Polished Chrome	3	$631
GT529-BRUS	Stainless Steel	3	$696
GT529-BRUB	Matte Black	3	$767
GT529-BRUBG	Brushed Gold	3	$837

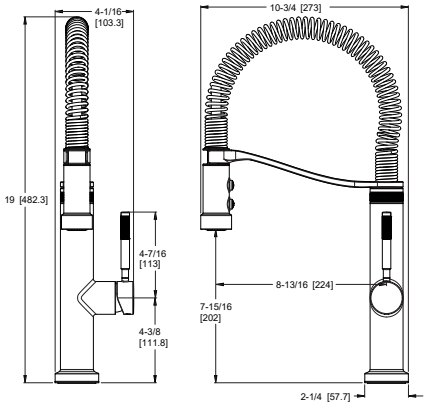

Technical Info

Holes:
- 1-Hole Installation

Features:
- 1.8 gpm Flow Rate
- 3 Function Pull-Down Sprayer (Spray, Stream, and Pause)
- 3/8" Connections
- 360˚ Rotating Spout
- 11" Pull-Down Hose Length
- Braided Nylon Hose
- MagnePfit™ Sprayhead Docking
- Forward Handle Operation
- Optional 3-Hole Installation Deck Plate Available, Order 961-258* Separately
- Nylon Flex-Line Supply Lines
- Wipe Clean™ Nozzles
- Pfast Connect™
- TiteSeal™ Technology
- Pforever Seal™ Ceramic Disc Valve

Deckplate Model	Finish	List Price
961-258A	Polished Chrome	$38
961-258S	Stainless Steel	$43
961-258B	Matte Black	$56
961-258BG	Brushed Gold	$66

Zuri™
1-Handle Pull-Down Culinary Faucet

★	LG529-MCS	Stainless Steel	3	$446

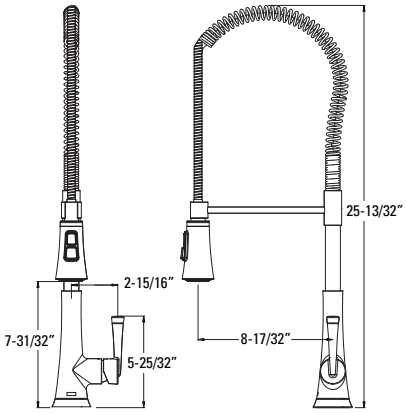

Holes:
- 1 or 3-Hole 8" Installation

Features:
- Ceramic Disc Valve
- High Arc Pull-Down Swivel Coil Spout
- Metal Lever Handle
- Pfast Connect Supply Lines
- Three-Function Sprayhead: Stream, Spray, and Pause
- Single Post Mounting Ring and 3-Hole Deckplate Included
- 1.8 gpm @ 60 psi

Core Offering | CEC Compliant | Cal Green Compliant | NSF Lead-Free Certified | ADA Compliant | Accudock™

Pull-Out Kitchen Faucets

Arkitek™
1-Handle Pull-Out Kitchen Faucet

Model	Finish	Case Qty	List Price
LG534-LPMC	Polished Chrome	3	$266
LG534-LPMS	Stainless Steel	3	$313
LG534-LPMB	Matte Black	3	$434

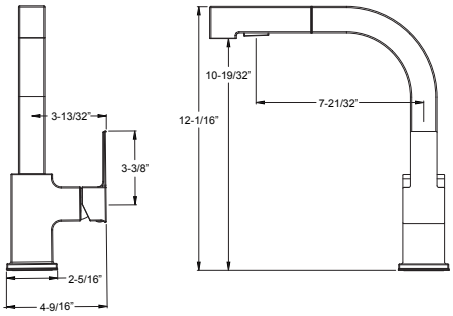

Technical Info

Holes: · 1 or 3-Hole 8" Installation

Features:
- Ceramic Disc Valve
- Metal Lever Handle
- Two-Function Sprayhead: Stream and Spray
- Forward Only Handle Operation
- Single Post Mounting Ring and 3-Hole Deckplate Included
- 1.8 gpm @ 60 psi

Deckplate Model	Finish	List Price
961-234A	Polished Chrome	$40
961-234S	Stainless Steel	$45
961-234B	Matte Black	$58

Pfirst Series™
1-Handle Pull-Out Kitchen Faucet

★	G133-10CC	Polished Chrome	3	$180
★	G133-10SS	Stainless Steel	3	$208

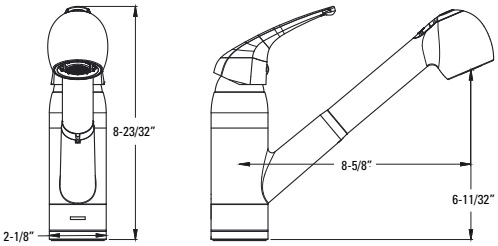

Holes: · 1 or 3-Hole 8" Installation

Features:
- Ceramic Disc Valve
- Metal Lever Handle
- Two-Function Sprayhead: Stream and Spray
- Forward Only Handle Operation
- Single Post Mounting Ring and 3-Hole Deckplate Included
- 1.8 gpm @ 60 psi

Bridge

Port Haven™
Bridge Kitchen Faucet with Side Spray

Model	Finish	Case Qty	List Price
LG31-TDC	Polished Chrome	3	$892
LG31-TDS	Stainless Steel	3	$1,020
LG31-TDD	Polished Nickel	3	$1,020
LG31-TDY	Tuscan Bronze	3	$1,053
LG31-TDBG	Brushed Gold	3	$1,091

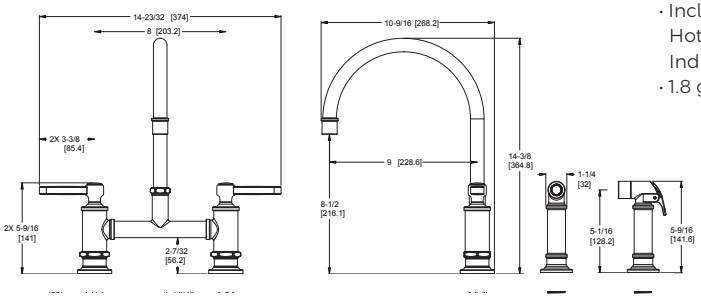

Technical Info

Holes: · 3-Hole 8" Installation

Features:
- Ceramic Disc Valves
- High Arc Pull-Down Swivel Spout
- Optional matching side sprayer included
- Metal Lever Handles
- 8" On Center
- Included Ceramic and Metal Hot and Cold Indicator Caps
- 1.8 gpm @ 60 psi

★ Core Offering · CEC Compliant · Cal Green Compliant · NSF Lead-Free Certified · ADA Compliant · Accudock™

Bar / Prep

Montay™
1-Handle Bar Kitchen Faucet

Model	Finish	Case Qty	List Price
GT572-MTC	Polished Chrome	3	$440
GT572-MTS	Stainless Steel	3	$545
GT572-MTD	Polished Nickel	3	$545
GT572-MTB	Matte Black	3	$580
GT572-MTBG	Brushed Gold	3	$620

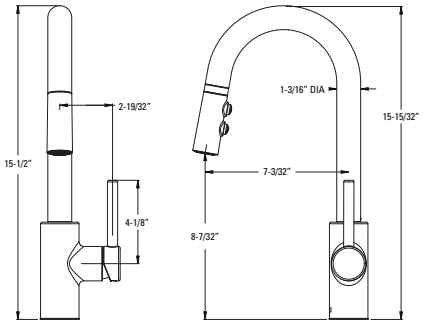

Technical Info

Holes: · 1 or 3-Hole 8" Installation

Features:
- AccuDock™ Sprayhead
- Ceramic Disc Valve
- High Arc Pull-Down Swivel Spout
- Metal Lever Handle
- Three-Function Sprayhead: Stream, Spray, and Pause
- Forward Only Handle Operation
- Single Post Mounting Ring and 3-Hole Deckplate Included
- 1.8 gpm @ 60 psi

Port Haven™
1-Handle Pull-Down Bar/Prep Kitchen Faucet

Model	Finish	Case Qty	List Price
GT572-TDC	Polished Chrome	3	$508
GT572-TDS	Stainless Steel	3	$579
GT572-TDD	Polished Nickel	3	$659
GT572-TDBG	Matte Black	3	$659
GT572-TDY	Tuscan Bronze	3	$659

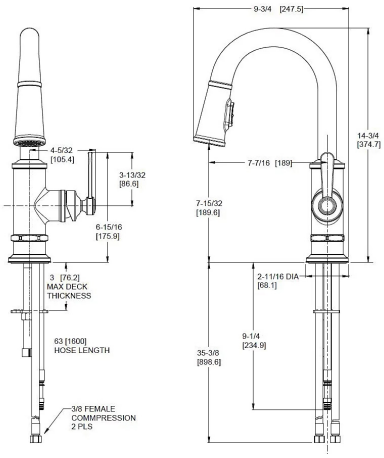

Technical Info

Holes: · 1-Hole 8" Installation

Features:
- MagnePfit™ Sprayhead Docking
- AutoAlign™ Sprayhead Docking
- Low Arc Pull-Down Swivel Spout
- Metal Lever Handle
- Two-Function Sprayhead: Stream and Spray
- 360˚ Rotating Spout
- Forward Only Handle Operation
- Pfast Connect™
- TiteSeal™ Technology
- Pforever Seal™ Ceramic Disc Valve
- 1.8 gpm @ 60 psi

Core Offering · CEC Compliant · Cal Green Compliant · NSF Lead-Free Certified · ADA Compliant · Accudock™

Stellen™
1-Handle Bar
Kitchen Faucet

	Model	Finish	Case Qty	List Price
★	LG572-SAC	Polished Chrome	3	$323
★	LG572-SAS	Stainless Steel	3	$380
★	LG572-SAB	Matte Black	3	$495

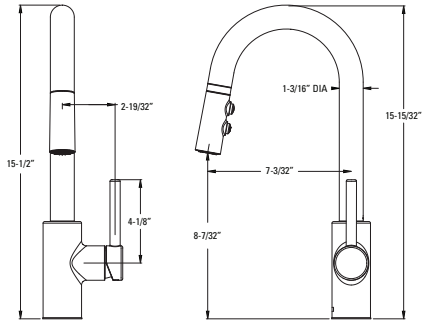

Technical Info

Holes: · 1 or 3-Hole 8" Installation

Features:
- AccuDock™ Sprayhead
- Ceramic Disc Valve
- High Arc Pull-Down Swivel Spout
- Metal Lever Handle
- Three-Function Sprayhead: Stream, Spray, and Pause
- Forward Only Handle Operation
- Single Post Mounting Ring and 3-Hole Deckplate Included
- 1.8 gpm @ 60 psi

★ Core Offering | CEC Compliant | Cal Green Compliant | NSF Lead-Free Certified | ADA Compliant | Accudock™

Pot Filler

Lita™
Wall Mount Pot Filler

Model	Finish	Case Qty	List Price
GT533-PFC	Polished Chrome	3	$789
GT533-PFS	Stainless Steel	3	$799
GT533-PFD	Polished Nickel	3	$842
GT533-PFY	Tuscan Bronze	3	$896
GT533-PFB	Matte Black	3	$896
GT533-PFBG	Brushed Gold	3	$940

Technical Info

Holes: · 1-Hole Installation

Features:
- Ceramic Disc Valves
- Metal Lever Handles
- Dual Handle Shut Off
- 3.0 gpm @ 60 psi

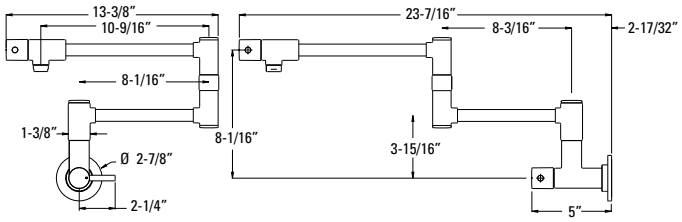

Port Haven™
Wall Mount Pot Filler

GT533-TDC	Polished Chrome	3	$723
GT533-TDS	Stainless Steel	3	$869
GT533-TDD	Polished Nickel	3	$903
GT533-TDY	Tuscan Bronze	3	$932
GT533-TDBG	Brushed Gold	3	$950

Holes: · 1-Hole Installation

Features:
- Ceramic Disc Valves
- Metal Lever Handles
- Dual Handle Shut Off
- 3.0 gpm @ 60 psi

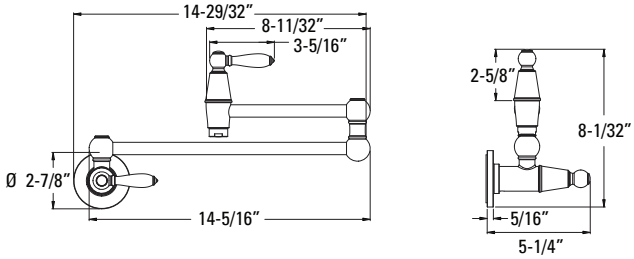

Core Offering · CEC Compliant · Cal Green Compliant · NSF Lead-Free Certified · ADA Compliant · Accudock™

Soap Dispensers

Modern
Soap Dispenser Kit

	Model	Finish	Case Qty	List Price
★	KSD-MDRC	Polished Chrome	6	$120
★	KSD-MDRS	Stainless Steel	6	$140
	KSD-MDRD	Polished Nickel	6	$140
★	KSD-MDRB	Matte Black	6	$145
	KSD-MDRBG	Brushed Gold	6	$150

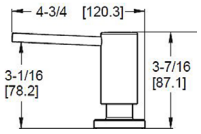

Technical Info

Holes: · 1-Hole

Features:
- Easy Above Counter Refill
- Anti-Residue Design Prevents Soap/Lotion Buildup
- Finishes Match Pfister Faucets
- All Metal Construction

Pfister
Soap Dispenser Kit

	Model	Finish	Case Qty	List Price
★	KSD-LCCC	Polished Chrome	6	$34
★	KSD-LCSS	Stainless Steel	6	$41

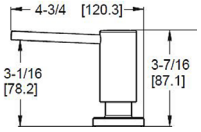

Holes: · 1-Hole

Features:
- Easy Above Counter Refill
- Anti-Residue Design Prevents Soap/Lotion Buildup
- Finishes Match Pfister Faucets
- All Metal Construction

Pfister
Soap Dispenser Kit

	Model	Finish	Case Qty	List Price
★	KSD-SRDCC	Polished Chrome	6	$58
★	KSD-SRDSS	Stainless Steel	6	$63
	KSD-SRDYY	Tuscan Bronze	6	$70
★	KSD-SRDBB	Matte Black	6	$70
	KSD-SRDBG	Brushed Gold	6	$75

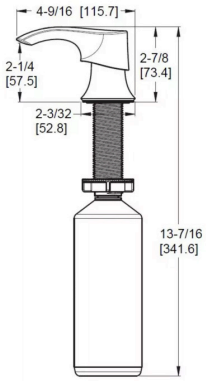

Holes: · 1-Hole

Features:
- Easy Above Counter Refill
- Anti-Residue Design Prevents Soap/Lotion Buildup
- Finishes Match Pfister Faucets
- All Metal Construction

★ Core Offering · CEC Compliant · Cal Green Compliant · NSF Lead-Free Certified · ADA Compliant · Accudock™

BATH

Single Control Lavatory Faucets B-3
Single Control Vessel Faucets B-5
4" Centerset Lavatory Faucets B-5
8" Wall Mount Lavatory Faucets B-5
8" Widespread Lavatory Faucets B-6
Pop-Up Assemblies B-7
Roman Tub Trims B-7
Deck Mount Tub Filler B-8
Handle Kits B-9
Free-Standing Tub Fillers B-10
Pressure Balance Shower Only Trim B-12
Pressure Balance Tub & Shower Trims . . B-13
Pressure Balance Valve Only Trim B-14
Stacked Valve/Diverter Trim B-15
Handshowers B-16
Slidebar Kits B-17
Diverter Trim Kits B-18
Electronic Touchless Faucet B-20

COLLECTIONS

Brislin™ B-23
Contempra® B-27
Deckard™ B-39
Kenzo™ B-51
Rhen™ B-61
Tenet™ B-71
Tisbury™ B-85
Weller™ B-95

TUB & SHOWER

Extension Kits B-101
Showerheads, Handhelds, & Components B-103

Bath Accessories A-1

Brislin™
Single Control Lavatory

	Model	Finish	Case Qty	List Price
★	LG42-BIØC	Polished Chrome	3	$381
	LG42-BIØK	Brushed Nickel	3	$490
★	LG42-BIØB	Matte Black	3	$532
Deckplates	961-188A	Polished Chrome	1	$15
	961-188J	Brushed Nickel	1	$24
	961-188B	Matte Black	1	$48

Contempra®
Single Control Lavatory

	Model	Finish	Case Qty	List Price
★	LG42-NCØØ	Polished Chrome	3	$230
	LG42-NKØØ	Brushed Nickel	3	$302
★	LG42-NBØØ	Matte Black	3	$420
	LG42-NBGØØ	Brushed Gold	3	$509
★ Deckplates	961-Ø95A	Polished Chrome	1	$22
	961-Ø95J	Brushed Nickel	1	$27
★	961-Ø95B	Matte Black	1	$47
	961-Ø95BG	Brushed Gold	1	$62

Deckard™
Single Control Lavatory

★	LG42-DAPC	Polished Chrome	3	$222
★	LG42-DAPK	Brushed Nickel	3	$267
★	LG42-DAPB	Matte Black	3	$311
★ Deckplates	961-23ØA	Polished Chrome	1	$11
★	961-23ØJ	Brushed Nickel	1	$15
★	961-23ØB	Matte Black	1	$20

Kenzo™
Single Control Lavatory

	LG42-DF1C	Polished Chrome	3	$341
	LG42-DF1K	Brushed Nickel	3	$431
	LG42-DF1B	Matte Black	3	$583
Deckplates	961-Ø6ØA	Polished Chrome	1	$24
	961-Ø6ØJ	Brushed Nickel	1	$26
	961-Ø6ØB	Matte Black	1	$30

Pfirst Modern™
Single Control Lavatory

★	LG142-Ø6ØØ	Polished Chrome	3	$172
★	LG142-Ø6ØK	Brushed Nickel	3	$229
★	LG142-Ø6ØB	Matte Black	3	$297
★ Deckplates	961-217A	Polished Chrome	1	$19
★	961-217J	Brushed Nickel	1	$26
★	961-217B	Matte Black	1	$46

Pfirst Series™
Single Control Lavatory

	LG142-5ØØØ	Polished Chrome	3	$73

Pfirst Series™
Single Control Lavatory

★	LG142-8ØØØ	Polished Chrome	3	$127
	LG142-8ØØK	Brushed Nickel	3	$160

Rhen™
Single Control Lavatory

	LG42-RH2C	Polished Chrome	3	$480
	LG42-RH2K	Brushed Nickel	3	$600
	LG42-RH2B	Polished Nickel	3	$640
	LG42-RH2BG	Brushed Gold	3	$685

★ Core Offering · CEC Compliant · Cal Green Compliant · Meets EPA WaterSenseSM Standards · NSF Lead-Free Certified · ADA Compliant · UltraSeal™ · SecurePfit™

Tenet™
Single Control Lavatory

Model	Finish	Case Qty	List Price
LG42-TNTC	Polished Chrome	3	$448
LG42-TNTK	Brushed Nickel	3	$632
LG42-TNTB	Matte Black	3	$645
LG42-TNTBG	Brushed Gold	3	$656

Tenet™
Single Control Lavatory

Model	Finish	Case Qty	List Price
LG42-TNT2C	Polished Chrome	3	$387
LG42-TNT2K	Brushed Nickel	3	$503
LG42-TNT2B	Matte Black	3	$464
LG42-TNT2BG	Brushed Gold	3	$484

Tisbury™
Single Control Lavatory

LG42-TBØC	Polished Chrome	3	$369
LG42-TBØK	Brushed Nickel	3	$499
LG42-TBØD	Polished Nickel	3	$499
LG42-TBØBG	Brushed Gold	3	$537

Weller™
Single Control Lavatory

★	LG42-WRØC	Polished Chrome	3	$196
	LG42-WRØK	Brushed Nickel	3	$230
	LG42-WRØY	Tuscan Bronze	3	$264
★	LG42-WRØB	Matte Black	3	$272

★ Deckplates	961-265A	Polished Chrome	1	$23
	961-265J	Brushed Nickel	1	$32
	961-265Y	Tuscan Bronze	1	$35
★	961-265B	Matte Black	1	$39

★ Core Offering · CEC Compliant · Cal Green Compliant · Meets EPA WaterSenseSM Standards · NSF Lead-Free Certified · ADA Compliant · UltraSeal™ · SecurePfit™

Single Control Vessel Faucets

Contempra®
Single Control
Vessel Lavatory

	Model	Finish	Case Qty	List Price
★	LG4Ø-NCØØ	Polished Chrome	3	$322
	LG4Ø-NKØØ	Brushed Nickel	3	$395
★	LG4Ø-NBØØ	Matte Black	3	$539
	LG4Ø-NBGØØ	Brushed Gold	3	$653

Bath Reference

4" Centerset Lavatory Faucets

Weller™
4" Centerset Lavatory

	Model	Finish	Case Qty	List Price
★	LG48-WRPC	Polished Chrome	3	$185
	LG48-WRPK	Brushed Nickel	3	$215
	LG48-WRPY	Tuscan Bronze	3	$259
★	LG48-WRPB	Matte Black	3	$250

8" Wall Mount Lavatory Faucets

Kenzo™
Wall Mounted
Widespread

Model	Finish	Case Qty	List Price
LG49-DF3C	Polished Chrome	3	$413
LG49-DF3K	Brushed Nickel	3	$543
LG49-DF3B	Matte Black	3	$673

Rhen™
2-Handle Wall Mount
Bathroom Faucet

Model	Finish	Case Qty	List Price
LG49-RH4C	Polished Chrome	3	$410
LG49-RH4K	Brushed Nickel	3	$512
LG49-RH4B	Matte Black	3	$547
LG49-RH4BG	Brushed Gold	3	$585

LØW8Ø1ØØ Rough In Valve is required and must be ordered separately

Tenet™
8" Wall Mount Lavatory

Model	Finish	Case Qty	List Price
LG49-TNT2C	Polished Chrome	3	$451
LG49-TNT2K	Brushed Nickel	3	$715
LG49-TNT2B	Matte Black	3	$722
LG49-TNT2BG	Brushed Gold	3	$736

LØW8Ø2ØØ is required and must be ordered separately

Core Offering · CEC Compliant · Cal Green Compliant · Meets EPA WaterSenseSM Standards · NSF Lead-Free Certified · ADA Compliant · UltraSeal™ · SecurePfit™

Contempra®
8" Widespread Lavatory

	Model	Finish	Case Qty	List Price
★	LG49-NCPC	Polished Chrome	3	$408
	LG49-NCPK	Brushed Nickel	3	$474
★	LG49-NCPB	Matte Black	3	$533
	LG49-NCPBG	Brushed Gold	3	$646

Deckard™
8" Widespread Lavatory

	Model	Finish	Case Qty	List Price
★	LG49-DAPC	Polished Chrome	3	$377
★	LG49-DAPK	Brushed Nickel	3	$422
★	LG49-DAPB	Matte Black	3	$467

Kenzo™
8" Widespread Lavatory

LG49-DF2C	Polished Chrome	3	$399
LG49-DF2K	Brushed Nickel	3	$564
LG49-DF2C	Matte Black	3	$776

Rhen™
8" Widespread Lavatory

LG49-RH3C	Polished Chrome	3	$603
LG49-RH3K	Brushed Nickel	3	$754
LG49-RH3B	Matte Black	3	$804
LG49-RH3BG	Brushed Gold	3	$862

Tenet™
8" Widespread Lavatory

LG49-TNT3C	Polished Chrome	3	$505
LG49-TNT3K	Brushed Nickel	3	$631
LG49-TNT3B	Matte Black	3	$673
LG49TNT3BG	Brushed Gold	3	$721

Tenet™
8" Widespread Lavatory

LG49-TNTC	Polished Chrome	3	$604
LG49-TNTK	Brushed Nickel	3	$860
LG49-TNTB	Matte Black	3	$866
LG49-TNTBG	Brushed Gold	3	$881

Tisbury™
8" Widespread Lavatory

LG49-TBØC	Polished Chrome	3	$508
LG49-TBØK	Brushed Nickel	3	$730
LG49-TBØD	Polished Nickel	3	$730
LG49-TBØBG	Brushed Gold	3	$762

Weller™
8" Widespread Lavatory

LG49-WRØC	Polished Chrome	3	$278
LG49-WRØK	Brushed Nickel	3	$334
LG49-WRØY	Tuscan Bronze	3	$369
LG49-WRØB	Matte Black	3	$376

★ Core Offering · CEC Compliant · Cal Green Compliant · Meets EPA WaterSenseSM Standards · NSF Lead-Free Certified · ADA Compliant · UltraSeal™ · SecurePfit™

Pop-Up Assemblies

	Model	Finish	Case Qty	List Price
Push & Seal™	972-Ø97A	Polished Chrome	1	$21
	972-Ø97J	Brushed Nickel	1	$22
	972-Ø97Y	Tuscan Bronze	1	$26
	972-Ø97B	Matte Black	1	$33
	972-Ø97BG	Brushed Gold	1	$38

1-Hole Roman Tub Trim

	Model	Finish	Case Qty	List Price
Deckard™ 1-Hole Roman Tub	RT6-1DAC	Polished Chrome	3	$356
	RT6-1DAK	Brushed Nickel	3	$400
	RT6-1DAB	Matte Black	3	$445

2-Hole Roman Tub Trim

	Model	Finish	Case Qty	List Price
Deckard™ 2-Hole Roman Tub	RT6-2DAC	Polished Chrome	3	$501
	RT6-2DAK	Brushed Nickel	3	$556
	RT6-2DAB	Matte Black	3	$612

Hand Shower 1.8 gpm @ 80 psi

Core Offering | CEC Compliant | Cal Green Compliant | Meets EPA WaterSenseSM Standards | NSF Lead-Free Certified | ADA Compliant | UltraSeal™ | SecurePfit™

3-Hole Roman Tub Trims

Contempra®
3-Hole Roman Tub

	Model	Finish	Case Qty	List Price
★	RT6-5NCC	Polished Chrome	3	$417
	RT6-5NCK	Brushed Nickel	3	$601
★	RT6-5NCB	Matte Black	3	$578
	RT6-5NCBG	Brushed Gold	3	$665

Deckard™
3-Hole Roman Tub

	Model	Finish	Case Qty	List Price
★	RT6-5DAC	Polished Chrome	3	$334
★	RT6-5DAK	Brushed Nickel	3	$378
★	RT6-5DAB	Matte Black	3	$422

Kenzo™
3-Hole Roman Tub

RT6-5D1C	Polished Chrome	3	$588
RT6-5D1K	Brushed Nickel	3	$705
RT6-5D1B	Matte Black	3	$887

Pfirst Series™
2-Hole Roman Tub

1T6-51ØØ	Polished Chrome	3	$136
1T6-51ØK	Brushed Nickel	3	$205

Weller™
3-Hole Roman Tub

★	RT6-5WRC	Polished Chrome	3	$271
	RT6-5WRK	Brushed Nickel	3	$328
★	RT6-5WRB	Matte Black	3	$367

Note: ØX615ØR or ØX6Ø5ØR Rough In Valve must be ordered separately for all 3-Hole Roman Tub Trims

4-Hole Roman Tub Trims

Kenzo™
4-Hole Roman Tub
with Hand Shower

Model	Finish	Case Qty	List Price
LG6-4D1B	Matte Black	3	$1,115

Hand Shower 1.8 gpm @ 80 psi

Deck Mount Tub Filler

Tisbury™
Deck Mount Tub Filler
with Hand Shower

Model	Finish	Case Qty	List Price
LG6-2TBC	Polished Chrome	1	$1,156
LG6-2TBK	Brushed Nickel	1	$1,431
LG6-2TBD	Polished Nickel	1	$1,431
LG6-2TBBG	Brushed Gold	1	$1,484

★ Core Offering · CEC Compliant · Cal Green Compliant · Meets EPA WaterSenseSM Standards · NSF Lead-Free Certified · ADA Compliant · UltraSeal™ · SecurePfit™

Tenet™
Diverter Trim
Cross Handle - Slide Bar/Hand Shower Kit

Model	Finish	Case Qty	List Price
HHL-Ø16TNTC	Polished Chrome	16	$35
HHL-Ø16TNTK	Brushed Nickel	16	$49
HHL-Ø16TNTB	Matte Black	16	$49
HHL-Ø16TNTBG	Brushed Gold	16	$56

Tenet™
Pressure Balance
Optional Cross Handle - Tub & Shower

Model	Finish	Case Qty	List Price
HHL-Ø89TNTC	Polished Chrome	12	$35
HHL-Ø89TNTK	Brushed Nickel	12	$49
HHL-Ø89TNTB	Matte Black	12	$49
HHL-Ø89TNTBG	Brushed Gold	12	$56

Tisbury™
Single Diverter Trim Handle

HHL-Ø16TBC	Polished Chrome	16	$29
HHL-Ø16TBK	Brushed Nickel	16	$42
HHL-Ø16TBD	Polished Nickel	16	$42
HHL-Ø16TBBG	Brushed Gold	16	$49

Tisbury™
2-Handle Cross Handle Kit

HHL-Ø49TBC	Polished Chrome	16	$45
HHL-Ø49TBK	Brushed Nickel	16	$60
HHL-Ø49TBD	Polished Nickel	16	$60
HHL-Ø49TBBG	Brushed Gold	16	$66

Tisbury™
Single Shower Handle

HHL-Ø89TBC	Polished Chrome	16	$29
HHL-Ø89TBK	Brushed Nickel	16	$41
HHL-Ø89TBD	Polished Nickel	16	$42
HHL-Ø89TBBG	Brushed Gold	16	$49

Tisbury™
Single Cross Handle for Slide Bar Kit

HHL-G16TBC	Polished Chrome	16	$29
HHL-G16TBK	Brushed Nickel	16	$41
HHL-G16TBD	Polished Nickel	16	$42
HHL-G16TBBG	Brushed Gold	16	$49

How to Order a Cross Handle Tub Filler

Cross Handle

+

Tub Filler

=

Complete Tub Filler

Core Offering | CEC Compliant | Cal Green Compliant | Meets EPA WaterSenseSM Standards | NSF Lead-Free Certified | ADA Compliant | UltraSeal™ | SecurePfit™

Hillstone™
Single Hole
Free-Standing Tub Filler
with Hand Shower

Model	Finish	Case Qty	List Price
LG6-1HLSC	Polished Chrome	1	$1,869
LG6-1HLSD	Polished Nickel	1	$2,243
LG6-1HLSB	Matte Black	1	$2,336
LG6-1HLSBG	Brushed Gold	1	$2,430

Hand Shower 1.8 gpm @ 80 psi

Rhen™
Single Hole
Free-Standing Tub Filler
with Hand Shower

Model	Finish	Case Qty	List Price
LG6-1RH1C	Polished Chrome	1	$1,880
LG6-1RH1K	Brushed Nickel	1	$2,430
LG6-1RH1B	Matte Black	1	$2,510
LG6-1RH1BG	Brushed Gold	1	$2,700

Tenet™
Single Hole
Free-Standing Tub Filler
with Hand Shower

LG6-1TNTC	Polished Chrome	1	$2,403
LG6-1TNTK	Brushed Nickel	1	$2,653
LG6-1TNTB	Matte Black	1	$2,836
LG6-1TNTBG	Brushed Gold	1	$3,052

Tisbury™
Traditional Double Riser
Free-Standing Tub Filler
with Hand Shower

LG6-1TBC	Polished Chrome	1	$1,612
LG6-1TBK	Brushed Nickel	1	$1,881
LG6-1TBD	Polished Nickel	1	$1,881
LG6-1TBBG	Brushed Gold	1	$2,176

Note: ØX627ØR Rough-In Valve must be ordered separately for all Free-Standing Tub Fillers

Core Offering · CEC Compliant · Cal Green Compliant · Meets EPA WaterSenseSM Standards · NSF Lead-Free Certified · ADA Compliant · UltraSeal™ · SecurePfit™

Verve
Free-Standing Tub Filler without Handles

Model	Finish	Case Qty	List Price
LG6-1VRVC	Polished Chrome	1	$2,665
LG6-1VRVB	Matte Black	1	$2,855
LG6-1VRVBG	Brushed Gold	1	$2,855

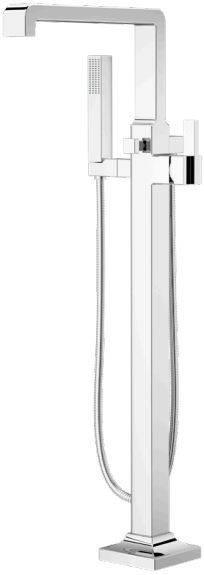

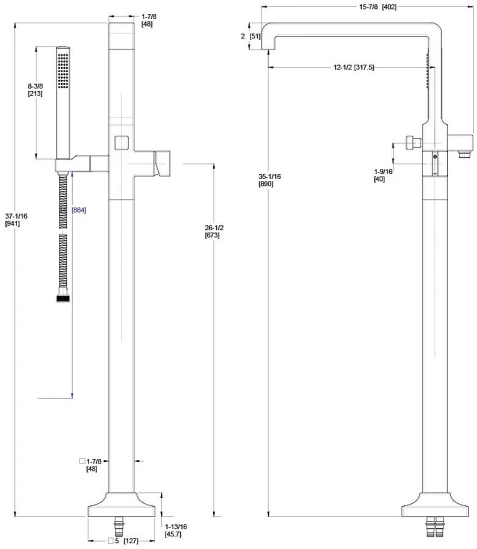

Technical Info

Holes: · 1-Hole Installation

Features:
· Sleek, Modern Design
· Ceramic Disc Valve
· Metal Lever Handle
· 8 gpm @ 60 psi
· Hand Shower 1.8 gpm @ 80 psi

Must Order Free-Standing Rough In Valve Separately.
See Valve Section.

Bath Reference

Lever Handle Kit

Model	Finish	Case Qty	List Price
HHL-LG6-1VRVLC	Polished Chrome	1	$90
HHL-LG6-1VRVLB	Matte Black	1	$120
HHL-LG6-1VRVLBG	Brushed Gold	1	$128

Brislin™ Pressure Balance Shower Trim

	Model	Finish	Case Qty	List Price
★	R89-7BIC	Polished Chrome	3	$150
	R89-7BIK	Brushed Nickel	3	$194
★	R89-7BIB	Matte Black	3	$255

Showerhead 1.8 gpm @ 80 psi

Contempra® Pressure Balance Shower Trim

	Model	Finish	Case Qty	List Price
★	LG89-7NCC	Polished Chrome	3	$211
	LG89-7NCK	Brushed Nickel	3	$317
★	LG89-7NCB	Matte Black	3	$304
	LG89-7NCBG	Brushed Gold	3	$354

Showerhead 1.8 gpm @ 80 psi

Deckard™ Pressure Balance Shower Trim

★	LG89-7DAC	Polished Chrome	3	$178
★	LG89-7DAK	Brushed Nickel	3	$222
★	LG89-7DAB	Matte Black	3	$267

Showerhead 1.8 gpm @ 80 psi

Kenzo™ Pressure Balance Shower Trim

LG89-7DFC	Polished Chrome	3	$263
LG89-7DFK	Brushed Nickel	3	$414
LG89-7DFB	Matte Black	3	$505

Pfirst Modern™ 1-Handle Shower Only Trim

★	R89-Ø6ØØ	Polished Chrome	3	$69
★	R89-Ø6ØK	Brushed Nickel	3	$97
★	R89-Ø6ØB	Matte Black	3	$161

Showerhead 1.8 gpm @ 80 psi

Pfirst Series™ Pressure Balance Shower Trim

★	LG89-Ø2ØØ	Polished Chrome	3	$49
	LG89-Ø2ØK	Brushed Nickel	3	$98

Showerhead 1.8 gpm @ 80 psi

Rhen™ Pressure Balance Shower Trim

LG89-7RHC	Polished Chrome	3	$414
LG89-7RHK	Brushed Nickel	3	$515
LG89-7RHB	Matte Black	3	$580
LG89-7RHBG	Brushed Gold	3	$604

Showerhead 1.8 gpm @ 80 psi

Tenet™ Pressure Balance Tub & Shower Trim

LG89-8TNTC	Polished Chrome	3	$590
LG89-8TNTK	Brushed Nickel	3	$660
LG89-8TNTB	Matte Black	3	$799
LG89-8TNTBG	Brushed Gold	3	$833

Tisbury™ Pressure Balance Shower Trim

LG89-7TBC	Polished Chrome	3	$412
LG89-7TBK	Brushed Nickel	3	$512
LG89-7TBD	Polished Nickel	3	$512
LG89-7TBBG	Brushed Gold	3	$604

Showerhead 1.8 gpm @ 80 psi

Weller™ Pressure Balance Shower Trim

★	LG89-7WRC	Polished Chrome	3	$104
	LG89-7WRK	Brushed Nickel	3	$161
	LG89-7WRY	Tuscan Bronze	3	$219
★	LG89-7WRB	Matte Black	3	$223

Showerhead 1.8 gpm @ 80 psi

★ Core Offering · CEC Compliant · Cal Green Compliant · Meets EPA WaterSenseSM Standards · NSF Lead-Free Certified · ADA Compliant · UltraSeal™ · SecurePfit™

Contempra®
Pressure Balance Tub & Shower Trim

Model	Finish	Case Qty	List Price
LG89-8NCC	Polished Chrome	3	$299
LG89-8NCK	Brushed Nickel	3	$440
LG89-8NCB	Matte Black	3	$423
LG89-8NCBG	Brushed Gold	3	$494

Showerhead 1.8 gpm @ 80 psi

Deckard™
Pressure Balance Tub & Shower Trim

Model	Finish	Case Qty	List Price
LG89-8DAC	Polished Chrome	3	$267
LG89-8DAK	Brushed Nickel	3	$333
LG89-8DAB	Matte Black	3	$400

Showerhead 1.8 gpm @ 80 psi

Kenzo™
Pressure Balance Tub & Shower Trim

Model	Finish	Case Qty	List Price
LG89-8DFC	Polished Chrome	3	$309
LG89-8DFB	Matte Black	3	$641

Showerhead 1.8 gpm @ 80 psi

Pfirst Modern™
Pressure Balance Tub & Shower Trim

Model	Finish	Case Qty	List Price
R89-Ø7ØØ	Polished Chrome	3	$102
R89-Ø7ØK	Brushed Nickel	3	$138
R89-Ø7ØB	Matte Black	3	$187

Showerhead 1.8 gpm @ 80 psi

Pfirst Series™
Pressure Balance Tub & Shower Trim

Model	Finish	Case Qty	List Price
LG89-Ø3ØØ	Polished Chrome	3	$54
LG89-Ø3ØK	Brushed Nickel	3	$109

Showerhead 1.8 gpm @ 80 psi

Rhen™
Pressure Balance Tub & Shower Trim

Model	Finish	Case Qty	List Price
LG89-8RHC	Polished Chrome	3	$500
LG89-8RHK	Brushed Nickel	3	$631
LG89-8RHB	Matte Black	3	$699
LG89-8RHBG	Brushed Gold	3	$726

Showerhead 1.8 gpm @ 80 psi

Tenet™
Pressure Balance Tub & Shower Trim

Model	Finish	Case Qty	List Price
LG89-8TNTC	Polished Chrome	3	$590
LG89-8TNTK	Brushed Nickel	3	$660
LG89-8TNTB	Matte Black	3	$799
LG89-8TNTBG	Brushed Gold	3	$833

Tisbury™
Pressure Balance Tub & Shower Trim

Model	Finish	Case Qty	List Price
LG89-8TBC	Polished Chrome	3	$453
LG89-8TBK	Brushed Nickel	3	$589
LG89-8TBD	Polished Nickel	3	$589
LG89-8TBBG	Brushed Gold	3	$674

Showerhead 1.8 gpm @ 80 psi

Weller™
Pressure Balance Tub & Shower Trim

Model	Finish	Case Qty	List Price
LG89-8WRC	Polished Chrome	3	$139
LG89-8WRK	Brushed Nickel	3	$207
LG89-8WRY	Tuscan Bronze	3	$264
LG89-8WRB	Matte Black	3	$270

Showerhead 1.8 gpm @ 80 psi

Core Offering · CEC Compliant · Cal Green Compliant · Meets EPA WaterSenseSM Standards · NSF Lead-Free Certified · ADA Compliant · UltraSeal™ · SecurePfit™

Contempra® Pressure Balance Valve Only Trim

	Model	Finish	Case Qty	List Price
★	R89-1NCC	Polished Chrome	3	$113
	R89-1NCK	Brushed Nickel	3	$176
★	R89-1NCB	Matte Black	3	$169
	R89-1NCBG	Brushed Gold	3	$182

Deckard™ Pressure Balance Valve Only Trim

Model	Finish	Case Qty	List Price
R89-1DAC	Polished Chrome	3	$111
R89-1DAK	Brushed Nickel	3	$139
R89-1DAB	Matte Black	3	$155

Kenzo™ Pressure Balance Valve Only Trim

R89-1DFC	Polished Chrome	3	$183
R89-1DFK	Brushed Nickel	3	$288
R89-1DFB	Matte Black	3	$296

Pfirst Modern™ Pressure Balance Valve Only Trim

R89-Ø4ØØ	Polished Chrome	3	$57
R89-Ø4ØK	Brushed Nickel	3	$64
R89-Ø4ØB	Matte Black	3	$109

Rhen™ Pressure Balance Valve Only Trim

R89-1RHC	Polished Chrome	3	$233
R89-1RHBG	Brushed Gold	3	$336

Tenet™ Pressure Balance Valve Only Trim

R89-1TNTC	Polished Chrome	3	$244
R89-1TNTB	Matte Black	3	$333
R89-1TNTBG	Brushed Gold	3	$347

Tisbury® Pressure Balance Valve Only Trim

R89-1TBC	Polished Chrome	3	$211
R89-1TBK	Brushed Nickel	3	$286
R89-1TBD	Polished Nickel	3	$289
R89-1TBBG	Brushed Gold	3	$346

Weller™ Pressure Balance Valve Only Trim

★	R89-1WRC	Polished Chrome	3	$69
	R89-1WRK	Brushed Nickel	3	$103
	R89-1WRY	Tuscan Bronze	3	$138
★	R89-1WRB	Matte Black	3	$144

★ Core Offering · CEC Compliant · Cal Green Compliant · Meets EPA WaterSenseSM Standards · NSF Lead-Free Certified · ADA Compliant · UltraSeal™ · SecurePfit™

Contempra
Pressure Balance
Valve Only Trim

	Model	Finish	Case Qty	List Price
★	R89-SNCC	Polished Chrome	6	$222
	R89-SNCK	Brushed Nickel	6	$249
★	R89-SNCB	Matte Black	6	$274
	R89-SNCBG	Brushed Gold	6	$284

Deckard
Pressure Balance
Valve Only Trim

	Model	Finish	Case Qty	List Price
★	R89-SDAC	Polished Chrome	6	$296
★	R89-SDAK	Brushed Nickel	6	$332
★	R89-SDAB	Matte Black	6	$363

	Model	Finish	Case Qty	List Price
Contempra™ 3 Piece Hand Held Shower Kit	LG16-2NCC	Polished Chrome	3	$330
	LG16-2NCB	Matte Black	3	$535

	Model	Finish	Case Qty	List Price
Kenzo™ 3 Piece Hand Held Shower Kit	LG16-2DFC	Polished Chrome	3	$244
	LG16-2DFK	Brushed Nickel	3	$379
	LG16-2DFB	Matte Black	3	$389

Core Offering · CEC Compliant · Cal Green Compliant · Meets EPA WaterSenseSM Standards · NSF Lead-Free Certified · ADA Compliant · UltraSeal™ · SecurePfit™

Kenzo™
Slide Bar/
Hand Shower Kit

	Model	Finish	Case Qty	List Price
★	LG16-3DFC	Polished Chrome	3	$457
★	LG16-3DFK	Brushed Nickel	3	$608
★	LG16-3DFB	Matte Black	3	$709

Hand Shower 1.8 gpm @ 80 psi

Rhen™
Slide Bar/
Hand Shower Kit

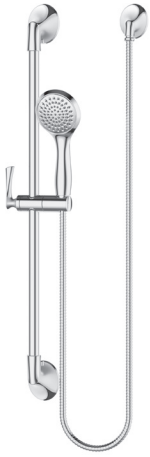

Model	Finish	Case Qty	List Price
LG16-3RHC	Polished Chrome	3	$433
LG16-3RHK	Brushed Nickel	3	$572
LG16-3RHB	Matte Black	3	$668
LG16-3RHBG	Brushed Gold	3	$698

Hand Shower 1.8 gpm @ 80 psi

Pfister
ADA Hand Held
Shower with Slide Bar

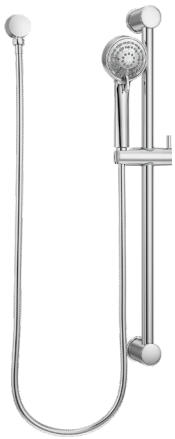

★	LG16-5ØØC	Polished Chrome	6	$295
★	LG16-5ØØK	Brushed Nickel	6	$440
	LG16-5ØØD	Polished Nickel	6	$495
	LG16-5ØØY	Tuscan Bronze	6	$550
★	LG16-5ØØB	Matte Black	6	$525
	LG16-5ØØBG	Brushed Gold	6	$660

Hand Shower 1.8 gpm @ 80 psi

Tisbury™
Slide Bar/
Hand Shower Kit

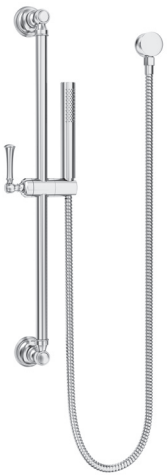

LG16-3TBC	Polished Chrome	3	$384
LG16-3TBK	Brushed Nickel	3	$548
LG16-3TBD	Polished Nickel	3	$548
LG16-3TBBG	Brushed Gold	3	$643

Hand Shower 1.8 gpm @ 80 psi

Contempra®

Model	Finish	Case Qty	List Price
Ø16-NC1C	Polished Chrome	3	$99
Ø16-NC1K	Brushed Nickel	3	$131
Ø16-NC1B	Matte Black	3	$130
Ø16-NC1BG	Brushed Gold	3	$157

Deckard™

Model	Finish	Case Qty	List Price
Ø16-DAØC	Polished Chrome	3	$67
Ø16-DAØK	Brushed Nickel	3	$83
Ø16-DAØB	Matte Black	3	$100

Kenzo™

Ø16-DFØC	Polished Chrome	3	$124
Ø16-DFØK	Brushed Nickel	3	$165
Ø16-DFØB	Matte Black	3	$181

Rhen™

Ø16-RH1C	Polished Chrome	3	$140
Ø16-RH1K	Brushed Nickel	3	$193
Ø16-RH1B	Matte Black	3	$215
Ø16-RH1BG	Brushed Gold	3	$232

Tenet™

Ø16-TNT1C	Polished Chrome	3	$146
Ø16-TNT1K	Brushed Nickel	3	$202
Ø16-TNT1B	Matte Black	3	$224
Ø16-TNT1BG	Brushed Gold	3	$244

Tisbury™

Ø16-TB1C	Polished Chrome	3	$139
Ø16-TB1K	Brushed Nickel	3	$185
Ø16-TB1D	Polished Nickel	3	$185
Ø16-TB1BG	Brushed Gold	3	$242

Core Offering · CEC Compliant · Cal Green Compliant · Meets EPA WaterSenseSM Standards · NSF Lead-Free Certified · ADA Compliant · UltraSeal™ · SecurePfit™

Touchless Commercial
Lavatory Faucet

A touchless design for clean, effortless use in commercial applications! Simply turn the water on by placing your hands under the faucet. Enjoy the sleek style which fits a variety of public spaces. This faucet provides dependable performance, and an eco-conscious design that has a 0.5 gallon per minute flow rate for maximum efficiency which is compliant to most regulations. Keep germs at bay with React™ Touch-Free Technology and enjoy a tidier sink with this easy-to-use faucet.

LF042EINC

LF042EINC
Shown with Optional
4" Deckplate

Certifications:

- NSF Lead-Free Certified
- Cal Green Certified
- CEC Compliant

	Model	Finish	Case Qty	List Price
Inertia Touchless Faucet ★	LF-Ø42-EINC	Touchless Commercial Bath Faucet (Chrome)	3	$324

Technical Info

Holes: · 1-Hole Installation

Features:
- React™ Touch-Free Technology
- Single Hole Applications
- 0.5 GPM Flow Rate
- Vandal Resistant Aerator
- Fail-Safe Feature (turn off when no power)
- Includes 4 x AA Batteries
- Battery Powered 2yr+ with 150 uses per day
- Mounting Hardware Included
- Easy to assemble
- All Metal Construction
- Lead Free Brass
- CUPc, IAPMO, ASME, NSF certified
- Limited 3 Year Commercial Warranty

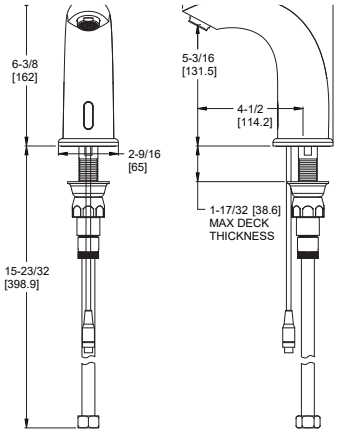

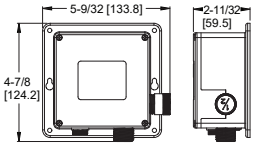

Control Box

	95ø-4229	AC Adapter	1	$50
	961-266	Deckplate	1	$25

Optional:
- For 3-hole applications
- 6V AC Adapter
- Mixing Valve
- 0.35, 1.0, 1.5 GPM Aerators
- 0.5 GPM Vandal Proof Aerator

4" Deckplate

Optional Deckplate

AC Adapter

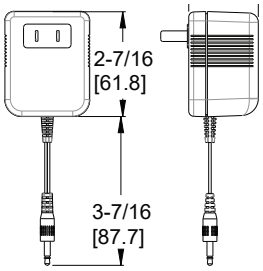

Mixing Valve

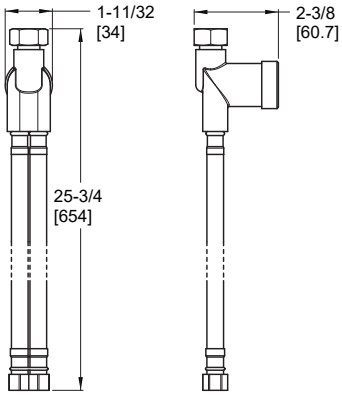

★ Core Offering · CEC Compliant · Cal Green Compliant · Meets EPA WaterSenseSM Standards · NSF Lead-Free Certified · ADA Compliant · UltraSeal™ · SecurePfit™

Bath Collections

Rhen PAGE: B-61

Pfirst Modern PAGE: P-3

Pfirst Series PAGE: P-3

Tisbury PAGE: B-85

Brislin
PAGE: B-23

Tenet
PAGE: B-71

Deckard
PAGE: B-39

Contempra
PAGE: B-27

Kenzo
PAGE: B-51

Weller
PAGE: B-95

Brislin

This is mod that makes your interior design sing. Right angles and soft circles immediately bring to mind the fixtures of Bauhaus. With all the best aspects of function integrated into form, playful sophistication comes together in unified simplicity. For stark purists, it's your perfect centerpiece. For the avant garde or adventurous, Brislin is your building block for clean, layered looks.

Single Control Lavatory

	Model	Finish	Case Qty	List Price
★	LG42-BIØC	Polished Chrome	3	$381
	LG42-BIØK	Brushed Nickel	3	$490
★	LG42-BIØB	Matte Black	3	$532
	961-188A	Polished Chrome	1	$15
	961-188J	Brushed Nickel	1	$24
	961-188B	Matte Black	1	$48

Deckplates

Technical Info

Holes: · 1-Hole installation

Features:
- Ceramic Disc Valve
- Metal Lever Handle
- Single Post Mounting Ring
- Grid Strainer Sold Separately
- Hot/Cold Indicator
- 1.2 gpm @ 60 psi

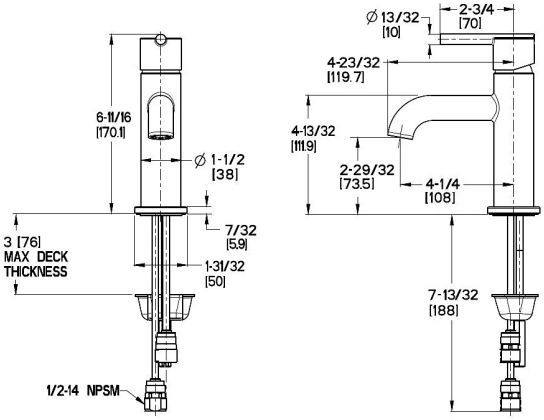

Pressure Balance Shower Trim

	Model	Finish	Case Qty	List Price
★	R89-7BIC	Polished Chrome	3	$150
	R89-7BIK	Brushed Nickel	3	$194
★	R89-7BIB	Matte Black	3	$255

Features:
- SecurePfit™
- Metal Lever Handle
- Hot/Cold Indicator
- Decorative Raincan Showerhead
- Easy To Clean Spray Nozzles
- Order 941-Ø55Ø for 1.5 gpm Showerhead Insert
- Showerhead 1.8 gpm @ 80 psi

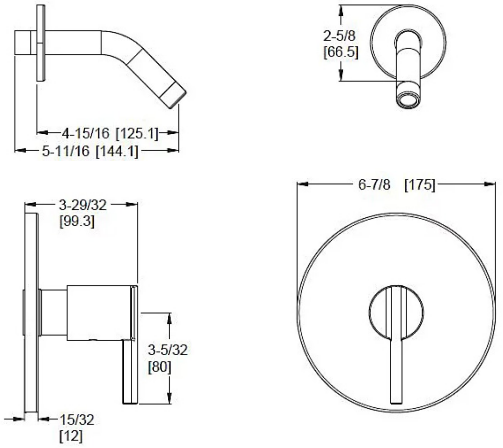

Core Offering · CEC Compliant · Cal Green Compliant · Meets EPA WaterSenseSM Standards · NSF Lead-Free Certified · ADA Compliant · UltraSeal™ · SecurePfit™

Raincan Showerhead

	Model	Finish	Case Qty	List Price
★	LJ15-BIØC	Polished Chrome	1	$38
	LJ15-BIØK	Brushed Nickel	1	$53
★	LJ15-BIØB	Matte Black	1	$73

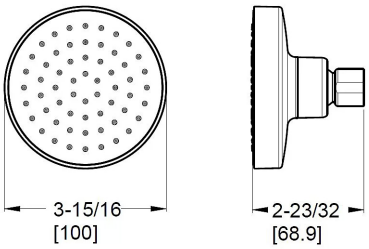

Technical Info

Features:
- Raincan Showerhead
- Easy To Clean Spray Nozzles
- Brass Ball Joint
- Shower Arm and Flange Sold Separately
- Order 941-Ø55Ø for 1.5 gpm Showerhead Insert

Quick Connect Tub Spout

920-216A	Polished Chrome	1	$39
920-216J	Brushed Nickel	1	$48
920-216B	Matte Black	1	$58

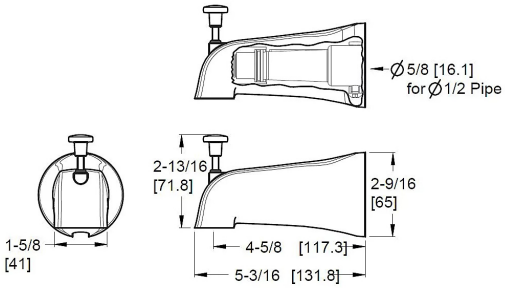

Features:
- QuickConnect Spout™
- Pairs with R897BI* Pressure Balance Shower Trim

Contempra

This is the faucet that collects compliments by the handful. Contempra looks oh-so-clean that it can go mod or retro, for those of you who like to mix and match. If you've got a Mid-Century heart and an eye for quality, this is your shiny new sweet spot.

Single Control Vessel Lavatory

	Model	Finish	Case Qty	List Price
★	LG4Ø-NCØØ	Polished Chrome	3	$322
	LG4Ø-NKØØ	Brushed Nickel	3	$395
★	LG4Ø-NBØØ	Matte Black	3	$539
	LG4Ø-NBGØØ	Brushed Gold	3	$653
★	961-Ø95A	Polished Chrome	1	$22
	961-Ø95J	Brushed Nickel	1	$27
★	961-Ø95B	Matte Black	1	$47
	961-Ø95BG	Brushed Gold	1	$62

Deckplates

Technical Info

Holes: · 1-Hole installation

Features:
- Ceramic Disc Valve
- Metal Lever Handle
- Single Post Mounting Ring
- Grid Strainer Sold Separately
- Hot/Cold Indicator
- 1.2 gpm @ 60 psi

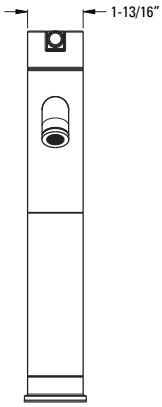

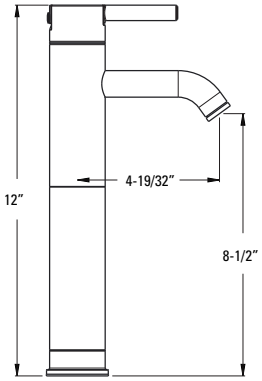

Single Control Lavatory

	Model	Finish	Case Qty	List Price
★	LG42-NCØØ	Polished Chrome	3	$230
	LG42-NKØØ	Brushed Nickel	3	$302
★	LG42-NBØØ	Matte Black	3	$420
	LG42-NBGØØ	Brushed Gold	3	$509
★	961-Ø95A	Polished Chrome	3	$22
	961-Ø95J	Brushed Nickel	3	$27
★	961-Ø95B	Matte Black	3	$47
	961-Ø95BG	Brushed Gold	3	$62

Deckplates

Holes: · 1-Hole Installation

Features:
- Ceramic Disc Valve
- Metal Lever Handle
- Single Post Mounting Ring
- Optional 3-Hole Installation Deck Plate Available, Order 961-Ø95* Separately
- All Metal Pop-Up
- Hot/Cold Indicator
- 1.2 gpm @ 60 psi

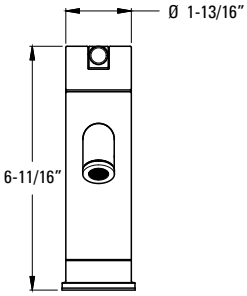

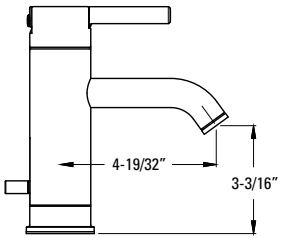

Brislin™

Core Offering · CEC Compliant · Cal Green Compliant · Meets EPA WaterSenseSM Standards · NSF Lead-Free Certified · ADA Compliant · UltraSeal™ · SecurePfit™

	Model	Finish	Case Qty	List Price
8" Widespread Lavatory ★	LG49-NCPC	Polished Chrome	3	$408
	LG49-NCPK	Brushed Nickel	3	$474
★	LG49-NCPB	Matte Black	3	$533
	LG49-NCPBG	Brushed Gold	3	$646

Technical Info

Holes: · 3-Hole 8-15" Installation

Features:
- Ceramic Disc Valves
- Metal Lever Handles
- High Arc Spout
- Quick Connect Hose Assembly
- All Metal Pop-Up
- Order 971-Ø86Ø to Increase Max. Install Depth to 3"
- 1.2 gpm @ 60 psi

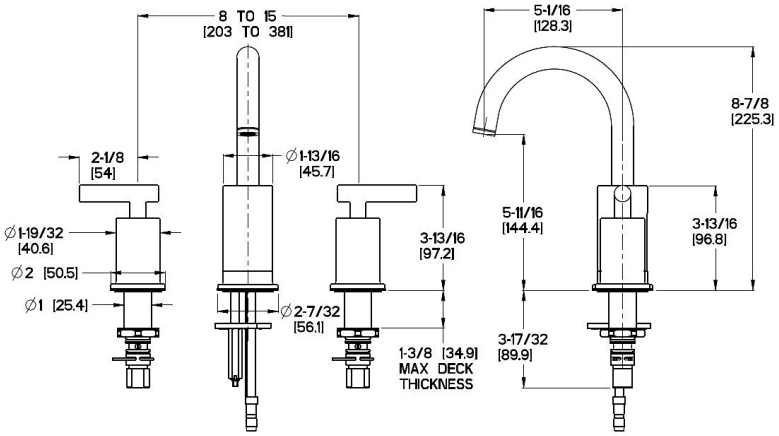

Brislin™

Core Offering · CEC Compliant · Cal Green Compliant · Meets EPA WaterSenseSM Standards · NSF Lead-Free Certified · ADA Compliant · UltraSeal™ · SecurePfit™

Roman Tub Trim

	Model	Finish	Case Qty	List Price
★	RT6-5NCC	Polished Chrome	3	$417
	RT6-5NCK	Brushed Nickel	3	$601
★	RT6-5NCB	Matte Black	3	$578
	RT6-5NCBG	Brushed Gold	3	$665

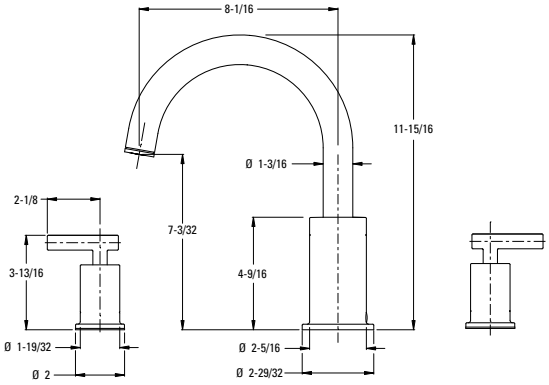

Technical Info

Holes: · 3-Hole

Features:
- Ceramic Disc Valves
- Fixed Spout
- Handles Included

Must Order ØX6-Ø5ØR or ØX6-15ØR Rough In Valve Separately. See Valve Section.

Single Hole Free-Standing Tub Filler with Hand Shower

LG6-1HLSC	Polished Chrome	1	$1,869
LG6-1HLSD	Polished Nickel	1	$2,243
LG6-1HLSB	Matte Black	1	$2,336
LG6-1HLSBG	Brushed Gold	1	$2,430

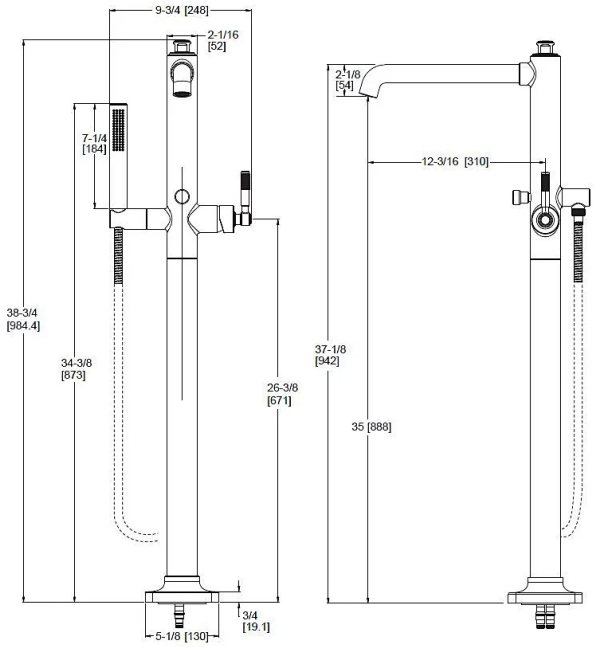

Holes: · 1-Hole Installation

Features:
- All Metal Construction
- Volume and Temperature Control
- Easy to Clean Nozzles
- Includes coordinating tub Hand Shower
- Spout and handles included
- 6.5 gpm @ 45 psi
- Hand Shower 1.8 gpm @ 80 psi

Must Order ØX6-27ØR Valve Separately. See Valve Section.

Brislin™

Core Offering · CEC Compliant · Cal Green Compliant · Meets EPA WaterSenseSM Standards · NSF Lead-Free Certified · ADA Compliant · UltraSeal™ · SecurePfit™

Pressure Balance Tub & Shower Trim

	Model	Finish	Case Qty	List Price
★	LG89-8NCC	Polished Chrome	3	$299
	LG89-8NCK	Brushed Nickel	3	$440
★	LG89-8NCB	Matte Black	3	$423
	LG89-8NCBG	Brushed Gold	3	$494

Technical Info

Features:
- SecurePfit™
- Metal Lever Handle
- Hot/Cold Indicator
- Decorative Raincan Showerhead
- Easy To Clean Spray Nozzles
- Quick Connect Metal Diverting Tub Spout
- Order 941-Ø55Ø for 1.5 gpm Showerhead Insert
- Showerhead 1.8 gpm @ 80 psi

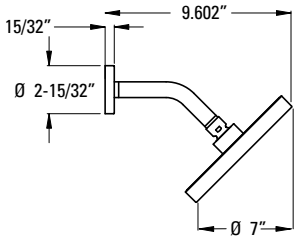

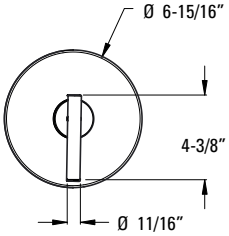

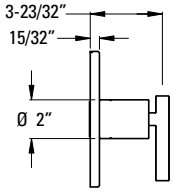

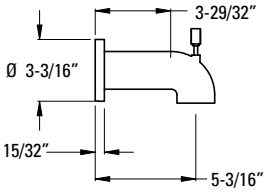

Pressure Balance Shower Trim

	Model	Finish	Case Qty	List Price
★	LG89-7NCC	Polished Chrome	3	$211
	LG89-7NCK	Brushed Nickel	3	$317
★	LG89-7NCB	Matte Black	3	$304
	LG89-7NCBG	Brushed Gold	3	$354

Features:
- SecurePfit™
- Metal Lever Handle
- Hot/Cold Indicator
- Decorative Raincan Showerhead
- Easy To Clean Spray Nozzles
- Order 941-Ø55Ø for 1.5 gpm Showerhead Insert
- Showerhead 1.8 gpm @ 80 psi

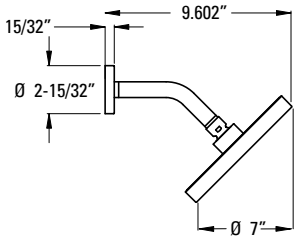

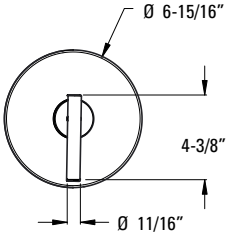

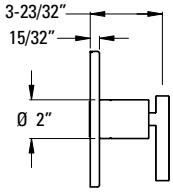

Brislin™

Core Offering | CEC Compliant | Cal Green Compliant | Meets EPA WaterSenseSM Standards | NSF Lead-Free Certified | ADA Compliant | UltraSeal™ | SecurePfit™

Pressure Balance Valve Only Trim

	Model	Finish	Case Qty	List Price
★	R89-1NCC	Polished Chrome	3	$113
	R89-1NCK	Brushed Nickel	3	$176
★	R89-1NCB	Matte Black	3	$169
	R89-1NCBG	Brushed Gold	3	$182

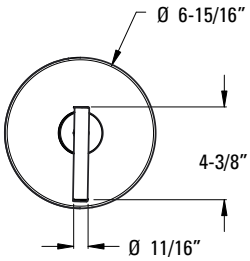

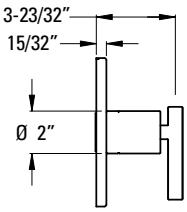

Technical Info

Features:
- SecurePfit™
- Metal Lever Handle
- Hot/Cold Indicator

Diverter Trim Only

Ø16-NC1C	Polished Chrome	3	$99
Ø16-NC1K	Brushed Nickel	3	$131
Ø16-NC1B	Matte Black	3	$130
Ø16-NC1BG	Brushed Gold	3	$157

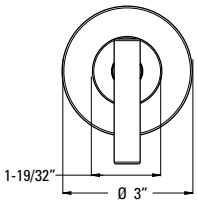

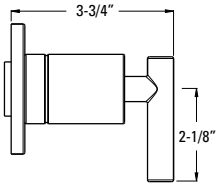

Features:
- SecurePfit™
- Metal Lever Handle and Matching Flange

Must order Ø15-3WDNS (Non-Shared, Cal Green Compliant) or Ø15-6WDS (Shared) Rough-In Valve Separately. See Valve Section.

Stacked Diverter Only Trim

★	R89-SNCC	Polished Chrome	6	$222
	R89-SNCK	Brushed Nickel	6	$249
★	R89-SNCB	Matte Black	6	$274
	R89-SNCBG	Brushed Gold	6	$284

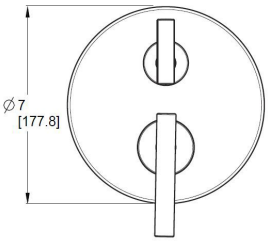

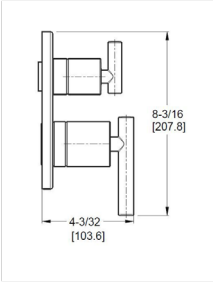

Features:
- SecurePfit™
- Metal Lever Handle
- Hot/Cold Indicator

Must order Ø15-3WDNSS (Non-Shared, Cal Green Compliant) or Ø15-6WDSS (Shared) Stacked Rough-In Valve Separately. See Valve Section.

Brislin™

Core Offering · CEC Compliant · Cal Green Compliant · Meets EPA WaterSenseSM Standards · NSF Lead-Free Certified · ADA Compliant · UltraSeal™ · SecurePfit™

ADA Handheld Shower with Slide Bar

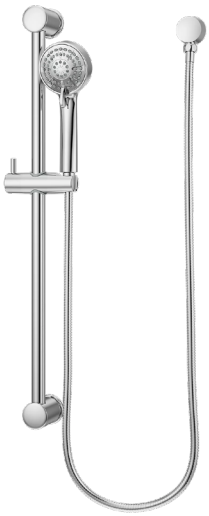

	Model	Finish	Case Qty	List Price
★	LG16-5ØØC	Polished Chrome	3	$295
★	LG16-5ØØK	Brushed Nickel	3	$440
	LG16-5ØØD	Polished Nickel	3	$495
★	LG16-5ØØB	Matte Black	3	$525
	LG16-5ØØY	Tuscan Bronze	3	$660
	LG16-5ØØBG	Brushed Gold	3	$550

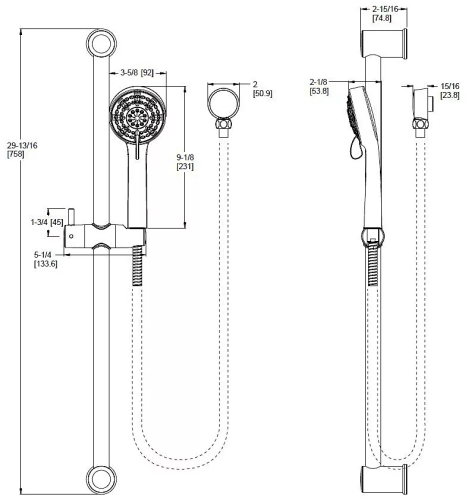

Technical Info

Features:
- 1.8 GPM Flow Rate
- 60" Metal Hose
- All Metal Construction
- Easy to Clean Nozzles
- Mounting Hardware Included
- Valve Not Included

3 Piece Handheld Shower Kit

★	LG16-2NCC	Polished Chrome	3	$330
	LG16-2NCK	Brushed Nickel	3	$495
★	LG16-2NCB	Matte Black	3	$535
	LG16-2NCBG	Brushed Gold	3	$556

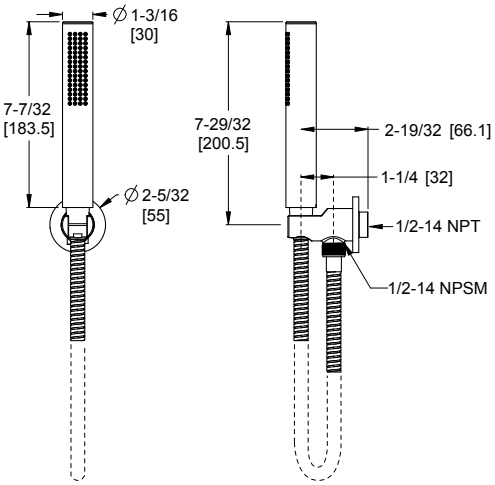

Features:
- 1.8 GPM Flow Rate
- 60" Metal Hose
- All Metal Construction
- Easy to Clean Nozzles
- Mounting Hardware Included
- Valve Not Included

Brislin™

Core Offering | CEC Compliant | Cal Green Compliant | Meets EPA WaterSenseSM Standards | NSF Lead-Free Certified | ADA Compliant | UltraSeal™ | SecurePfit™

Raincan Showerhead

	Model	Finish	Case Qty	List Price
★	973-312A	Polished Chrome	1	$95
	973-312J	Brushed Nickel	1	$100
★	973-312B	Matte Black	1	$109
	973-312BG	Brushed Gold	1	$176

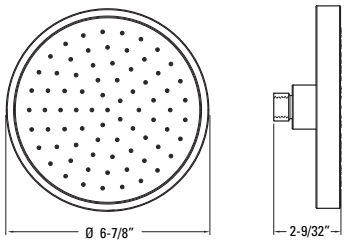

Technical Info

Features:
- Raincan Showerhead
- Easy To Clean Spray Nozzles
- Brass Ball Joint
- Shower Arm and Flange Sold Separately
- Order 941-Ø55Ø for 1.5 gpm Showerhead Insert

10" Raincan Showerhead

	Model	Finish	Case Qty	List Price
★	LG15-TNT1C	Polished Chrome	1	$250
	LG15-TNT1K	Brushed Nickel	1	$280
★	LG15-TNT1B	Matte Black	1	$310
	LG15-TNT1BG	Brushed Gold	1	$340

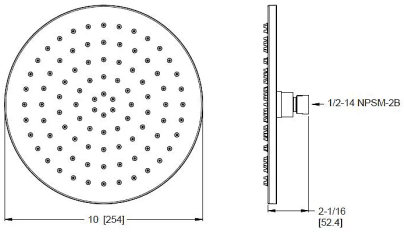

Features:
- Raincan Showerhead
- Easy To Clean Spray Nozzles
- Brass Ball Joint
- Shower Arm and Flange Sold Separately
- Order 941-Ø55Ø for 1.5 gpm Showerhead Insert

Shower Arm Flange

	Model	Finish	Case Qty	List Price
★	96Ø-258A	Polished Chrome	1	$18
	96Ø-258J	Brushed Nickel	1	$25
★	96Ø-258B	Matte Black	1	$19
	96Ø-258BG	Brushed Gold	1	$22

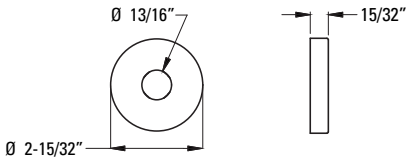

Features:
- All Metal
- Matches Contempra Style & Finishes

Brislin™

Core Offering | CEC Compliant | Cal Green Compliant | Meets EPA WaterSenseSM Standards | NSF Lead-Free Certified | ADA Compliant | UltraSeal™ | SecurePfit™

Straight Shower Arm

	Model	Finish	Case Qty	List Price
★	973-1Ø3A	Polished Chrome	1	$59
★	973-1Ø3J	Brushed Nickel	1	$71
★	973-1Ø3Y	Tuscan Bronze	1	$87
	973-1Ø3D	Polished Nickel	1	$121
★	973-1Ø3B	Matte Black	1	$130
	973-1Ø3BG	Brushed Gold	1	$159

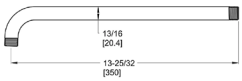

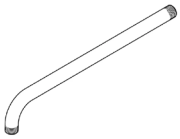

Technical Info

Features:
- All Metal
- Matches Contempra Style & Finishes

Curved Shower Arm

	Model	Finish	Case Qty	List Price
★	973-Ø3ØA	Polished Chrome	1	$17
★	973-Ø3ØJ	Brushed Nickel	1	$40
	973-Ø3ØY	Tuscan Bronze	1	$27
	973-Ø3ØD	Polished Nickel	1	$25
★	973-Ø3ØB	Matte Black	1	$23
	973-Ø3ØBG	Brushed Gold	1	$34

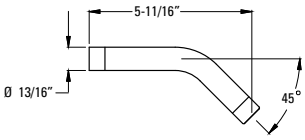

Features:
- Brass Shower Arm
- 1/2" NPT Male Connections

Contempra® Tub Spout

	Model	Finish	Case Qty	List Price
★	92Ø-227A	Polished Chrome	1	$103
	92Ø-227J	Brushed Nickel	1	$129
★	92Ø-227B	Matte Black	1	$113
	92Ø-227BG	Brushed Gold	1	$122

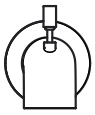

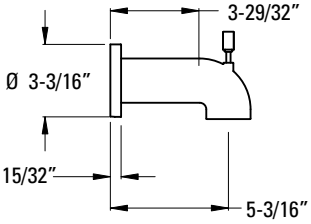

Features:
- All Metal
- Quick Connect Metal Diverting Tub Spout

Non-Diverter Tub Spout

	Model	Finish	Case Qty	List Price
★	92Ø-246A	Polished Chrome	1	$80
	92Ø-246J	Brushed Nickel	1	$113
★	92Ø-246B	Matte Black	1	$127
	92Ø-246BG	Brushed Gold	1	$127

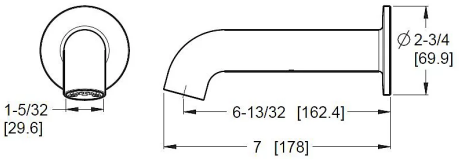

Features:
- All Metal
- Matches Contempra Style & Finishes

Brislin™

Core Offering | CEC Compliant | Cal Green Compliant | Meets EPA WaterSenseSM Standards | NSF Lead-Free Certified | ADA Compliant | UltraSeal™ | SecurePfit™

18" Towel Bar

	Model	Finish	Case Qty	List Price
★	BTB-NC1C	Polished Chrome	3	$67
	BTB-NC1K	Brushed Nickel	3	$91
★	BTB-NC1B	Matte Black	3	$112
	BTB-NC1BG	Brushed Gold	3	$106

Technical Info

Holes: · 2-Hole

Features:
- Premium Metal Construction
- Standard Mounting Bracket
- Concealed Screw Installation
- Mounting Hardware Included

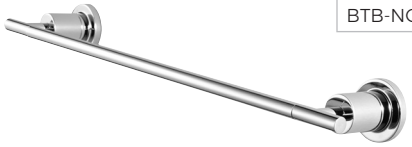

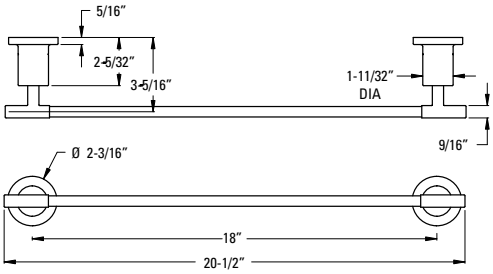

24" Towel Bar

	Model	Finish	Case Qty	List Price
★	BTB-NC2C	Polished Chrome	3	$73
	BTB-NC2K	Brushed Nickel	3	$99
★	BTB-NC2B	Matte Black	3	$125
	BTB-NC2BG	Brushed Gold	3	$115

Holes: · 2-Hole

Features:
- Premium Metal Construction
- Standard Mounting Bracket
- Concealed Screw Installation
- Mounting Hardware Included

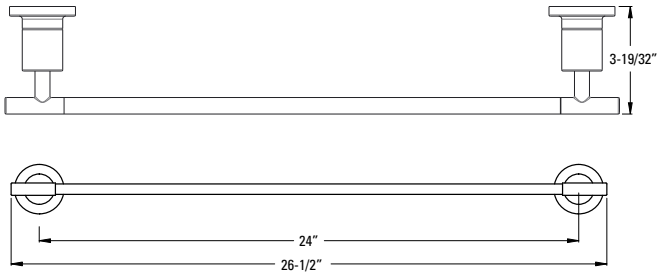

Towel Ring

	Model	Finish	Case Qty	List Price
★	BRB-NC1C	Polished Chrome	3	$53
	BRB-NC1K	Brushed Nickel	3	$67
★	BRB-NC1B	Matte Black	3	$91
	BRB-NC1BG	Brushed Gold	3	$84

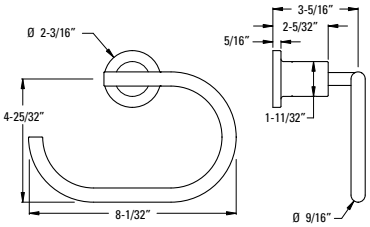

Technical Info

Holes: · 1-Hole

Features:
- Premium Metal Construction
- Standard Mounting Bracket
- Concealed Screw Installation
- Mounting Hardware Included

Paper Holder

	Model	Finish	Case Qty	List Price
★	BPH-NC1C	Polished Chrome	3	$53
	BPH-NC1K	Brushed Nickel	3	$73
★	BPH-NC1B	Matte Black	3	$91
	BPH-NC1BG	Brushed Gold	3	$84

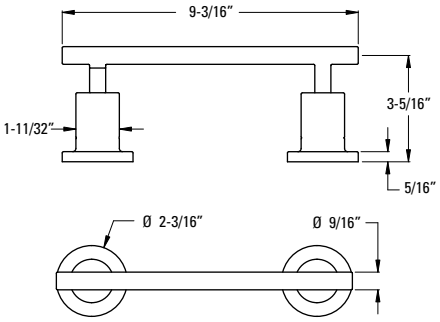

Holes: · 2-Hole

Features:
- Premium Metal Construction
- Standard Mounting Bracket
- Concealed Screw Installation
- Mounting Hardware Included
- Swivel Mount Paper Holder

Robe Hook

	Model	Finish	Case Qty	List Price
★	BRH-NC1C	Polished Chrome	3	$40
	BRH-NC1K	Brushed Nickel	3	$53
★	BRH-NC1B	Matte Black	3	$69
	BRH-NC1BG	Brushed Gold	3	$62

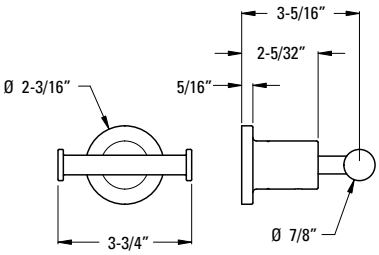

Holes: · 1-Hole

Features:
- Premium Metal Construction
- Standard Mounting Bracket
- Concealed Screw Installation
- Mounting Hardware Included

Brislin™

Core Offering · CEC Compliant · Cal Green Compliant · Meets EPA WaterSenseSM Standards · NSF Lead-Free Certified · ADA Compliant · UltraSeal™ · SecurePfit™

Deckard

The Deckard Collection embodies soft-modern design by incorporating curves into the familiar sleek, hard-edge motif of modern aesthetics. The clean, horizontal lines in this design create a precise look as the contrasting subtle curves offer balance. The small footprint of this faucet and the thin profile of the spout and handle make this a clean design that is optimal for any modern space.

Single Control Lavatory

	Model	Finish	Case Qty	List Price	
★	LG42-DAPC	Polished Chrome	3	$222	
★	LG42-DAPK	Brushed Nickel	3	$267	
★	LG42-DAPB	Matte Black	3	$311	
★	961-23ØA	Polished Chrome	1	$11	Deckplates
★	961-23ØJ	Brushed Nickel	1	$15	
★	961-23ØB	Matte Black	1	$20	

Technical Info

Holes: · 1-Hole Installation

Features:
- Ceramic Disc Valve
- Metal Lever Handle
- High Temp Limit Stop
- Single Post Mounting Ring
- Optional 3-Hole Installation Deck Plate Available, Order 961-23Ø* Separately
- Push & Seal Drain Included
- 1.2 gpm @ 6Ø psi

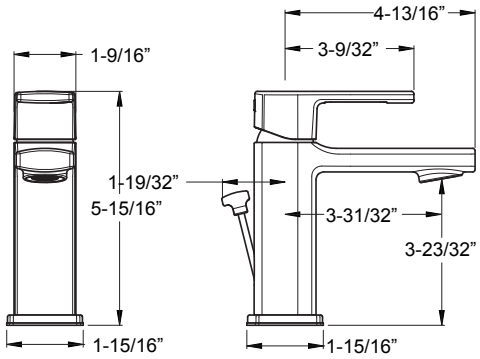

8" Widespread Lavatory

★	LG49-DAPC	Polished Chrome	3	$377
★	LG49-DAPK	Brushed Nickel	3	$422
★	LG49-DAPB	Matte Black	3	$467

Holes: · 3-Hole 8” Installation

Features:
- Ceramic Disc Valves
- Metal Lever Handles
- Fixed Spout
- Push & Seal Drain Included
- Order 971-Ø86Ø to Increase Max. Install Depth to 3"
- 1.2 gpm @ 6Ø psi

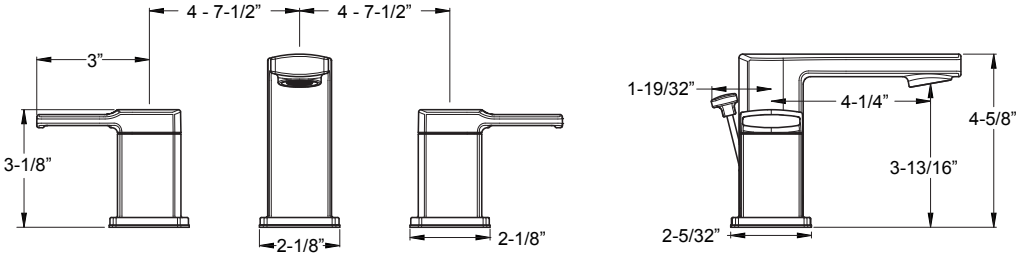

Core Offering · CEC Compliant · Cal Green Compliant · Meets EPA WaterSenseSM Standards · NSF Lead-Free Certified · ADA Compliant · UltraSeal™ · SecurePfit™

1-Hole Roman Tub

	Model	Finish	Case Qty	List Price
★	RT6-1DAC	Polished Chrome	3	$356
★	RT6-1DAK	Brushed Nickel	3	$400
★	RT6-1DAB	Matte Black	3	$445

Technical Info

Holes: · 1-Hole

Features:
- Ceramic Disc Valve
- Metal Lever Handle
- Fixed Spout
- 1/2" NPSM Inlet Lines

Valve Included. No Additional Valving Needed.

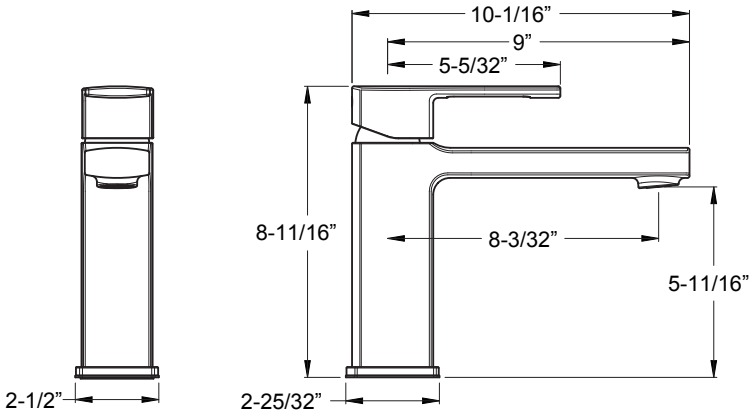

2-Hole Roman Tub

	Model	Finish	Case Qty	List Price
★	RT6-2DAC	Polished Chrome	3	$501
★	RT6-2DAK	Brushed Nickel	3	$556
★	RT6-2DAB	Matte Black	3	$612

Holes: · 2-Hole

Features:
- Ceramic Disc Valve
- Metal Lever Handle
- Fixed Spout
- Handheld Shower
- 1/2" NPSM Inlet Lines
- Hand Shower 1.8 gpm @ 6Ø psi

Valve Included. No Additional Valving Needed.

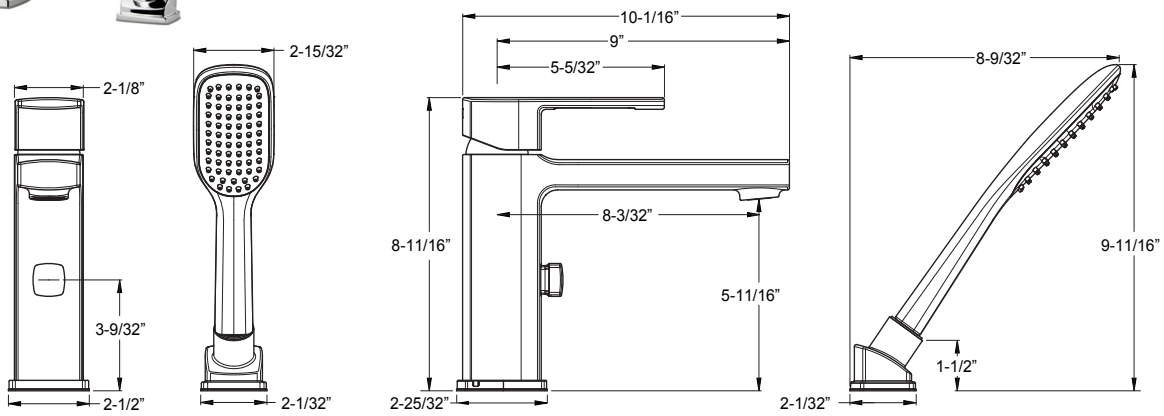

Core Offering · CEC Compliant · Cal Green Compliant · Meets EPA WaterSenseSM Standards · NSF Lead-Free Certified · ADA Compliant · UltraSeal™ · SecurePfit™

	Model	Finish	Case Qty	List Price
3-Hole Roman Tub Trim	★ RT6-5DAC	Polished Chrome	3	$334
	★ RT6-5DAK	Brushed Nickel	3	$378
	★ RT6-5DAB	Matte Black	3	$422

Technical Info

Holes: · 3-Hole

Features:
· Ceramic Disc Valves
· Metal Lever Handles
· Fixed Spout

Must Order ØX6-Ø5ØR or ØX6-15ØR Rough In Valve Separately. See Valve Section.

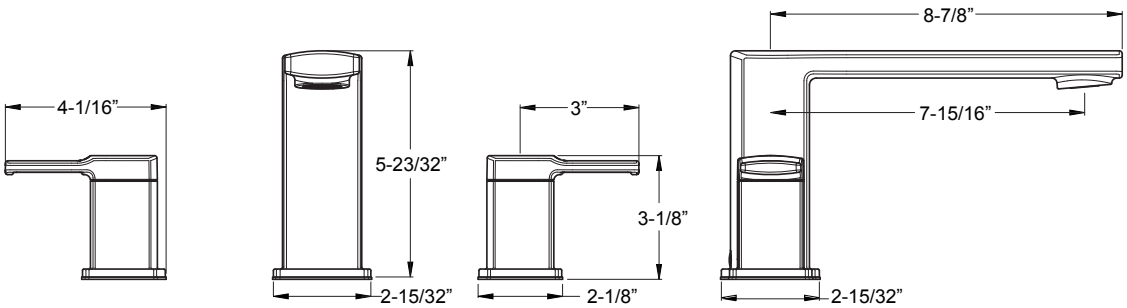

Core Offering · CEC Compliant · Cal Green Compliant · Meets EPA WaterSenseSM Standards · NSF Lead-Free Certified · ADA Compliant · UltraSeal™ · SecurePfit™

Pressure Balance Tub & Shower Trim

	Model	Finish	Case Qty	List Price
★	LG89-8DAC	Polished Chrome	3	$267
★	LG89-8DAK	Brushed Nickel	3	$333
★	LG89-8DAB	Matte Black	3	$400

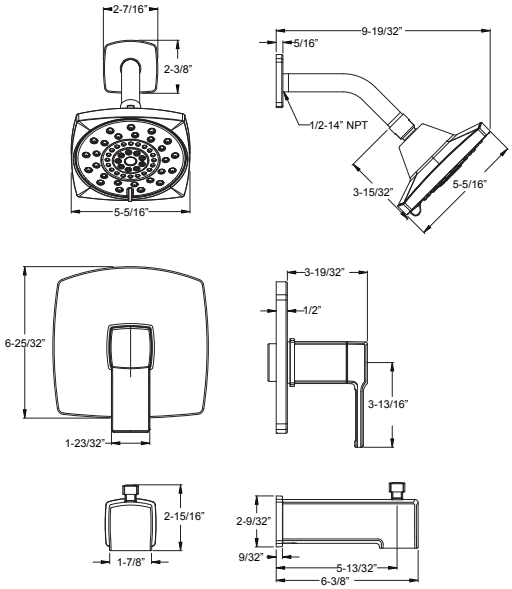

Technical Info

Features:
- SecurePfit™
- Metal Lever Handle
- Hot/Cold Indicator
- Multi-Function Showerhead (3 Functions: Penetrating Massage, Rain Spray, and Invigorating Spray)
- Easy To Clean Spray Nozzles
- IP and Removable Quick Connect Metal Diverter Tub Spout
- Order 941-Ø55 for 1.5 gpm Showerhead Insert
- Showerhead 1.8 gpm @ 8Ø psi

ØX8-34ØA
ØX8-31ØA

Pressure Balance Shower Trim

	Model	Finish	Case Qty	List Price
★	LG89-7DAC	Polished Chrome	3	$178
★	LG89-7DAK	Brushed Nickel	3	$222
★	LG89-7DAB	Matte Black	3	$267

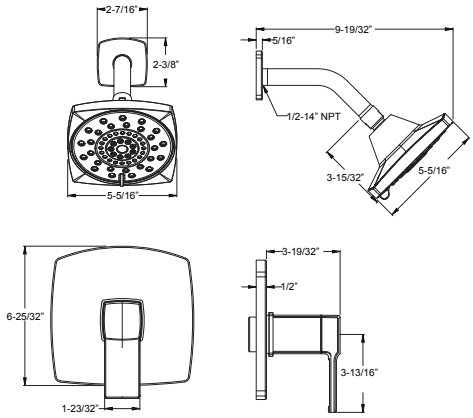

Features:
- SecurePfit™
- Metal Lever Handle
- Hot/Cold Indicator
- Multi-Function Showerhead (3 Functions: Penetrating Massage, Rain Spray, and Invigorating Spray)
- Easy To Clean Spray Nozzles
- Order 941-Ø55 for 1.5 gpm Showerhead Insert
- Showerhead 1.8 gpm @ 8Ø psi

ØX8-34ØA
ØX8-31ØA

Core Offering | CEC Compliant | Cal Green Compliant | Meets EPA WaterSenseSM Standards | NSF Lead-Free Certified | ADA Compliant | UltraSeal™ | SecurePfit™

Slide Bar/Hand Shower Kit

Model	Finish	Case Qty	List Price
★ LG16-3DFC	Polished Chrome	3	$457
★ LG16-3DFK	Brushed Nickel	3	$608
★ LG16-3DFB	Matte Black	3	$709

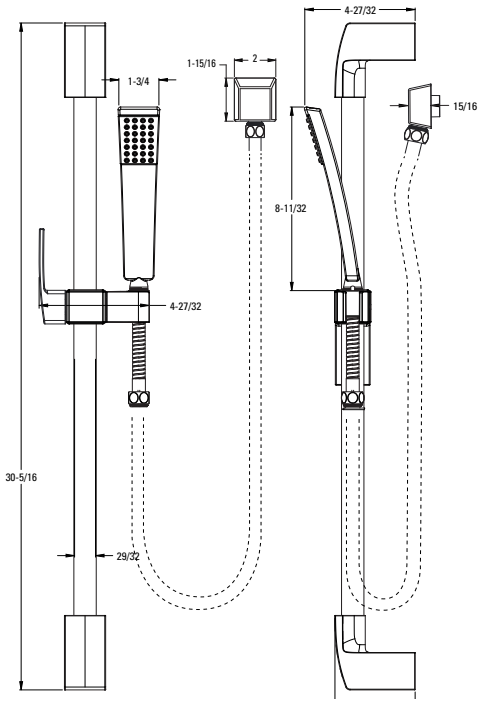

Technical Info

Features:
- Complete Slide Bar Package with Hand Held Shower, Hose, Drop Elbow, and Slide Bar
- Wall Mount Bracket and Drop Elbow
- Easy To Clean Spray Nozzles
- 60" Metal Hose with Matching Finish
- Back Flow Prevention
- Works with Kenzo Diverter Trim and Valve
- Not to be Used as a Grab Bar
- Hand Shower 1.8 gpm @ 80 psi

3 Piece Handshower Set

★ LG16-2DFC	Polished Chrome	1	$244
★ LG16-2DFK	Brushed Nickel	1	$379
★ LG16-2DFB	Matte Black	1	$389

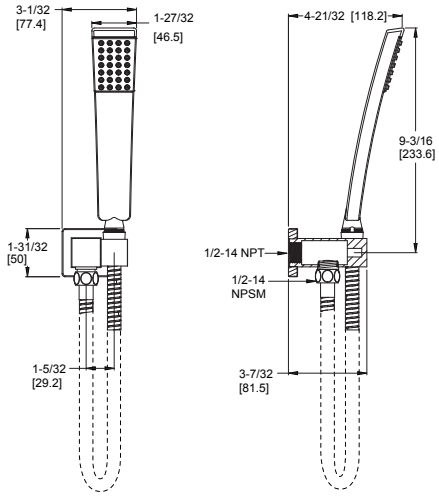

Features:
- 1.8 GPM Flow Rate
- 60" Metal Hose
- All Metal Construction
- Easy to Clean Nozzles
- Mounting Hardware Included
- Valve Not Included
- Pforever Warranty®

Core Offering | CEC Compliant | Cal Green Compliant | Meets EPA WaterSenseSM Standards | NSF Lead-Free Certified | ADA Compliant | UltraSeal™ | SecurePfit™

Showerhead

	Model	Finish	Case Qty	List Price
★	973-314A	Polished Chrome	1	$42
★	973-314J	Brushed Nickel	1	$58
★	973-314B	Matte Black	1	$78

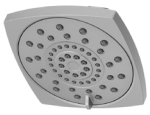

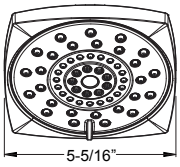

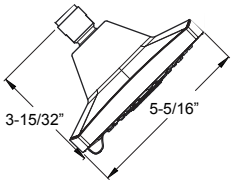

Technical Info

Features:
- Three-Function Showerhead
- 3 Functions:
  - Penetrating Massage
  - Rain Spray
  - Invigorating Spray
- Easy To Clean Spray Nozzles
- Order 941-Ø55 for 1.5 gpm Showerhead Insert
- Showerhead 1.8 gpm @ 80 psi

10 in. Square Showerhead, Arm and Flange

★	LG15-MDS1C	Polished Chrome	3	$201
★	LG15-MDS1B	Matte Black	3	$223

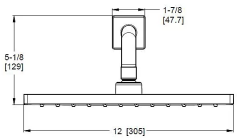

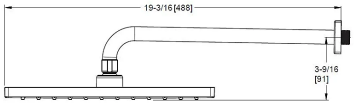

Features:
- All Metal Construction
- Easy To Clean Spray Nozzles
- Shower Arm and Flange Sold Separately

Raincan Showerhead

★	LG15-MFØK	Brushed Nickel	1	$127

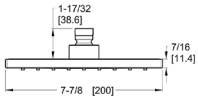

Features:
- All Metal Construction
- Easy To Clean Spray Nozzles
- Full spray provides more coverage and even flow
- Shower Arm and Flange Sold Separately

Core Offering | CEC Compliant | Cal Green Compliant | Meets EPA WaterSenseSM Standards | NSF Lead-Free Certified | ADA Compliant | UltraSeal™ | SecurePfit™

Pressure Balance Valve Only Trim

Model	Finish	Case Qty	List Price
R89-1DAC	Polished Chrome	6	$111
R89-1DAK	Brushed Nickel	6	$139
R89-1DAB	Matte Black	6	$155

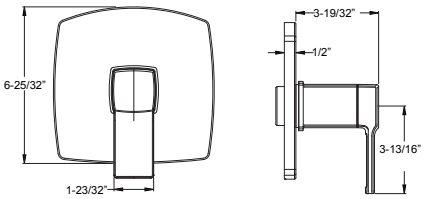

Technical Info

Features:
- SecurePfit™
- Metal Lever Handle
- Hot/Cold Indicator

ØX8-34ØA
ØX8-31ØA

Diverter Trim Only

	Ø16-DAØC	Polished Chrome	3	$67
	Ø16-DAØK	Brushed Nickel	3	$83
	Ø16-DAØB	Matte Black	3	$100

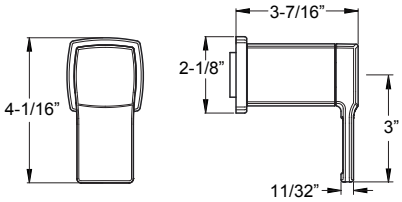

Features:
- SecurePfit™
- Metal Lever Handle and Matching Flange

Must order Ø15-3WDNSS (Non-Shared, Cal Green Compliant) or Ø15-6WDSS (Shared) Stacked Rough-In Valve Separately. See Valve Section.

Stacked Valve Only Trim

★	R89-SDAC	Polished Chrome	6	$296
★	R89-SDAK	Brushed Nickel	6	$332
★	R89-SDAB	Matte Black	6	$363

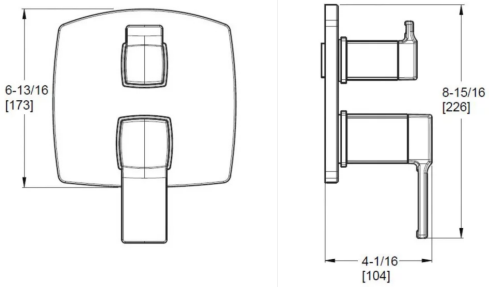

Features:
- SecurePfit™
- Metal Lever Handle
- Hot/Cold Indicator

Must order Ø15-3WDNSS (Non-Shared, Cal Green Compliant) or Ø15-6WDSS (Shared) Stacked Rough-In Valve Separately. See Valve Section.

Square Non-Diverter Tub Spout

★	92Ø-2Ø8A	Polished Chrome	10	$96
★	92Ø-2Ø8J	Brushed Nickel	10	$117
★	92Ø-2Ø8B	Matte Black	10	$124

Features:
- All Metal Construction
- Includes copper sweat adapter

Core Offering · CEC Compliant · Cal Green Compliant · Meets EPA WaterSenseSM Standards · NSF Lead-Free Certified · ADA Compliant · UltraSeal™ · SecurePfit™

Square Non-Diverter Tub Spout

	Model	Finish	Case Qty	List Price
★	92Ø-247A	Polished Chrome	10	$87
★	92Ø-247J	Brushed Nickel	10	$121
★	92Ø-247B	Matte Black	10	$131

Technical Info

Features:
- All Metal
- Includes copper sweat adapter

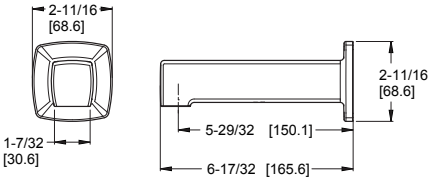

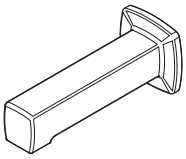

Straight Shower Arm

	Model	Finish	Case Qty	List Price
★	973-1Ø3A	Polished Chrome	1	$59
★	973-1Ø3J	Brushed Nickel	1	$71
★	973-1Ø3Y	Tuscan Bronze	1	$87
	973-1Ø3D	Polished Nickel	1	$121
★	973-1Ø3B	Matte Black	1	$130
	973-1Ø3BG	Brushed Gold	1	$159

Features:
- All Metal
- Matches Deckard Style & Finishes

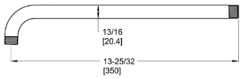

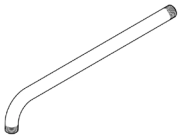

Curved Shower Arm

	Model	Finish	Case Qty	List Price
★	973-Ø3ØA	Polished Chrome	1	$17
★	973-Ø3ØJ	Brushed Nickel	1	$40
	973-Ø3ØY	Tuscan Bronze	1	$27
	973-Ø3ØD	Polished Nickel	1	$25
★	973-Ø3ØB	Matte Black	1	$23
	973-Ø3ØBG	Brushed Gold	1	$34

Features:
- Brass Shower Arm
- 1/2" NPT Male Connections

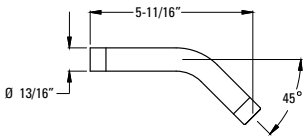

Shower Arm Flange

	Model	Finish	Case Qty	List Price
★	96Ø-331A	Polished Chrome	1	$9
★	96Ø-331J	Brushed Nickel	1	$10
★	96Ø-331B	Matte Black	1	$11

Features:
- All Metal
- Matches Deckard Style & Finishes

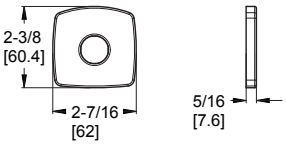

★ Core Offering · CEC Compliant · Cal Green Compliant · Meets EPA WaterSenseSM Standards · NSF Lead-Free Certified · ADA Compliant · UltraSeal™ · SecurePfit™

18" Towel Bar

	Model	Finish	Case Qty	List Price
★	BTB-DA1C	Polished Chrome	3	$61
★	BTB-DA1K	Brushed Nickel	3	$83
★	BTB-DA1B	Matte Black	3	$95

Technical Info

Holes: · 2-Hole

Features:
- All Metal Construction
- Standard Mounting Brackets
- Concealed Screw Installation
- Mounting Hardware Included

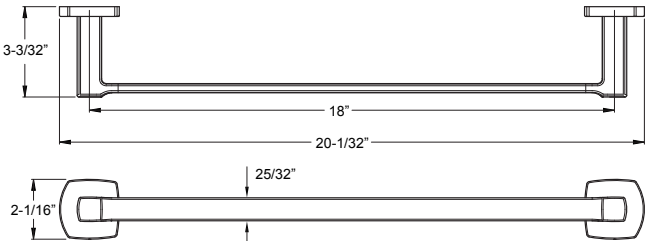

24" Towel Bar

	Model	Finish	Case Qty	List Price
★	BTB-DA2C	Polished Chrome	3	$72
★	BTB-DA2K	Brushed Nickel	3	$95
★	BTB-DA2B	Matte Black	3	$105

Holes: · 2-Hole

Features:
- All Metal Construction
- Standard Mounting Brackets
- Concealed Screw Installation
- Mounting Hardware Included

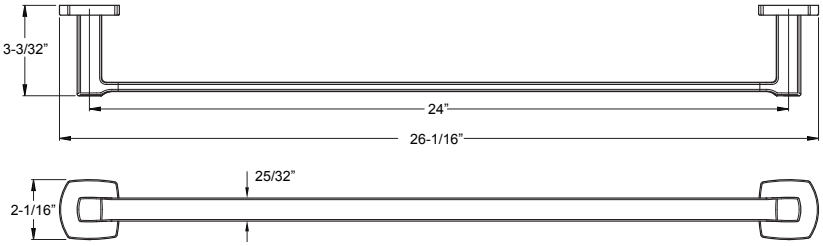

Towel Ring

	Model	Finish	Case Qty	List Price
★	BRB-DA1C	Polished Chrome	8	$49
★	BRB-DA1K	Brushed Nickel	8	$61
★	BRB-DA1B	Matte Black	8	$72

Holes: · 1-Hole

Features:
- All Metal Construction
- Standard Mounting Brackets
- Concealed Screw Installation
- Mounting Hardware Included

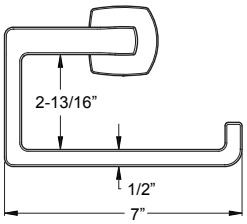

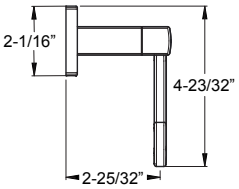

Core Offering · CEC Compliant · Cal Green Compliant · Meets EPA WaterSenseSM Standards · NSF Lead-Free Certified · ADA Compliant · UltraSeal™ · SecurePfit™

Paper Holder

	Model	Finish	Case Qty	List Price
★	BPH-DA1C	Polished Chrome	3	$56
★	BPH-DA1K	Brushed Nickel	3	$72
★	BPH-DA1B	Matte Black	3	$83

Technical Info

Holes: · 2-Hole

Features:
- Swivel Mount Paper Holder
- All Metal Construction
- Standard Mounting Brackets
- Concealed Screw Installation
- Mounting Hardware Included

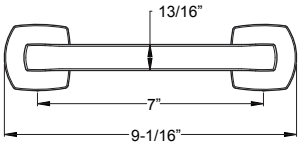

Robe Hook

	Model	Finish	Case Qty	List Price
★	BRH-DA1C	Polished Chrome	12	$22
★	BRH-DA1K	Brushed Nickel	12	$28
★	BRH-DA1B	Matte Black	12	$33

Holes: · 1-Hole

Features:
- All Metal Construction
- Standard Mounting Brackets
- Concealed Screw Installation
- Mounting Hardware Included

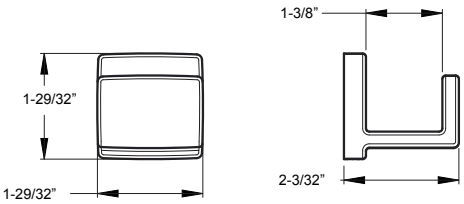

Core Offering · CEC Compliant · Cal Green Compliant · Meets EPA WaterSenseSM Standards · NSF Lead-Free Certified · ADA Compliant · UltraSeal™ · SecurePfit™

Kenzo

A New Wave of Modern. A bathroom designed with Kenzo water fixtures relaxes your mind and body. The Kenzo collection focuses on the basics: Water experience in its simplest form. Calm lines, and clear function - delivering water in a unique band. A delight for any kind of dwelling.

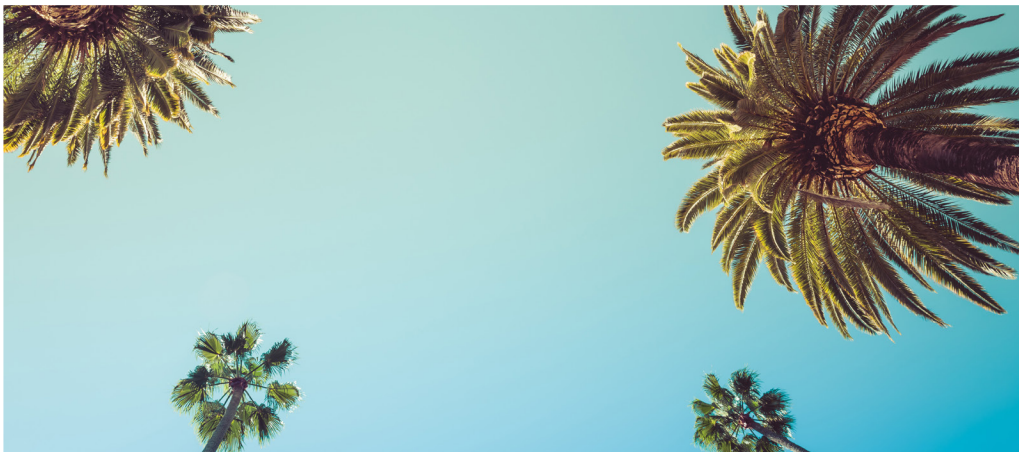

Single Control Lavatory Faucet

Model	Finish	Case Qty	List Price
LG42-DF1C	Polished Chrome	3	$341
LG42-DF1K	Brushed Nickel	3	$431
LG42-DF1B	Matte Black	3	$583

961-060A	Polished Chrome	1	$24	Deckplates
961-060J	Brushed Nickel	1	$26	
961-060B	Matte Black	1	$30	

Technical Info

Holes: · 1 or 3-Hole 4" Installation

Features:
- Ceramic Disc Valve
- Metal Lever Handle
- Laminar Flow
- Pfast Connect™
- Single Post Mounting Ring
- 3-Hole Deckplate Included
- All Metal Pop-Up
- Pforever Seal Ceramic Disc Valve
- 1.2 gpm @ 60 psi

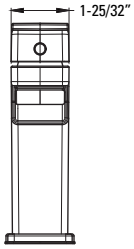

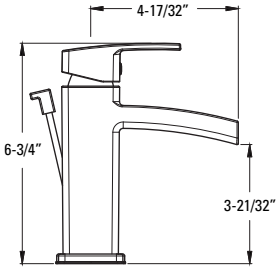

8" Widespread Lavatory

Model	Finish	Case Qty	List Price
LG49-DF2C	Polished Chrome	3	$399
LG49-DF2K	Brushed Nickel	3	$564
LG49-DF2B	Matte Black	3	$776

Holes: · 3-Hole 8-15" Installation

Features:
- Ceramic Disc Valves
- Metal Lever Handles
- All Metal Pop-Up
- Quick Connect Hose Assembly
- Order 971-Ø86Ø to Increase Max. Install Depth to 3"
- 1.2 gpm @ 60 psi

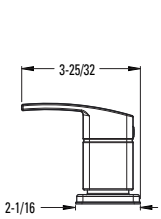

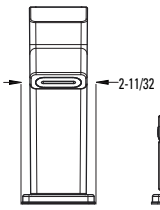

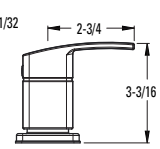

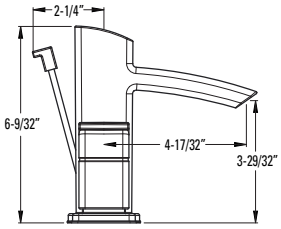

Core Offering · CEC Compliant · Cal Green Compliant · Meets EPA WaterSenseSM Standards · NSF Lead-Free Certified · ADA Compliant · UltraSeal™ · SecurePfit™

8" Wall Mount Lavatory

Model	Finish	Case Qty	List Price
LG49-DF3C	Polished Chrome	3	$413
LG49-DF3K	Brushed Nickel	3	$543
LG49-DF3B	Matte Black	3	$673

Technical Info

Holes: · 3-Hole 8" Installation

Features:
· Ceramic Disc Valves
· Metal Lever Handles
· Grid Strainer Sold Seperately
· 1.2 gpm @ 60 psi

Must Order Wall Mount Rough In Valve Separately.
LØW8-01ØØ
See Valve Section.

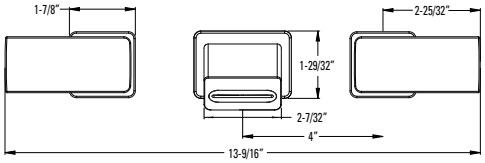

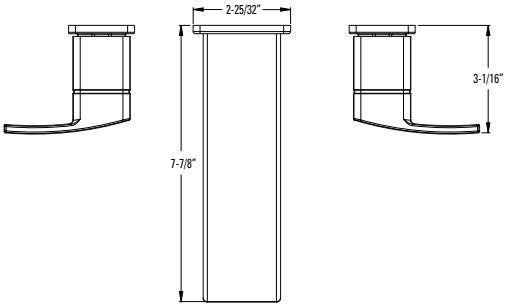

3-Hole Roman Tub Trim

RT6-5D1C	Polished Chrome	3	$588
RT6-5D1K	Brushed Nickel	3	$705
RT6-5D1B	Matte Black	3	$887

Holes: · 3-Hole

Features:
· Ceramic Disc Valves
· Metal Lever Handles
· Fixed Spout

Must Order ØX6-Ø5ØR or ØX6-15ØR Rough In Valve Separately. See Valve Section.

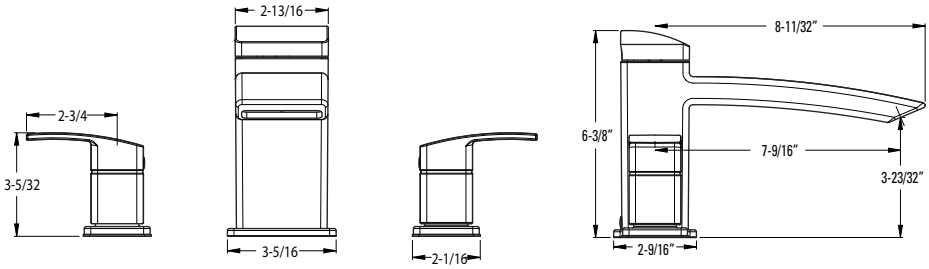

Core Offering · CEC Compliant · Cal Green Compliant · Meets EPA WaterSenseSM Standards · NSF Lead-Free Certified · ADA Compliant · UltraSeal™ · SecurePfit™

Pressure Balance Tub & Shower Trim

Model	Finish	Case Qty	List Price
LG89-8DFC	Polished Chrome	3	$309
LG89-8DFK	Brushed Nickel	3	$463
LG89-8DFB	Matte Black	3	$641

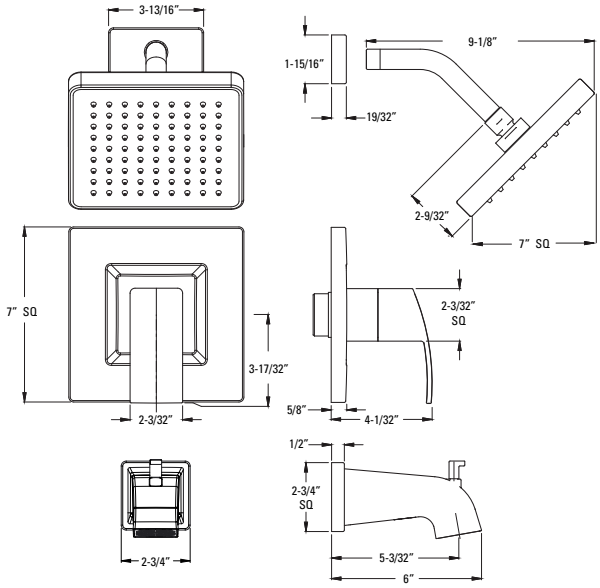

Technical Info

Features:
- SecurePfit™
- Metal Lever Handle
- Hot/Cold Indicator
- Decorative Raincan Showerhead
- Easy To Clean Spray Nozzles
- Quick Connect Metal Diverter Tub Spout
- Order 941-Ø55Ø for 1.5 gpm Showerhead Insert
- Showerhead 1.8 gpm @ 80 psi

ØX8-34ØA
ØX8-31ØA

Pressure Balance Shower Trim

LG89-7DFC	Polished Chrome	3	$263
LG89-7DFK	Brushed Nickel	3	$414
LG89-7DFB	Matte Black	3	$505

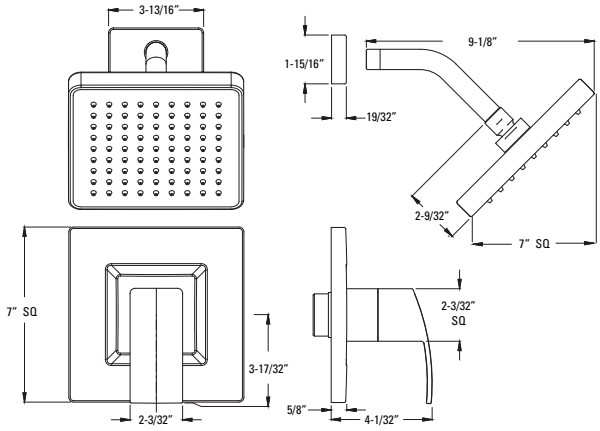

Features:
- SecurePfit™
- Metal Lever Handle
- Hot/Cold Indicator
- Decorative Raincan Showerhead
- Easy To Clean Spray Nozzles
- Order 941-Ø55Ø for 1.5 gpm Showerhead Insert
- Showerhead 1.8 gpm @ 80 psi

ØX8-34ØA
ØX8-31ØA

Core Offering | CEC Compliant | Cal Green Compliant | Meets EPA WaterSenseSM Standards | NSF Lead-Free Certified | ADA Compliant | UltraSeal™ | SecurePfit™

Pressure Balance Valve Only Trim

Model	Finish	Case Qty	List Price
R89-1DFC	Polished Chrome	3	$183
R89-1DFK	Brushed Nickel	3	$288
R89-1DFB	Matte Black	3	$296

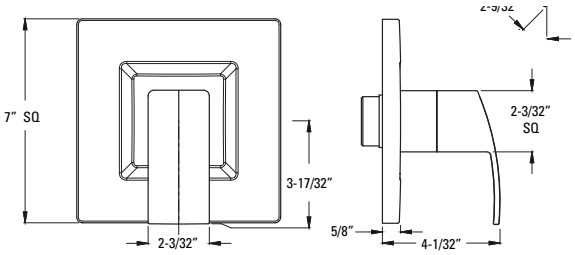

Technical Info

Features:
- SecurePfit™
- Metal Lever Handle
- Hot/Cold Indicator

ØX8-34ØA
ØX8-31ØA

Diverter Trim Only

Ø16-DFØC	Polished Chrome	3	$124
Ø16-DFØB	Matte Black	3	$181

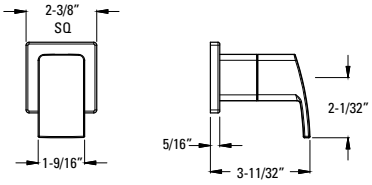

Features:
- SecurePfit™
- Metal Lever Handle and Matching Flange

Must order Ø15-3WDNS (Non-Shared, Cal Green Compliant) or Ø15-6WDS (Shared) Rough-In Valve Separately. See Valve Section.

Slide Bar/Hand Shower Kit

★	LG16-3DFC	Polished Chrome	3	$457
★	LG16-3DFK	Brushed Nickel	3	$608
★	LG16-3DFB	Matte Black	3	$709

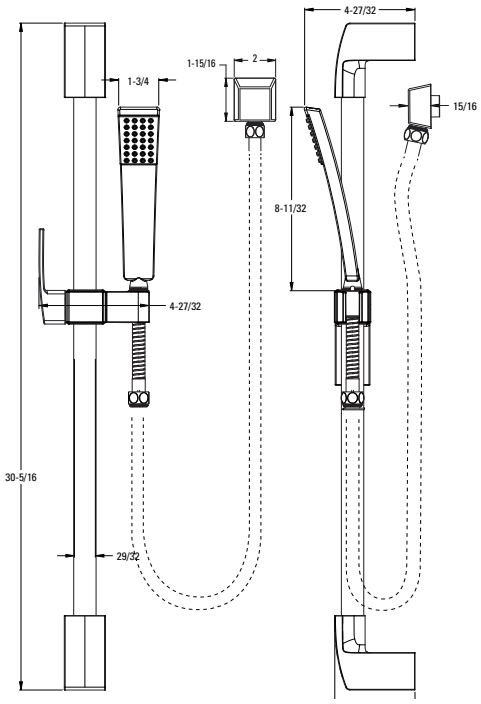

Features:
- Complete Slide Bar Package with Hand Held Shower, Hose, Drop Elbow, and Slide Bar
- Wall Mount Bracket and Drop Elbow
- Easy To Clean Spray Nozzles
- 60" Metal Hose with Matching Finish
- Back Flow Prevention
- Works with Kenzo Diverter Trim and Valve
- Not to be Used as a Grab Bar
- Hand Shower 1.8 gpm @ 80 psi

★ Core Offering | CEC Compliant | Cal Green Compliant | Meets EPA WaterSenseSM Standards | NSF Lead-Free Certified | ADA Compliant | UltraSeal™ | SecurePfit™

3 Piece Handheld Shower Kit

	Model	Finish	Case Qty	List Price
★	LG16-2DFC	Polished Chrome	1	$244
★	LG16-2DFK	Brushed Nickel	1	$379
★	LG16-2DFB	Matte Black	1	$389

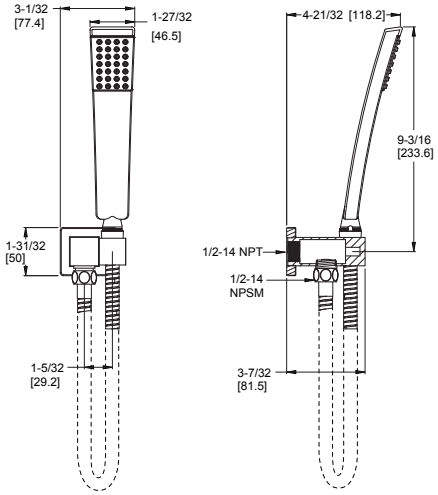

Technical Info

Features:
- 1.8 GPM Flow Rate
- 60" Metal Hose
- All Metal Construction
- Easy to Clean Nozzles
- Mounting Hardware Included
- Valve Not Included
- Pforever Warranty®

2-Handle Complete Roman Tub Trim with Handheld Shower

LG6-4D1B	Matte Black	1	$1,115

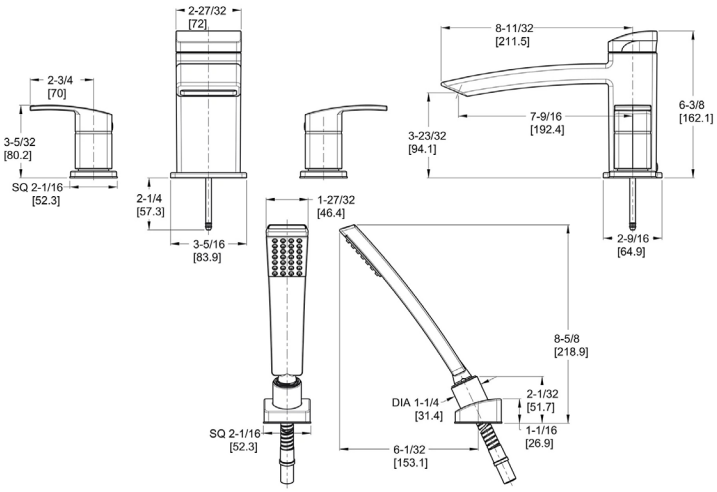

Features:
- 1.8 GPM Flow Rate
- Includes coordinating tub hand shower
- Mid-arc spout to help provide easy access
- All Metal Construction
- Easy to Clean Nozzles
- Mounting Hardware Included
- Valve Not Included
- Pforever Warranty®

Core Offering | CEC Compliant | Cal Green Compliant | Meets EPA WaterSenseSM Standards | NSF Lead-Free Certified | ADA Compliant | UltraSeal™ | SecurePfit™

Raincan Showerhead

Model	Finish	Case Qty	List Price
★ 973-228A	Polished Chrome	1	$108
★ 973-228J	Brushed Nickel	1	$139
★ 973-228B	Matte Black	1	$195

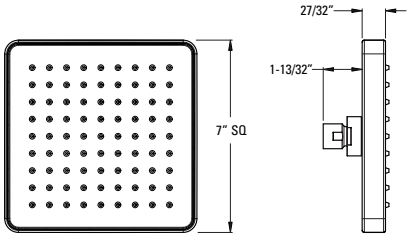

Technical Info

Features:
- Raincan Showerhead
- Easy To Clean Spray Nozzles
- Brass Ball Joint
- Shower Arm and Flange Sold Separately
- Order 941-Ø55Ø for 1.5 gpm Showerhead Insert
- Showerhead 1.8 gpm @ 80 psi

10 in. Square Showerhead, Arm and Flange

★ LG15-MDS1C	Polished Chrome	3	$201
★ LG15-MDS1B	Matte Black	3	$491

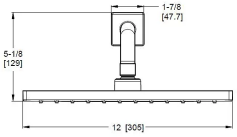

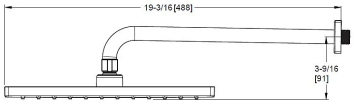

Features:
- All Metal Construction
- Easy To Clean Spray Nozzles
- Shower Arm and Flange Sold Separately

Raincan Showerhead

★ LG15-MF0K	Polished Chrome	3	$127

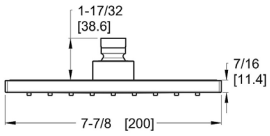

Features:
- Raincan Showerhead
- All Metal Construction
- Easy To Clean Spray Nozzles
- Shower Arm and Flange Sold Separately

Shower Arm Flange

96Ø-Ø97A	Polished Chrome	1	$15
96Ø-Ø97J	Brushed Nickel	1	$20
96Ø-Ø97B	Matte Black	1	$17

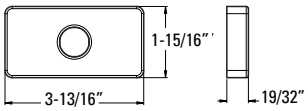

Features:
- All Metal
- Matches Kenzo Style & Finishes

Core Offering | CEC Compliant | Cal Green Compliant | Meets EPA WaterSenseSM Standards | NSF Lead-Free Certified | ADA Compliant | UltraSeal™ | SecurePfit™

Tub Spout

	Model	Finish	Case Qty	List Price
	92Ø-623A	Polished Chrome	1	$76
	92Ø-623J	Brushed Nickel	1	$100
	92Ø-623B	Matte Black	1	$112

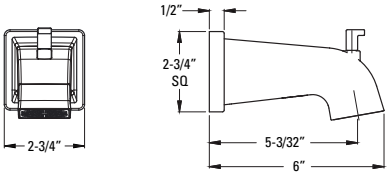

Technical Info

Features:
- All Metal
- IP & Quick Connect Diverted Spout

Straight Shower Arm

	Model	Finish	Case Qty	List Price
★	973-1Ø3A	Polished Chrome	1	$59
★	973-1Ø3J	Brushed Nickel	1	$71
★	973-1Ø3Y	Tuscan Bronze	1	$87
	973-1Ø3D	Polished Nickel	1	$121
★	973-1Ø3B	Matte Black	1	$130
	973-1Ø3BG	Brushed Gold	1	$159

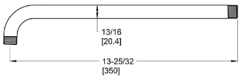

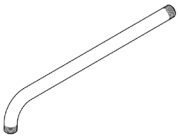

Features:
- All Metal
- Matches Kenzo Style & Finishes

Curved Shower Arm

	Model	Finish	Case Qty	List Price
★	973-Ø3ØA	Polished Chrome	1	$17
★	973-Ø3ØJ	Brushed Nickel	1	$40
	973-Ø3ØY	Tuscan Bronze	1	$27
	973-Ø3ØD	Polished Nickel	1	$25
★	973-Ø3ØB	Matte Black	1	$23
	973-Ø3ØBG	Brushed Gold	1	$34

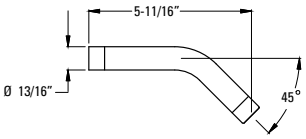

Features:
- Brass Shower Arm
- 1/2" NPT Male Connections

18" Towel Bar

Model	Finish	Case Qty	List Price
BTB-DF1C	Polished Chrome	3	$130
BTB-DF1K	Brushed Nickel	3	$190
BTB-DF1B	Matte Black	3	$197

Technical Info

Holes: · 2-Hole

Features:
· Premium Metal Construction
· Superior Mounting Posts
· Concealed Screw Installation
· Mounting Hardware Included

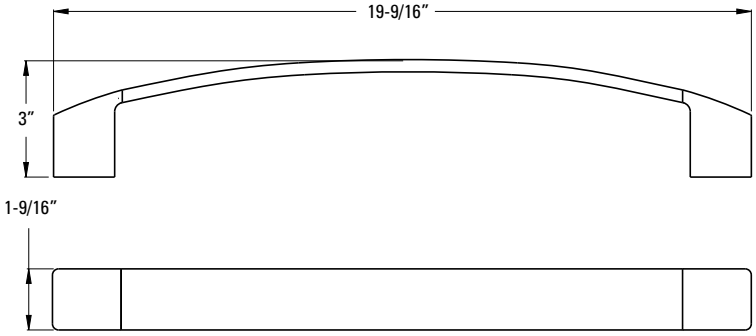

24" Towel Bar

BTB-DF2C	Polished Chrome	3	$159
BTB-DF2K	Brushed Nickel	3	$221
BTB-DF2B	Matte Black	3	$227

Holes: · 2-Hole

Features:
· Premium Metal Construction
· Superior Mounting Posts
· Concealed Screw Installation
· Mounting Hardware Included

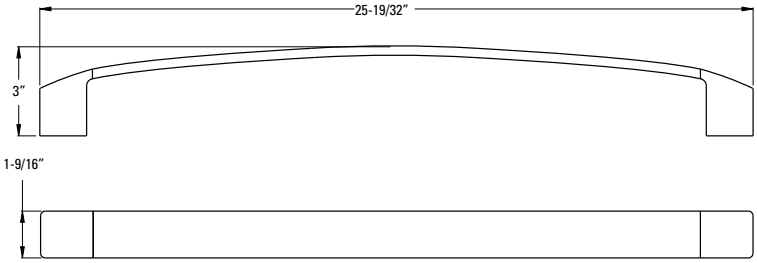

Towel Ring

BRB-DF1C	Polished Chrome	3	$121
BRB-DF1K	Brushed Nickel	3	$167
BRB-DF1B	Matte Black	3	$171

Holes: · 2-Hole

Features:
· Premium Metal Construction
· Superior Mounting Posts
· Concealed Screw Installation
· Mounting Hardware Included

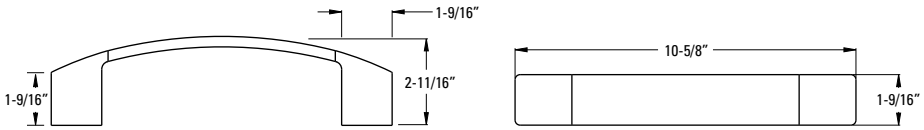

Paper Holder

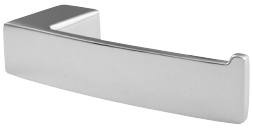

Model	Finish	Case Qty	List Price
BPH-DF1C	Polished Chrome	3	$100
BPH-DF1K	Brushed Nickel	3	$138
BPH-DF1B	Matte Black	3	$144

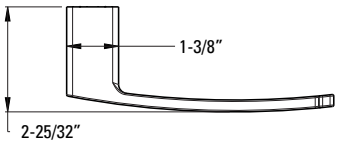

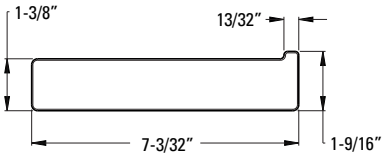

Technical Info

Holes: · 1-Hole

Features:
- Premium Metal Construction
- Superior Mounting Posts
- Concealed Screw Installation
- Mounting Hardware Included

Robe Hook

BRH-DF1C	Polished Chrome	3	$78
BRH-DF1K	Brushed Nickel	3	$108
BRH-DF1B	Matte Black	3	$110

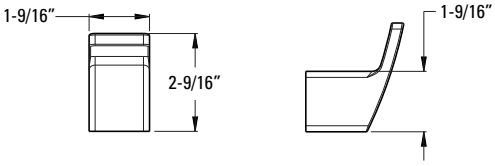

Holes: · 1-Hole

Features:
- Premium Metal Construction
- Superior Mounting Posts
- Concealed Screw Installation
- Mounting Hardware Included

Rhen

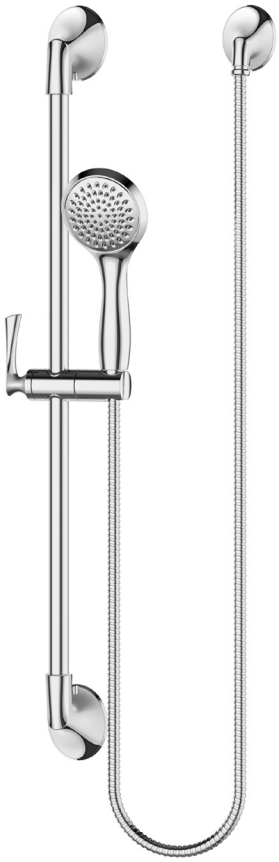

FOLDS THAT FLOW WITH THE NATURAL ELEGANCE OF WATER. RHEN MAKES AN ENTRANCE.

In a world of haste, there is a haven to be found in the graceful folds of Rhen. Hourglass silhouettes echo hand-tailored eveningwear, enchanting from every angle, yet utterly mesmerizing in motion. Inspired by the designer's heirloom wedding gown, the elements of this collection are perfectly imperfect organic pieces that imbue the transitional faucet with a twist of nostalgia.

Single Control Bathroom Faucet

Model	Finish	Case Qty	List Price
LG42-RH2C	Polished Chrome	3	$480
LG42-RH2K	Brushed Nickel	3	$600
LG42-RH2B	Matte Black	3	$640
LG42-RH2BG	Brushed Gold	3	$685

Technical Info

Holes: · 1 or 3-Hole 4" Installation

Features:
- Ceramic Disc Valve
- Metal Lever Handle
- Single Post Mounting Ring
- 3-Hole Deckplate Sold Separately 961-232*
- All Metal Push and Seal
- 1.2 gpm @ 60 psi

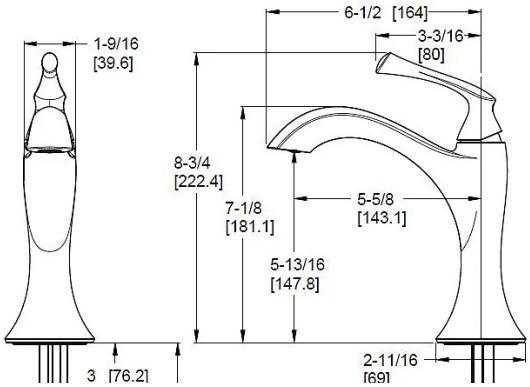

2-Handle 8" Widespread Bathroom Faucet

LG49-RH3C	Polished Chrome	3	$603
LG49-RH3K	Brushed Nickel	3	$754
LG49-RH3B	Matte Black	3	$804
LG49-RH3BG	Brushed Gold	3	$862

Holes: · 3-Hole 8-15" Installation

Features:
- Ceramic Disc Valves
- Metal Lever Handles
- All Metal Push and Seal™
- Order 971-Ø26Ø to Increase Max. Install Depth to 3"
- 1.2 gpm @ 60 psi

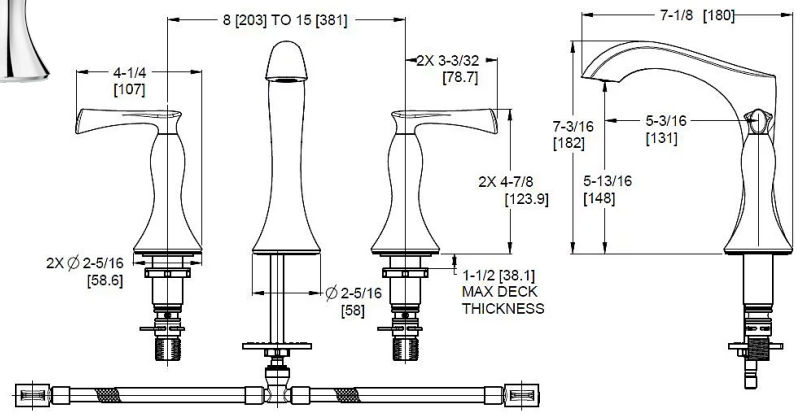

Core Offering · CEC Compliant · Cal Green Compliant · Meets EPA WaterSenseSM Standards · NSF Lead-Free Certified · ADA Compliant · UltraSeal™ · SecurePfit™

2-Handle Wall Mount Bathroom Faucet

Model	Finish	Case Qty	List Price
LG49-RH4C	Polished Chrome	3	$410
LG49-RH4K	Brushed Nickel	3	$512
LG49-RH4B	Matte Black	3	$547
LG49-RH4BG	Brushed Gold	3	$585

Technical Info

Holes:
- 3-Hole 8-15" Installation

Features:
- Ceramic Disc Valves
- Metal Lever Handles
- All Metal Push and Seal™
- Order 971-Ø26Ø to Increase Max. Install Depth to 3"
- 1.2 gpm @ 60 psi

Must Order Valve Separately

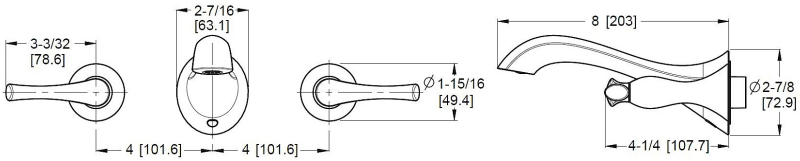

Pressure Balance Tub & Shower Trim

Model	Finish	Case Qty	List Price
LG89-8RHC	Polished Chrome	3	$500
LG89-8RHK	Brushed Nickel	3	$631
LG89-8RHB	Matte Black	3	$699
LG89-8RHBG	Brushed Gold	3	$726

Technical Info

Features:
- SecurePfit™
- Metal Lever Handle
- Hot/Cold Indicator
- All Brass Raincan Showerhead
- IP Connection Only Tub Spout
- Showerhead 1.8 gpm @ 80 psi

ØX8-34ØA
ØX8-31ØA

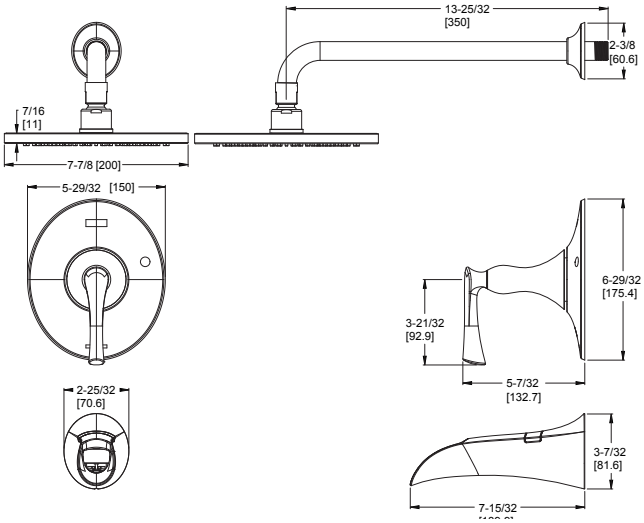

Pressure Balance Shower Trim

LG89-7RHC	Polished Chrome	3	$414
LG89-7RHK	Brushed Nickel	3	$515
LG89-7RHB	Matte Black	3	$580
LG89-7RHBG	Brushed Gold	3	$604

Features:
- SecurePfit™
- Metal Lever Handle
- Hot/Cold Indicator
- All Brass Raincan Showerhead
- Showerhead 1.8 gpm @ 80 psi

ØX8-34ØA
ØX8-31ØA

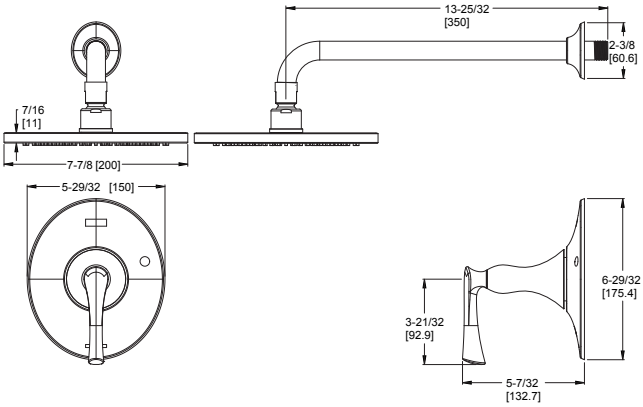

Core Offering | CEC Compliant | Cal Green Compliant | Meets EPA WaterSenseSM Standards | NSF Lead-Free Certified | ADA Compliant | UltraSeal™ | SecurePfit™

Pressure Balance Valve Only Trim

Model	Finish	Case Qty	List Price
R89-1RHC	Polished Chrome	3	$233
R89-1RHK	Brushed Nickel	3	$300
R89-1RHB	Matte Black	3	$323
R89-1RHBG	Brushed Gold	3	$336

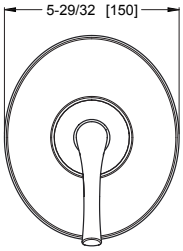

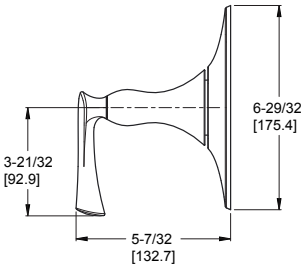

Technical Info

Features:
- SecurePfit™
- Metal Lever Handle
- Hot/Cold Indicator

Must Order Pressure Balance Rough in Valve Separately. See Valve Section.

ØX8-34ØA
ØX8-31ØA

Diverter Trim Only

Ø16-RH1C	Polished Chrome	3	$140
Ø16-RH1K	Brushed Nickel	3	$193
Ø16-RH1B	Matte Black	3	$215
Ø16-RH1BG	Brushed Gold	3	$232

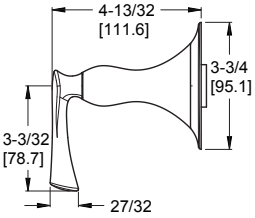

Features:
- Metal Lever Handle and Matching Flange

Must order Ø15-3WDNS (Non-Shared, Cal Green Compliant) or Ø15-6WDS (Shared) Rough-in Valve Separately. See Valve Section)

Core Offering | CEC Compliant | Cal Green Compliant | Meets EPA WaterSenseSM Standards | NSF Lead-Free Certified | ADA Compliant | UltraSeal™ | SecurePfit™

Slide Bar/Hand Shower Kit

Model	Finish	Case Qty	List Price
LG16-3RHC	Polished Chrome	3	$433
LG16-3RHK	Brushed Nickel	3	$572
LG16-3RHB	Matte Black	3	$668
LG16-3RHBG	Brushed Gold	3	$698

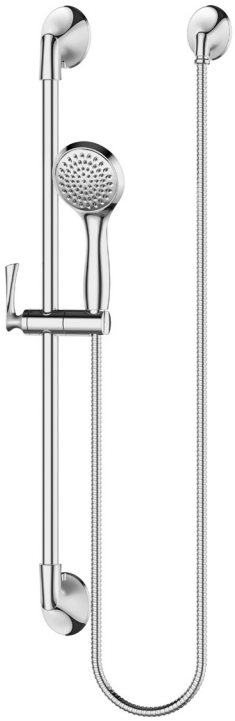

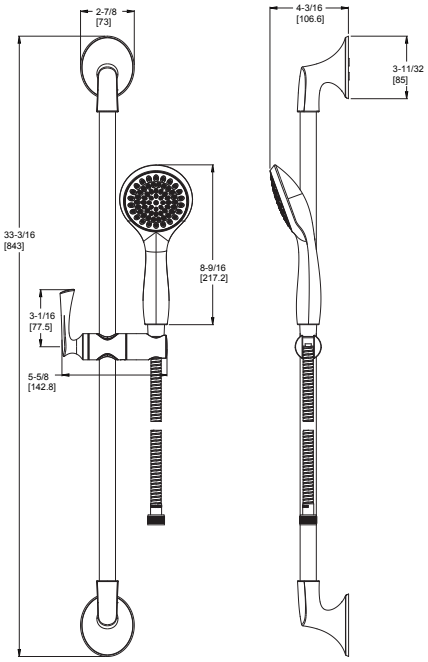

Technical Info

Features:

- Complete Slide Bar Package with Hand Held Shower, Hose, Drop Elbow, and Slide Bar
- Self Cleaning Handheld Showerhead
- 60" Metal Hose with Matching Finish
- Back Flow Prevention
- Works with Rhen Diverter Trim and Valve
- Not to be Used as a Grab Bar
- Hand Shower 1.8 gpm @ 60 psi

Tub Filler with Hand Shower

Model	Finish	Case Qty	List Price
LG6-1RH1C	Polished Chrome	1	$1,880
LG6-1RH1K	Brushed Nickel	1	$2,430
LG6-1RH1B	Matte Black	1	$2,510
LG6-1RH1BG	Brushed Gold	1	$2,700

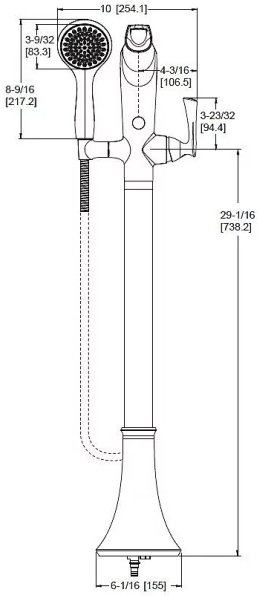

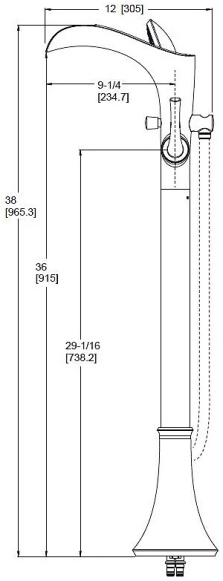

Technical Info

Holes: · 1-Hole Installation

Features:
- Modern Trough Design
- Ceramic Disc Valve
- Metal Lever Handles
- Brass Construction
- 8 gpm @ 60 psi
- Hand Shower 1.8 gpm @ 80 psi

Must Order Free-Standing Rough In Valve Separately

Universal
1-Hole Free-Standing Rough-in Valve

ØX627ØR	N/A	3	$321

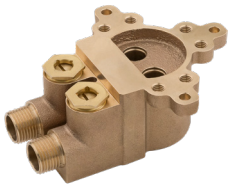

Features:
- All Metal Construction
- Mounting Hardware Included
- All Brass Rough-In Valve Body to be Installed Prior to Finish Floor
- Integral Stops

Core Offering · CEC Compliant · Cal Green Compliant · Meets EPA WaterSenseSM Standards · NSF Lead-Free Certified · ADA Compliant · UltraSeal™ · SecurePfit™

18" Towel Bar

Model	Finish	Case Qty	List Price
BTB-RH1C	Polished Chrome	3	$144
BTB-RH1K	Brushed Nickel	3	$155
BTB-RH1B	Matte Black	3	$169
BTB-RH1BG	Brushed Gold	3	$183

Technical Info

Holes: · 2-Hole

Features:
- Premium Metal Construction
- Superior Mounting Posts
- Concealed Screw Installation
- Mounting Hardware Included

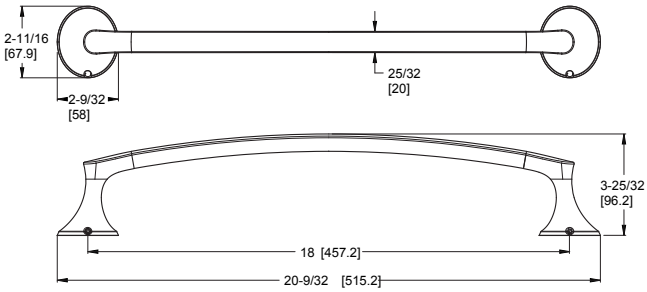

24" Double Towel Bar

BTB-RH2C	Polished Chrome	3	$209
BTB-RH2K	Brushed Nickel	3	$222
BTB-RH2B	Matte Black	3	$235
BTB-RH2BG	Brushed Gold	3	$249

Holes: · 2-Hole

Features:
- Premium Metal Construction
- Superior Mounting Posts
- Concealed Screw Installation
- Mounting Hardware Included

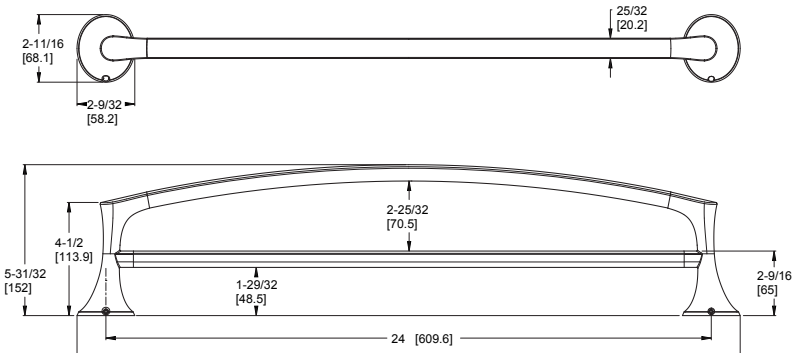

Towel Ring

BRB-RHØC	Polished Chrome	3	$110
BRB-RHØK	Brushed Nickel	3	$122
BRB-RHØB	Matte Black	3	$136
BRB-RHØBG	Brushed Gold	3	$149

Holes: · 1-Hole

Features:
- Premium Metal Construction
- Superior Mounting Posts
- Concealed Screw Installation
- Mounting Hardware Included

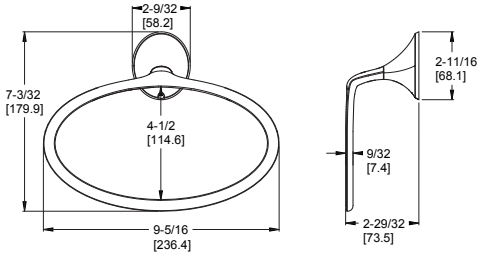

Core Offering · CEC Compliant · Cal Green Compliant · Meets EPA WaterSenseSM Standards · NSF Lead-Free Certified · ADA Compliant · UltraSeal™ · SecurePfit™

Paper Holder

Model	Finish	Case Qty	List Price
BPH-RHØC	Polished Chrome	3	$108
BPH-RHØK	Brushed Nickel	3	$127
BPH-RHØB	Matte Black	3	$142
BPH-RHØBG	Brushed Gold	3	$155

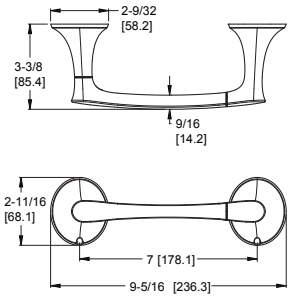

Technical Info

Holes: · 2-Hole

Features:
- Premium Metal Construction
- Pivot Swing Paper Mount
- Concealed Screw Installation
- Mounting Hardware Included

Robe Hook

Model	Finish	Case Qty	List Price
BRH-RHØC	Polished Chrome	3	$74
BRH-RHØK	Brushed Nickel	3	$86
BRH-RHØB	Matte Black	3	$101
BRH-RHØBG	Brushed Gold	3	$113

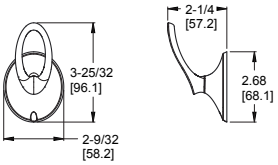

Holes: · 1-Hole

Features:
- Premium Metal Construction
- Superior Mounting Posts
- Concealed Screw Installation
- Mounting Hardware Included

Pfister
Pfister

Tenet

TENET

MODERN LIFESTYLE, DISTILLED INTO A SOPHISTICATED COLLECTION.

If you've taken a look around and decided that excess is just that —clarity of purpose comes shining through. The things you choose to adorn your space become carefully cultivated, and not just arbitrary accumulation. This all-brass modern collection is for the true minimalist who values perfect proportion and extremely precise functionality. Faucet levers and cross handles sit tightly flush, a feat of inner engineering that allows for crisp lines and a tidy footprint. The shower-integrated rail has been thoughtfully designed for ease of installation, complementing a 'just right' 8" rain showerhead. Exactly what you need with nothing that you don't, this collection is premium, through and through. The epitome of simplicity, TENET proves what you already know: every detail counts.

pfisterfaucets.ca 1-800-501-9471

Single Control Lavatory

Model	Finish	Case Qty	List Price
LG42-TNTC	Polished Chrome	3	$448
LG42-TNTK	Brushed Nickel	3	$632
LG42-TNTB	Matte Black	3	$645
LG42-TNTBG	Brushed Gold	3	$656

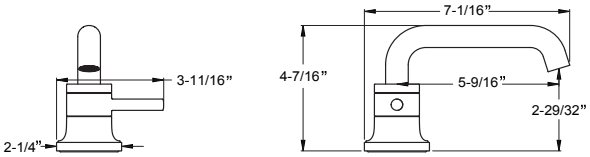

Technical Info

Holes: · 1 or 3-Hole 4" Installation

Features:
- Ceramic Disc Valve
- Metal Lever Handle
- Single Post Mounting Ring
- 3-Hole Deckplate Sold Separately 961-235*
- All Metal Pop-Up
- 1.2 gpm @ 60 psi

Single Control Bathroom Faucet

LG42-TNT2C	Polished Chrome	3	$387
LG42-TNT2K	Brushed Nickel	3	$503
LG42-TNT2B	Matte Black	3	$464
LG42-TNT2BG	Brushed Gold	3	$484

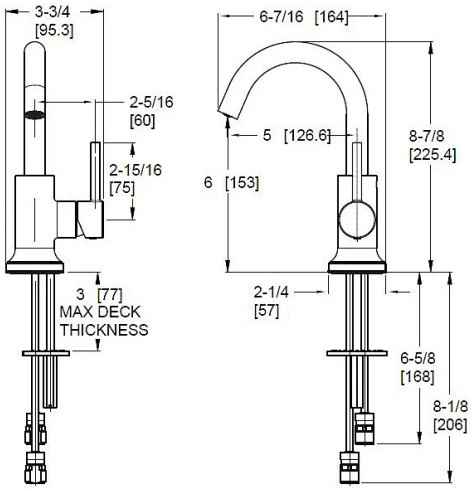

Holes: · 1 or 3-Hole 4" Installation

Features:
- Pforever Seal Ceramic Disc Valve
- Metal Lever Handles
- Pfast Connect™
- 3-Hole Deckplate Sold Separately 961-253*
- 1.2 gpm @ 60 psi

Core Offering | CEC Compliant | Cal Green Compliant | Meets EPA WaterSenseSM Standards | NSF Lead-Free Certified | ADA Compliant | UltraSeal™ | SecurePfit™

8" Widespread Lavatory

Model	Finish	Case Qty	List Price
LG49-TNTC	Polished Chrome	3	$604
LG49-TNTK	Brushed Nickel	3	$860
LG49-TNTB	Matte Black	3	$866
LG49-TNTBG	Brushed Gold	3	$881

Technical Info

Holes: · 3-Hole 8-15" Installation

Features:
- Ceramic Disc Valves
- Metal Lever Handles
- All Metal Pop-Up
- Quick Connect Hose Assembly
- 1.2 gpm @ 60 psi

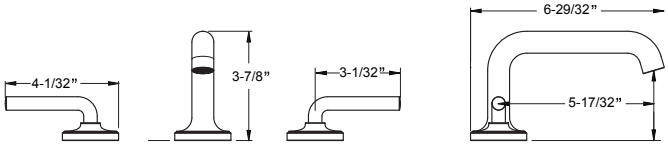

8" Widespread Lavatory

LG49-TNT3C	Polished Chrome	3	$505
LG49-TNT3K	Brushed Nickel	3	$631
LG49-TNT3B	Matte Black	3	$673
LG49-TNT3BG	Brushed Gold	3	$721

Holes: · 3-Hole 8-15" Installation

Features:
- Pforever Seal Ceramic Disc Valve
- All Metal Construction
- All Metal Pop-Up
- Quick Connect Hose Assembly
- 1.2 gpm @ 60 psi

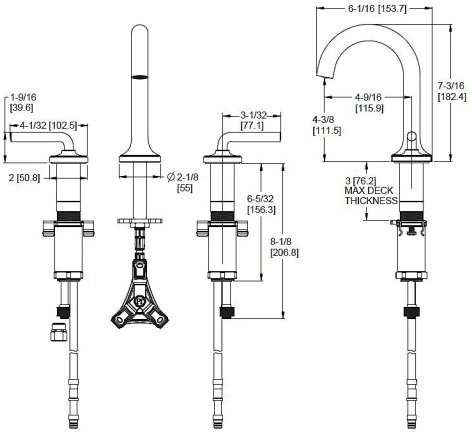

Optional Cross Handle - Widespread

HHL-049TNTC	Polished Chrome	12	$49
HHL-049TNTK	Brushed Nickel	12	$63
HHL-049TNTB	Matte Black	12	$63
HHL-049TNTBG	Brushed Gold	12	$70

Features:
- Easy Install on Tenet Widespread LG49-TNT* and LG49-TNT3*
- Sold as a Pair

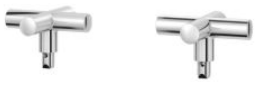

Core Offering · CEC Compliant · Cal Green Compliant · Meets EPA WaterSenseSM Standards · NSF Lead-Free Certified · ADA Compliant · UltraSeal™ · SecurePfit™

8" Wall Mount Lavatory

Model	Finish	Case Qty	List Price
LG49-TNT2C	Polished Chrome	3	$451
LG49-TNT2K	Brushed Nickel	3	$715
LG49-TNT2B	Matte Black	3	$722
LG49-TNT2BG	Brushed Gold	3	$736

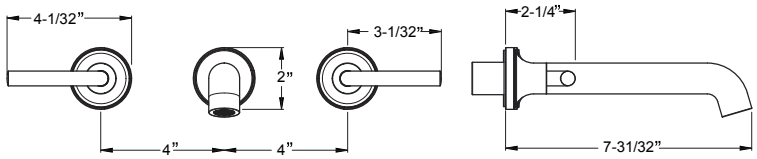

Technical Info

Holes:
- 3-Hole 8-15" Installation

Features:
- Ceramic Disc Valves
- Metal Lever Handles
- Grid Strainer Sold Seperately
- 1.2 gpm @ 60 psi

Must Order Wall Mount Rough In Valve Separately

Universal
Wall Mount Rough Valve

★	LØW8-Ø2ØØ	N/A	3	$287

Holes:
- 3-Hole 8” Installation

Features:
- Ceramic Disc Valves
- 11/16” Installation Depth Adjustability
- 8” Fixed Body
- 1.2 gpm @ 60 psi

Optional Cross Handle - Widespread

HHL-049TNTC	Polished Chrome	12	$49
HHL-049TNTK	Brushed Nickel	12	$63
HHL-049TNTB	Matte Black	12	$63
HHL-049TNTBG	Brushed Gold	12	$70

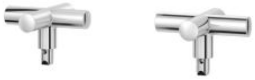

Features:
- Easy Install on Tenet Widespread LG49-TNT2*
- Sold as a Pair

Core Offering | CEC Compliant | Cal Green Compliant | Meets EPA WaterSenseSM Standards | NSF Lead-Free Certified | ADA Compliant | UltraSeal™ | SecurePfit™

Single Hole Free-Standing Tub Filler with Hand Shower

Model	Finish	Case Qty	List Price
LG6-1TNTC	Polished Chrome	1	$2,403
LG6-1TNTK	Brushed Nickel	1	$2.653
LG6-1TNTB	Matte Black	1	$2,836
LG6-1TNTBG	Brushed Gold	1	$3,052

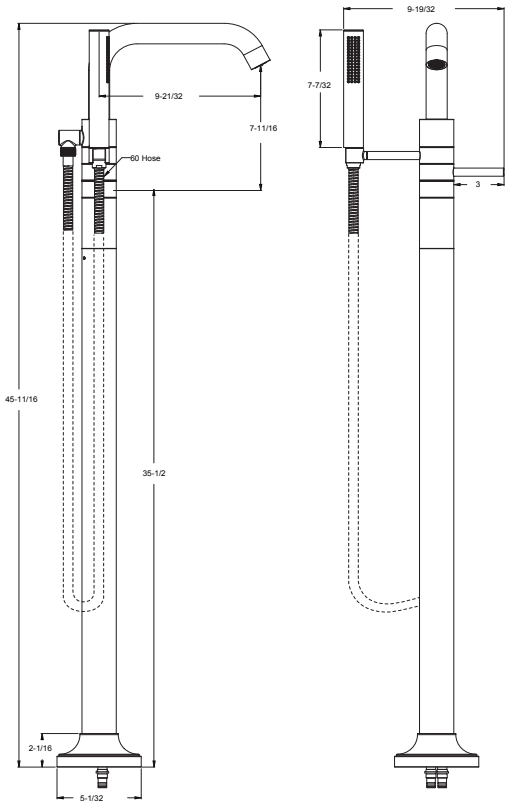

Technical Info

Holes: · 1-Hole Installation

Features:
- Modern Design
- Ceramic Disc Valve
- Metal Lever Handle
- Integrated Handshower Diverter Handle
- Brass Construction
- 6 gpm @ 60 psi
- Hand Shower 1.8 gpm @ 80 psi

Must Order Free-Standing Rough In Valve Separately

Universal
1-Hole Free-Standing Rough-in Valve

ØX627ØR	N/A	3	$321

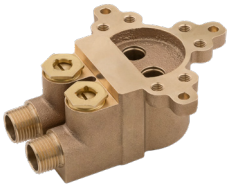

Features:
- All Metal Construction
- Mounting Hardware Included
- All Brass Rough-In Valve Body to be Installed Prior to Finish Floor
- Integral Stops

Core Offering · CEC Compliant · Cal Green Compliant · Meets EPA WaterSenseSM Standards · NSF Lead-Free Certified · ADA Compliant · UltraSeal™ · SecurePfit™

Pressure Balance Tub & Shower Trim

Model	Finish	Case Qty	List Price
LG89-8TNTC	Polished Chrome	3	$590
LG89-8TNTK	Brushed Nickel	3	$660
LG89-8TNTB	Matte Black	3	$799
LG89-8TNTBG	Brushed Gold	3	$833

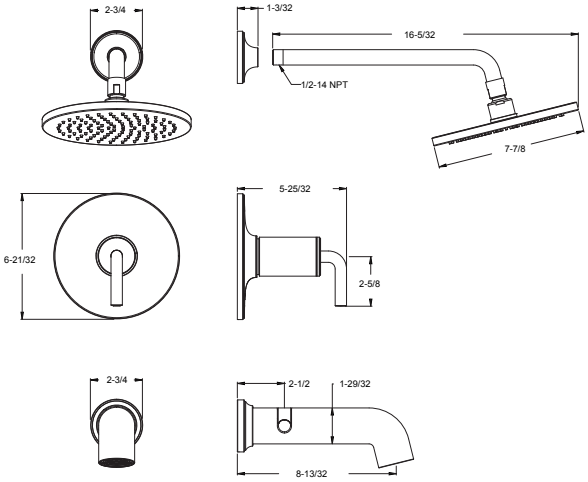

Technical Info

Features:
- SecurePfit™
- Metal Lever Handle
- Hot/Cold Indicator
- All Brass Showerhead
- Easy to Clean Spray Nozzles
- 7" IP & Quick Connect Diverted Tub Spout
- Showerhead 1.8 gpm @ 80 psi

Must Order Pressure Balance Rough in Valve Separately. See Valve Section.

Pressure Balance Tub

LG89-7TNTC	Polished Chrome	3	$454
LG89-7TNTK	Brushed Nickel	3	$555
LG89-7TNTB	Matte Black	3	$625
LG89-7TNTBG	Brushed Gold	3	$660

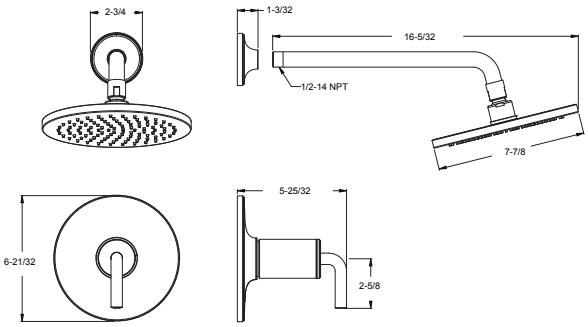

Features:
- SecurePfit™
- Metal Lever Handle
- Hot/Cold Indicator
- All Brass Showerhead
- Easy to Clean Spray Nozzles
- 7" IP & Quick Connect Diverted Tub Spout
- Showerhead 1.8 gpm @ 80 psi

Must Order Pressure Balance Rough in Valve Separately. See Valve Section.

Pressure Balance Valve Only Trim

R89-1TNTC	Polished Chrome	3	$244
R89-1TNTK	Brushed Nickel	3	$312
R89-1TNTB	Matte Black	3	$333
R89-1TNTBG	Brushed Gold	3	$347

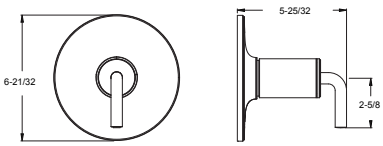

Features:
- SecurePfit™
- Metal Lever Handle
- Hot/Cold Indicator

Must Order Pressure Balance Rough in Valve Separately. See Valve Section.

Core Offering | CEC Compliant | Cal Green Compliant | Meets EPA WaterSenseSM Standards | NSF Lead-Free Certified | ADA Compliant | UltraSeal™ | SecurePfit™

Diverter Trim Only

Model	Finish	Case Qty	List Price
Ø16-TNT1C	Polished Chrome	3	$135
Ø16-TNT1K	Brushed Nickel	3	$187
Ø16-TNT1B	Matte Black	3	$208
Ø16-TNT1BG	Brushed Gold	3	$226

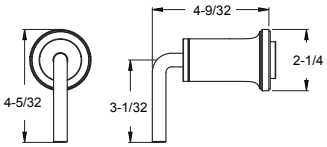

Technical Info

Features:
- SecurePfit™
- Metal Lever Handle and Matching Flange
- Can be Used with Ø15-2WDX for Cal Green Compliant Applications

Must Order Ø15-4WDX or Ø15-2WDX Rough In Valve Separately. See Valve Section.

Core Offering · CEC Compliant · Cal Green Compliant · Meets EPA WaterSenseSM Standards · NSF Lead-Free Certified · ADA Compliant · UltraSeal™ · SecurePfit™

Slide Bar/Hand Shower Kit

Model	Finish	Case Qty	List Price
LG16-3TNTC	Polished Chrome	3	$451
LG16-3TNTK	Brushed Nickel	3	$597
LG16-3TNTB	Matte Black	3	$697
LG16-3TNTBG	Brushed Gold	3	$727

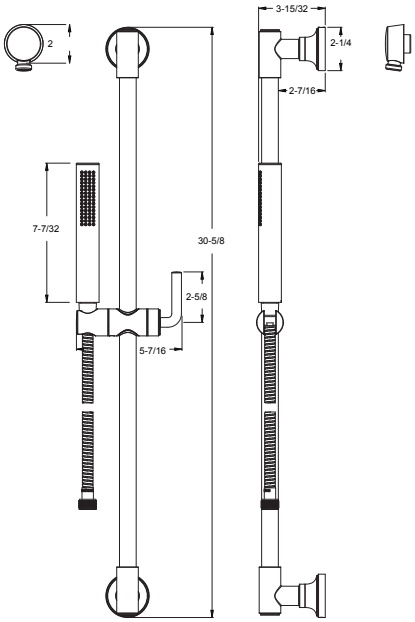

Technical Info

Features:
- Complete Slide Bar Package with Handheld Shower, Hose, Drop Elbow, Slide Bar, and Wall Mount Bracket
- All Metal Slide Bar
- Easy To Clean Spray Nozzles
- 60" Metal Hose with Matching Finish
- Back Flow Prevention
- Works with Tenet Diverter Trim and Valve
- Not to Be Used as a Grab Bar
- Hand Shower 1.8 gpm @ 80 psi

Optional Cross Handle - Slide Bar/Hand Shower Kit

HHL-G16TNTC	Polished Chrome	12	$35
HHL-G16TNTK	Brushed Nickel	12	$49
HHL-G16TNTB	Matte Black	12	$48
HHL-G16TNTBG	Brushed Gold	12	$56

Features:
- Optional Cross Handle for Tenet Slide Bar Kit, LG16-3TNT*
- Easy Install On Slide Bar Kit

Core Offering | CEC Compliant | Cal Green Compliant | Meets EPA WaterSenseSM Standards | NSF Lead-Free Certified | ADA Compliant | UltraSeal™ | SecurePfit™

Shower Integrated Rail

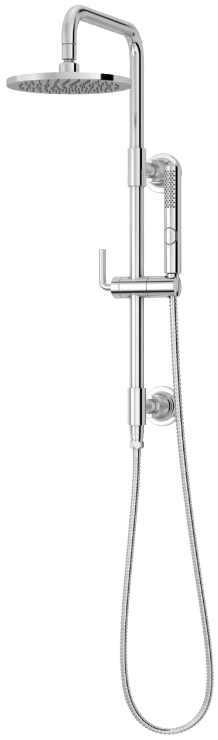

LG16-TNTC	Polished Chrome	3	$694
LG16-TNTK	Brushed Nickel	3	$833
LG16-TNTB	Matte Black	3	$931
LG16-TNTBG	Brushed Gold	3	$971

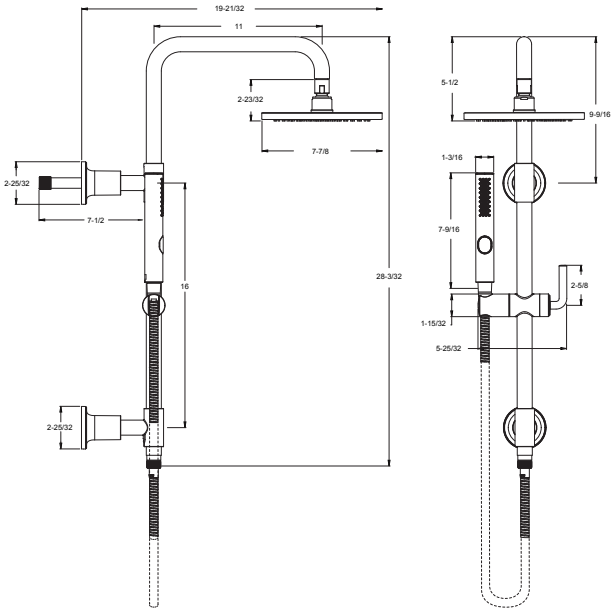

Features:
- Complete Shower Integrated Rail with Handheld
- All Metal Slide Bar
- Easy Installation for Retrofit or New Construction
- Easy to Clean Spray Nozzles
- 60" Metal Hose with Matching Finish
- Back Flow Prevention
- All Brass Showerhead
- Not to Be Used as a Grab Bar
- Includes Typical Installation Hardware
- Hand Shower 1.8 gpm @ 80 psi

Optional Cross Handle - Integrated Rail

HHL-LG16TNTC	Polished Chrome	12	$35
HHL-LG16TNTK	Brushed Nickel	12	$49
HHL-LG16TNTB	Matte Black	12	$48
HHL-LG16TNTBG	Brushed Gold	12	$56

Features:
- Optional Cross Handle
- Easy Install on Slide Bar Kit LG16-TNT*

Core Offering · CEC Compliant · Cal Green Compliant · Meets EPA WaterSenseSM Standards · NSF Lead-Free Certified · ADA Compliant · UltraSeal™ · SecurePfit™

Raincan Showerhead

Model	Finish	Case Qty	List Price
973-264A	Polished Chrome	3	$201
973-264J	Brushed Nickel	3	$223
973-264B	Matte Black	1	$283
973-264BG	Brushed Gold	1	$294

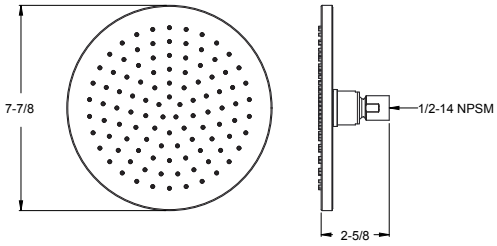

Technical Info

Features:
- Raincan Showerhead
- Easy To Clean Spray Nozzles
- Shower Arm and Flange Sold Separately
- Order 941-Ø55Ø for 1.5 gpm Showerhead Insert
- Showerhead 1.8 gpm @ 80 psi

10 in. Round Showerhead

Model	Finish	Case Qty	List Price
★ LG15-TNT1C	Polished Chrome	3	$250
LG15-TNT1K	Brushed Nickel	3	$280
★ LG15-TNT1B	Matte Black	3	$310
LG15-TNT1BG	Brushed Gold	3	$340

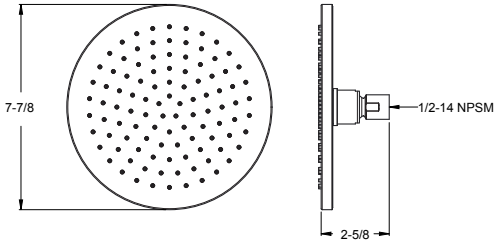

Features:
- All Metal Construction
- Easy To Clean Spray Nozzles
- Shower Arm and Flange Sold Separately

Core Offering · CEC Compliant · Cal Green Compliant · Meets EPA WaterSenseSM Standards · NSF Lead-Free Certified · ADA Compliant · UltraSeal™ · SecurePfit™

18" Towel Bar

Model	Finish	Case Qty	List Price
BTB-1TNTC	Polished Chrome	6	$150
BTB-1TNTK	Brushed Nickel	6	$163
BTB-1TNTB	Matte Black	6	$177
BTB-1TNTBG	Brushed Gold	6	$190

Technical Info

Holes: · 2-Hole Installation

Features:
· Premium Metal Construction
· Superior Mounting Posts
· Concealed Screw Installation
· Mounting Hardware Included

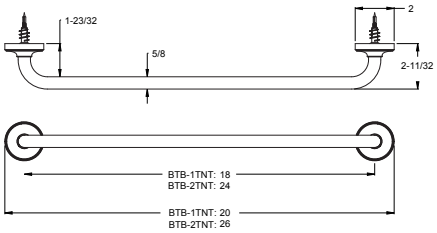

24" Towel Bar

Model	Finish	Case Qty	List Price
BTB-2TNTC	Polished Chrome	6	$215
BTB-2TNTK	Brushed Nickel	6	$229
BTB-2TNTB	Matte Black	6	$243
BTB-2TNTBG	Brushed Gold	6	$256

Holes: · 2-Hole Installation

Features:
· Premium Metal Construction
· Superior Mounting Posts
· Concealed Screw Installation
· Mounting Hardware Included

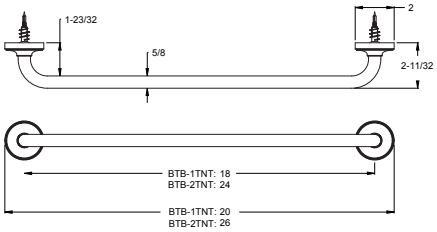

Towel Ring

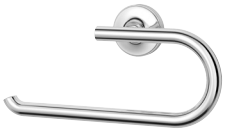

Model	Finish	Case Qty	List Price
BRB-TNTC	Polished Chrome	8	$114
BRB-TNTK	Brushed Nickel	8	$127
BRB-TNTB	Matte Black	8	$142
BRB-TNTBG	Brushed Gold	8	$155

Holes: · 1-Hole Installation

Features:
· Premium Metal Construction
· Superior Mounting Posts
· Concealed Screw Installation
· Mounting Hardware Included

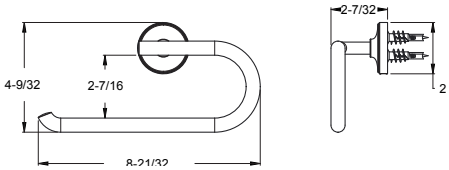

Paper Holder

Model	Finish	Case Qty	List Price
BPH-TNTC	Polished Chrome	8	$111
BPH-TNTK	Brushed Nickel	8	$133
BPH-TNTB	Matte Black	8	$145
BPH-TNTBG	Brushed Gold	8	$159

Technical Info

Holes: · 2-Hole Installation

Features:
· Premium Metal Construction
· Pivot Swing Paper Mount
· Concealed Screw Installation
· Mounting Hardware Included

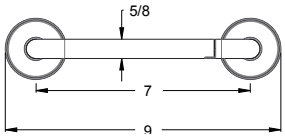

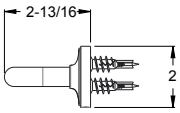

Robe Hook

BRH-TNTC	Polished Chrome	12	$76
BRH-TNTK	Brushed Nickel	12	$89
BRH-TNTB	Matte Black	12	$105
BRH-TNTBG	Brushed Gold	12	$117

Holes: · 1-Hole Installation

Features:
· Premium Metal Construction
· Superior Mounting Posts
· Concealed Screw Installation
· Mounting Hardware Included

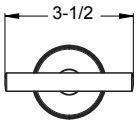

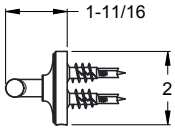

Tisbury

Tisbury is the ultimate classic bath collection. Grace in action, this expansive line of extraordinary fixtures and faucets showcases complementary elements ranging from robe hooks to free-standing tub fillers. Styled with the elegance of golden-era travel, each piece is made of all-brass construction for lasting performance and effortless functionality. The very best of old-world craftsmanship blends with the latest technology to offer you endless customizable combinations.

Single Control Lavatory

Model	Finish	Case Qty	List Price
LG42-TBØC	Polished Chrome	3	$369
LG42-TBØK	Brushed Nickel	3	$499
LG42-TBØD	Polished Nickel	3	$499
LG42-TBØBG	Brushed Gold	3	$537

961-223A	Polished Chrome	1	$22	Deckplates
961-223J	Brushed Nickel	1	$33	
961-223D	Polished Nickel	1	$29	
961-223BG	Brushed Gold	1	$51	

Technical Info

Holes: · 1-Hole Installation

Features:
- Ceramic Disc Valve
- Metal Lever Handle
- Single Post Mounting Ring
- Optional 3-Hole Installation Deck Plate Available, Order 961-223* Separately
- All Metal Pop-Up
- 1.2 gpm @ 60 psi

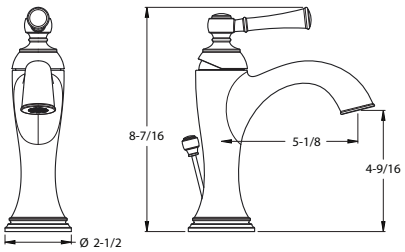

8" Widespread Lavatory

LG49-TBØC	Polished Chrome	3	$508
LG49-TBØK	Brushed Nickel	3	$730
LG49-TBØD	Polished Nickel	3	$730
LG49-TBØBG	Brushed Gold	3	$762

Holes: · 3-Hole 8-15" Installation

Features:
- Ceramic Disc Valves
- Metal Lever Handles
- All Metal Pop-Up
- Quick Connect Hose Assembly
- Order 971-Ø86Ø to Increase Max. Install Depth to 3"
- Optional Cross Handles Available HHL-Ø49TB*
- Both Finished Matched Metal And White Ceramic Hot/Cold Handle Inserts Included
- 1.2 gpm @ 60 psi

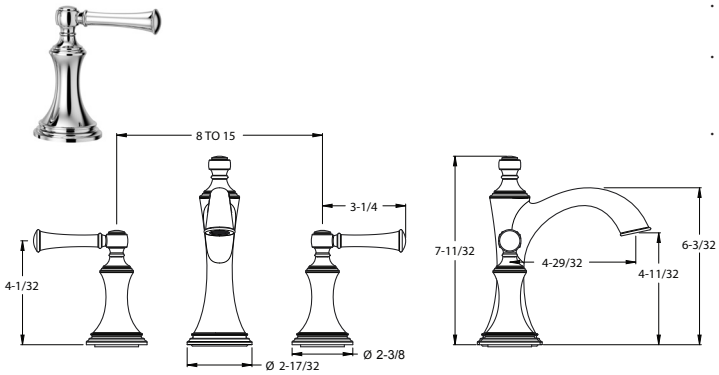

Optional Cross Handle - Widespread

HHL-Ø49TBC	Polished Chrome	3	$45
HHL-Ø49TBK	Brushed Nickel	3	$60
HHL-Ø49TBD	Polished Nickel	3	$60
HHL-Ø49TBBG	Brushed Gold	3	$49

Features:
- Easy Install on Tisbury Widespread LG49TBØ*
- Sold as a Pair

How to Order a Cross Handle Lavatory Faucet

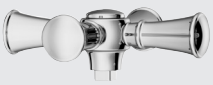

Cross Handle
HHL-Ø49TB*

+

8" Widespread
LG49-TBØ*

=

Complete Faucet

CEC Compliant · Cal Green Compliant · Meets EPA WaterSense℠ Standards · NSF Lead-Free Certified · ADA Compliant · UltraSeal™ · SecurePfit™

Deck Mount Tub Filler with Hand Shower

Model	Finish	Case Qty	List Price
LG6-2TBC	Polished Chrome	1	$1,156
LG6-2TBK	Brushed Nickel	1	$1,431
LG6-2TBD	Polished Nickel	1	$1,431
LG6-2TBBG	Brushed Gold	1	$1,484

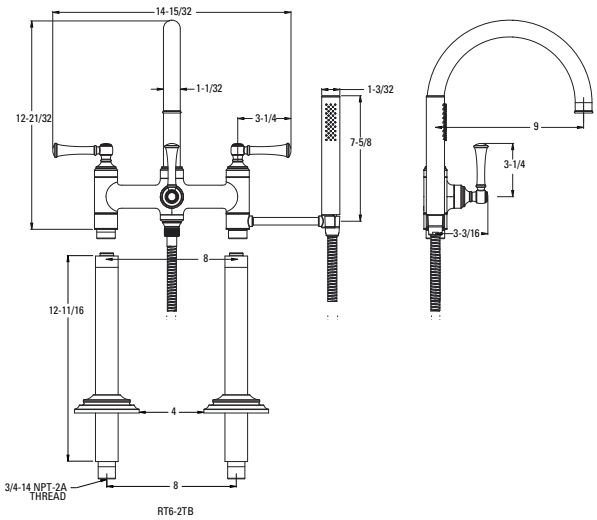

Technical Info

Holes:
- 2-Hole Installation

Features:
- Traditional Double Riser Tub Filler
- Ceramic Disc Valves
- Metal Lever Handles
- Brass Construction
- Includes Deck Mount Installation Adaptors
- Optional Cross Handles Available HHL-LG6TB*
- Both Finished Matched Metal and White Ceramic Hot/Cold/
- Diverter Inserts Included
- 10 gpm @ 60 psi
- Hand Shower 1.8 gpm @ 80 psi

Can be used with optional rough in valve ØX6-34ØR

Pressure Balance Tub & Shower Trim

Model	Finish	Case Qty	List Price
LG89-8TBC	Polished Chrome	3	$453
LG89-8TBK	Brushed Nickel	3	$589
LG89-8TBD	Polished Nickel	3	$589
LG89-8TBBG	Brushed Gold	3	$674

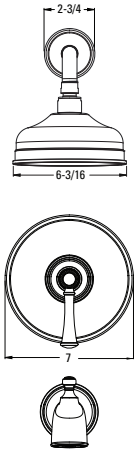

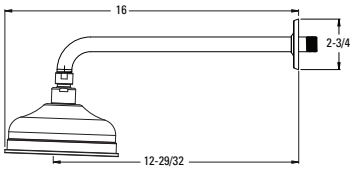

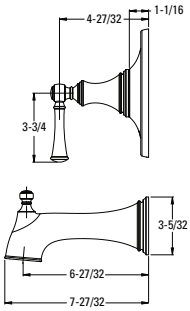

Features:
- SecurePfit™
- Metal Lever Handle
- Hot/Cold Indicator
- All Brass Showerhead
- Easy to Clean Spray Nozzles
- 7" IP & Quick Connect Diverter Tub Spout
- Optional Cross Handle HHL-Ø89TB*
- Both Finished Matched Metal and Ceramic Caps Included
- Showerhead 1.8 gpm @ 80 psi

OX8-340A
OX8-310A

Pressure Balance Shower Trim

LG89-7TBC	Polished Chrome	3	$412
LG89-7TBK	Brushed Nickel	3	$512
LG89-7TBD	Polished Nickel	3	$512
LG89-7TBBG	Brushed Gold	3	$604

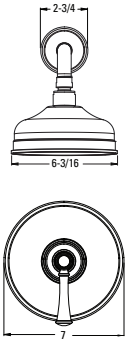

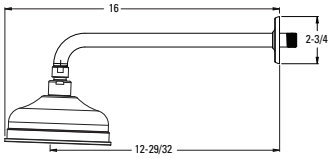

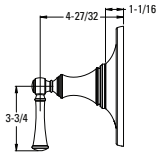

Features:
- SecurePfit™
- Metal Lever Handle
- Hot/Cold Indicator
- All Brass Showerhead
- Easy to Clean Spray Nozzles
- Optional Cross Handle HHL-Ø89TB*
- Both Finished Matched Metal and Ceramic Caps Included
- Showerhead 1.8 gpm @ 80 psi

Pressure Balance Valve Only Trim

R89-1TBC	Polished Chrome	3	$211
R89-1TBK	Brushed Nickel	3	$286
R89-1TBD	Polished Nickel	3	$289
R89-1TBBG	Brushed Gold	3	$346

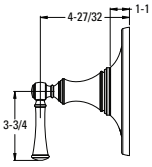

Features:
- Metal Lever Handle
- SecurePfit
- Hot/Cold Indicator
- Optional Cross Handle HHL-Ø89TB*
- Both Finished Matched Metal and Ceramic Caps Included

CEC Compliant | Cal Green Compliant | Meets EPA WaterSense℠ Standards | NSF Lead-Free Certified | ADA Compliant | UltraSeal™ | SecurePfit™

	Model	Finish	Case Qty	List Price
Pressure Balance Optional Cross Handle - Tub & Shower	HHL-Ø89TBC	Polished Chrome	3	$29
	HHL-Ø89TBK	Brushed Nickel	3	$41
	HHL-Ø89TBD	Polished Nickel	3	$42
	HHL-Ø89TBBG	Brushed Gold	3	$49

Technical Info

Features:
- Optional Cross Handle
- Easy Install on Tub & Shower Trim, LG89-8TB*, LG89-7TB* and R89-1TB*

How to Order a Cross Handle Shower Trim

Cross Handle
HHL-Ø89TB*

+

Valve Trim
LG89-8TB*
LG89-7TB*
R89-1TB*

=

Complete Pressure Balance Shower Trim

Diverter Trim Only	Ø16-TB1C	Polished Chrome	3	$139
	Ø16-TB1K	Brushed Nickel	3	$185
	Ø16-TB1D	Polished Nickel	3	$185
	Ø16-TB1BG	Brushed Gold	3	$242

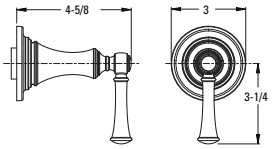

Features:
- SecurePfit™
- Metal Lever Handle and Matching Flange
- Optional Cross Handle HHL-Ø16TB*
- Both Finished Matched Metal and Ceramic Caps Included

Must order Ø15-3WDNS (Non-Shared, Cal Green Compliant) or Ø15-6WDS (Shared) Rough-In Valve Separately. See Valve Section.

Optional Cross Handle - Diverter Trim	HHL-Ø16TBC	Polished Chrome	3	$29
	HHL-Ø16TBK	Brushed Nickel	3	$41
	HHL-Ø16TBD	Polished Nickel	3	$42
	HHL-Ø16TBBG	Brushed Gold	3	$49

Features:
- Optional Cross Handle
- Easy Install on Diverter Handle, Ø16-TB1*

How to Order a Cross Handle Diverter Trim

Cross Handle
HHL-Ø16TB*

+

Diverter Trim
Ø16-TB1*

=

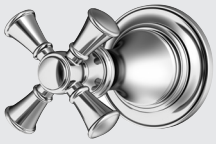

Complete Diverter Trim

CEC Compliant | Cal Green Compliant | Meets EPA WaterSense℠ Standards | NSF Lead-Free Certified | ADA Compliant | UltraSeal™ | SecurePfit™

Slide Bar/Hand Shower Kit

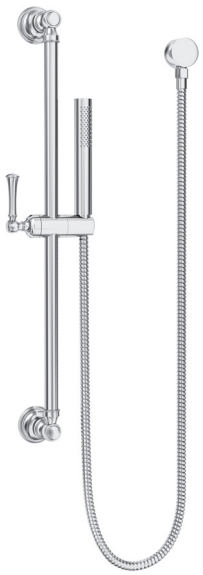

Model	Finish	Case Qty	List Price
LG16-3TBC	Polished Chrome	3	$384
LG16-3TBK	Brushed Nickel	3	$548
LG16-3TBD	Polished Nickel	3	$548
LG16-3TBBG	Brushed Gold	3	$643

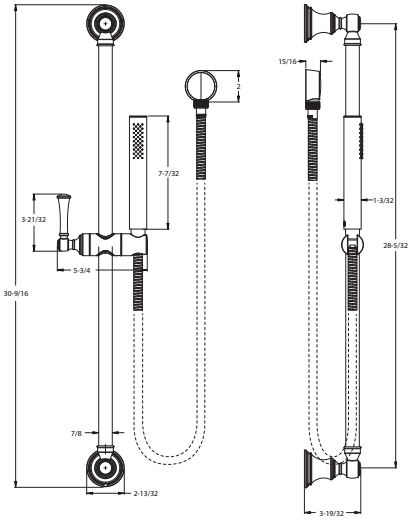

Technical Info

Features:
- Complete Slide Bar Package with Handheld Shower, Hose, Drop Elbow, Slide Bar, and Wall Mount Bracket
- All Metal Slide Bar
- Optional Cross Handle HHL-G16TB*
- Easy To Clean Spray Nozzles
- 60" Metal Hose with Matching Finish
- Backflow Prevention
- Works with Tisbury Diverter Trim and Valve
- Both Finished Matched Metal and White Ceramic Inserts Included
- Not to Be Used as a Grab Bar
- Hand Shower 1.8 gpm @ 80 psi

Slide Bar Kit Cross Handles

HHL-G16TBC	Polished Chrome	3	$29
HHL-G16TBK	Brushed Nickel	3	$41
HHL-G16TBD	Polished Nickel	3	$42
HHL-G16TBBG	Brushed Gold	3	$49

Features:
- Optional Cross Handle for Tisbury Slide Bar Kit, LG16-3TB*
- Easy Install On Slide Bar Kit

How to Order a Cross Handle Slide Bar Kit

Cross Handle
HHL-G16TB*

+

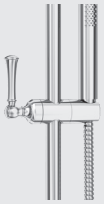

Slide Bar Kit
LG16-3TB*

=

Complete Slide Bar Kit

CEC Compliant | Cal Green Compliant | Meets EPA WaterSense℠ Standards | NSF Lead-Free Certified | ADA Compliant | UltraSeal™ | SecurePfit™

Straight Shower Arm

	Model	Finish	Case Qty	List Price
★	973-1Ø3A	Polished Chrome	1	$59
★	973-1Ø3J	Brushed Nickel	1	$71
★	973-1Ø3Y	Tuscan Bronze	1	$87
	973-1Ø3D	Polished Nickel	1	$121
★	973-1Ø3B	Matte Black	1	$130
	973-1Ø3BG	Brushed Gold	1	$159

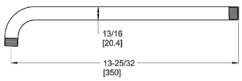

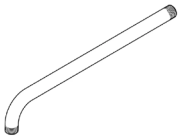

Technical Info

Features:
- All Metal
- Matches Tisbury Style & Finishes

Curved Shower Arm

	Model	Finish	Case Qty	List Price
★	973-Ø3ØA	Polished Chrome	1	$17
★	973-Ø3ØJ	Brushed Nickel	1	$40
	973-Ø3ØY	Tuscan Bronze	1	$27
	973-Ø3ØD	Polished Nickel	1	$25
★	973-Ø3ØB	Matte Black	1	$23
	973-Ø3ØBG	Brushed Gold	1	$34

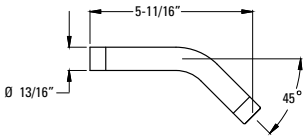

Features:
- Brass Shower Arm
- 1/2" NPT Male Connections

Shower Arm Flange

96Ø-329A	Polished Chrome	24	$8
96Ø-329J	Brushed Nickel	24	$13
96Ø-329D	Polished Nickel	24	$10
96Ø-329Y	Tuscan Bronze	24	$14
96Ø-329BG	Brushed Gold	24	$22

Features:
- 1/2" Shower Arm Flange
- All Metal Construction

1-Function Raincan Showerhead

LG15-TBØC	Polished Chrome	1	$118
LG15-TBØK	Brushed Nickel	1	$147
LG15-TBØD	Polished Nickel	1	$147
LG15-TBØY	Tuscan Bronze	1	$160
LG15-TBØBG	Brushed Gold	1	$161

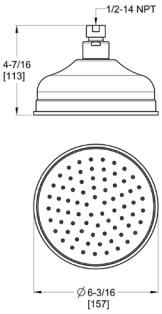

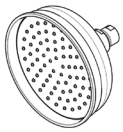

Features:
- Rain spray provides more coverage and a soft, even flow for a relaxing shower experience
- Does not include shower arm, must purchase separately

CEC Compliant | Cal Green Compliant | Meets EPA WaterSense℠ Standards | NSF Lead-Free Certified | ADA Compliant | UltraSeal™ | SecurePfit™

24” Towel Rack

Model	Finish	Case Qty	List Price
BTR-TB2C	Polished Chrome	3	$492
BTR-TB2K	Brushed Nickel	3	$566
BTR-TB2D	Polished Nickel	3	$566
BTR-TB2BG	Brushed Gold	3	$598

Technical Info

Holes: · 4-Hole Installation

Features:
- Premium Metal Construction
- Superior Mounting Posts
- Concealed Screw Installation
- Mounting Hardware Included
- 2 Hanging Hooks Included
- 75lb. Max. Load

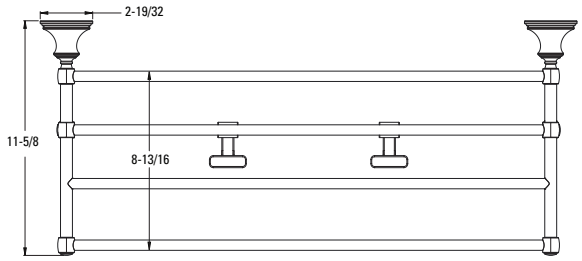

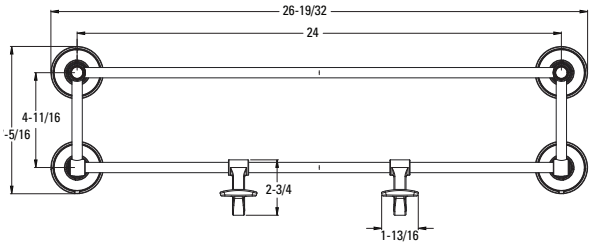

18” Towel Bar

BTB-TB1C	Polished Chrome	3	$127
BTB-TB1K	Brushed Nickel	3	$145
BTB-TB1D	Polished Nickel	3	$144
BTB-TB1BG	Brushed Gold	3	$150

Holes: · 2-Hole Installation

Features:
- Premium Metal Construction
- Superior Mounting Posts
- Concealed Screw Installation
- Mounting Hardware Included

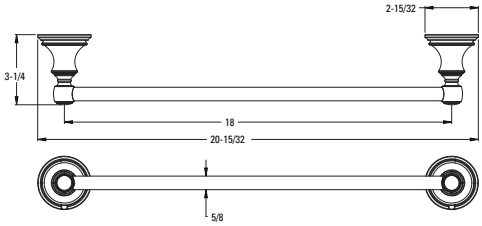

24” Double Towel Bar

BTB-TB2C	Polished Chrome	3	$149
BTB-TB2K	Brushed Nickel	3	$167
BTB-TB2D	Polished Nickel	3	$167
BTB-TB2BG	Brushed Gold	3	$189

Holes: · 2-Hole Installation

Features:
- Premium Metal Construction
- Superior Mounting Posts
- Concealed Screw Installation
- Mounting Hardware Included

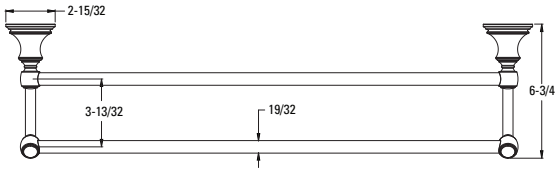

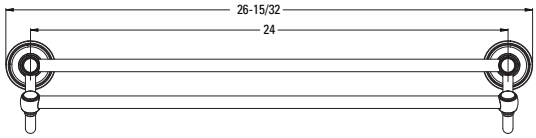

Towel Ring

Model	Finish	Case Qty	List Price
BRB-TBØC	Polished Chrome	3	$98
BRB-TBØK	Brushed Nickel	3	$112
BRB-TBØD	Polished Nickel	3	$111
BRB-TBØBG	Brushed Gold	3	$135

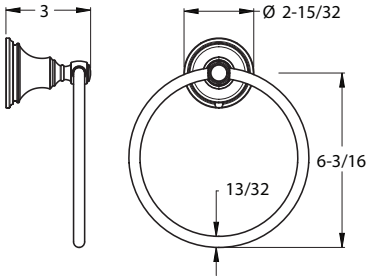

Technical Info

Holes: · 1-Hole Installation

Features:
· Premium Metal Construction
· Superior Mounting Posts
· Concealed Screw Installation
· Mounting Hardware Included

Paper Holder

Model	Finish	Case Qty	List Price
BPH-TBØC	Polished Chrome	3	$98
BPH-TBØK	Brushed Nickel	3	$136
BPH-TBØD	Polished Nickel	3	$135
BPH-TBØBG	Brushed Gold	3	$149

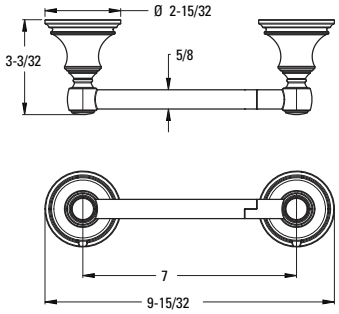

Holes: · 2-Hole Installation

Features:
· Premium Metal Construction
· Pivot Swing Paper Mount
· Concealed Screw Installation
· Mounting Hardware Included

Robe Hook

Model	Finish	Case Qty	List Price
BRH-TBØC	Polished Chrome	3	$49
BRH-TBØK	Brushed Nickel	3	$57
BRH-TBØD	Polished Nickel	3	$57
BRH-TBØBG	Brushed Gold	3	$68

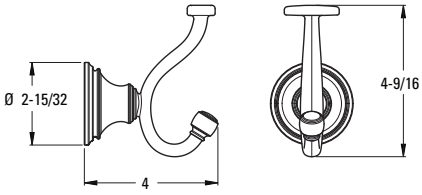

Holes: · 1-Hole Installation

Features:
· Premium Metal Construction
· Superior Mounting Posts
· Concealed Screw Installation
· Mounting Hardware Included

Weller

The Weller line of lavatory fixtures is the new standard for transitional style. With a blend of the best features from both modern and traditional elements, Weller is a complete line of faucets that is refined and well balanced. Gracefully arced spouts and angled handles work together to complement a wide range of décor, making Weller the ideal selection for those who want to update or upgrade their bathroom.

Single Control Lavatory

	Model	Finish	Case Qty	List Price
★	LG42-WRØC	Polished Chrome	3	$196
	LG42-WRØK	Brushed Nickel	3	$230
	LG42-WRØY	Tuscan Bronze	3	$264
★	LG42-WRØB	Matte Black	3	$272

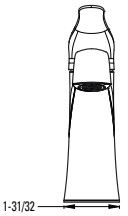

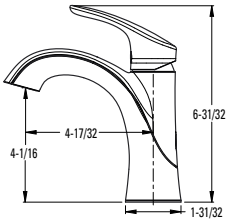

Technical Info

Holes: · 1-Hole Installation

Features:
- Ceramic Disc Valve
- Metal Lever Handle
- High Arc Fixed Spout
- High Temperature Limit Stop
- Optional 3-Hole Installation Deck Plate Available, Must Order Both 961-265* and 974-446* Separately
- Push & Seal Drain Included
- Order 972-097* For Optional Metal Drain
- Drilled for Pop Up
- 1.2 gpm @ 60 psi

	Model	Finish	Case Qty	List Price	
★	961-265A	Polished Chrome	1	$23	Deckplates
	961-265J	Brushed Nickel	1	$32	
	961-265Y	Tuscan Bronze	1	$35	
★	961-265B	Matte Black	1	$39	

4" Centerset Lavatory

★	LG48-WRPC	Polished Chrome	3	$185
	LG48-WRPK	Brushed Nickel	3	$215
	LG48-WRPY	Tuscan Bronze	3	$259
★	LG48-WRPB	Matte Black	3	$250

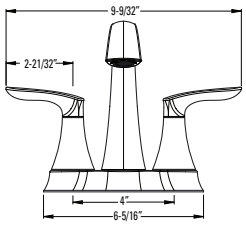

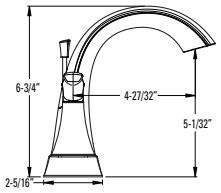

Holes: · 3-Hole 4" Installation

Features:
- Washerless Cartridge
- Metal Lever Handles
- High Arc Fixed Spout
- Push & Seal Drain included
- Washerless Cartridge
- 1.2 gpm @ 60 psi

8" Widespread Lavatory

LG49-WRØC	Polished Chrome	3	$278
LG49-WRØK	Brushed Nickel	3	$334
LG49-WRØY	Tuscan Bronze	3	$369
LG49-WRØB	Matte Black	3	$421

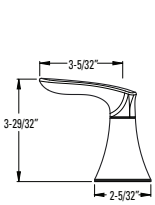

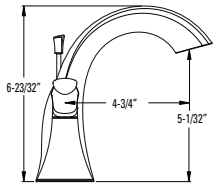

Holes: · 3-Hole 8-15" Installation

Features:
- Ceramic Disc Valves
- Metal Lever Handles
- High Arc Fixed Spout
- Quick Connect Hose Assembly
- Push & Seal Drain included
- Order 971-Ø26Ø to Increase Max. Install Depth to 3"
- 1.2 gpm @ 60 psi

Core Offering · CEC Compliant · Cal Green Compliant · Meets EPA WaterSenseSM Standards · NSF Lead-Free Certified · ADA Compliant · UltraSeal™ · SecurePfit™

3-Hole Roman Tub Trim

	Model	Finish	Case Qty	List Price
★	RT6-5WRC	Polished Chrome	3	$271
	RT6-5WRK	Brushed Nickel	3	$328
	RT6-5WRY	Tuscan Bronze	3	$364
★	RT6-5WRB	Matte Black	3	$367

Technical Info

Holes: · 3-Hole

Features:
· Ceramic Disc Valves
· Metal Lever Handles
· High Arc Fixed Spout

Must Order ØX6-Ø5ØR or ØX6-15ØR Rough In Valve Separately. See Valve Section.

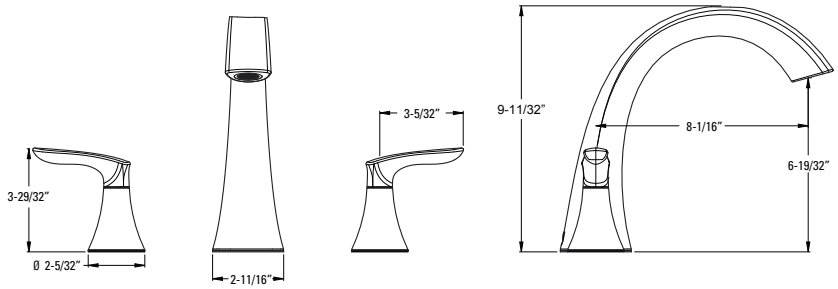

Core Offering · CEC Compliant · Cal Green Compliant · Meets EPA WaterSenseSM Standards · NSF Lead-Free Certified · ADA Compliant · UltraSeal™ · SecurePfit™

Pressure Balance Tub & Shower Trim

	Model	Finish	Case Qty	List Price
★	LG89-8WRC	Polished Chrome	3	$139
	LG89-8WRK	Brushed Nickel	3	$207
	LG89-8WRY	Tuscan Bronze	3	$264
★	LG89-8WRB	Matte Black	3	$270

Technical Info

Features:
- Quick Trim™ Wall Flange
- Metal Lever Handle
- Hot/Cold Indicator
- Easy To Clean Spray Nozzles
- IP & Quick Connect Diverted Tub Spout
- Order 941-Ø55 for 1.5 gpm Showerhead Insert
- Showerhead 1.8 gpm @ 80 psi

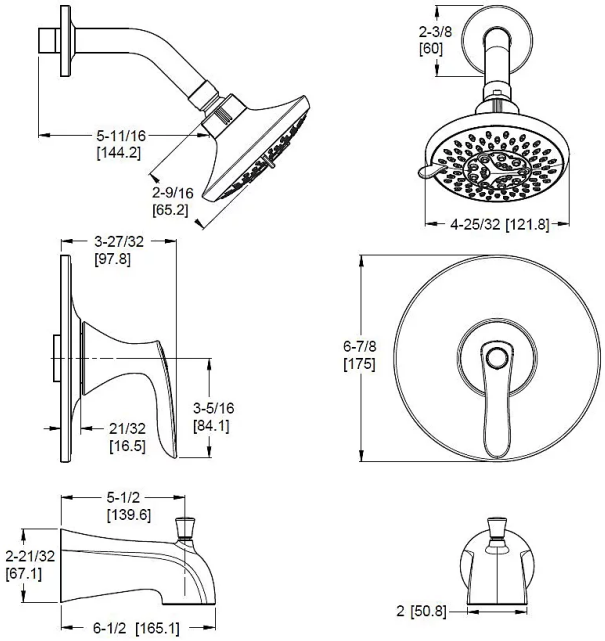

Pressure Balance Shower Trim

	Model	Finish	Case Qty	List Price
★	LG89-7WRC	Polished Chrome	3	$104
	LG89-7WRK	Brushed Nickel	3	$161
	LG89-7WRY	Tuscan Bronze	3	$219
★	LG89-7WRB	Matte Black	3	$223

Features:
- Quick Trim™ Wall Flange
- Metal Lever Handle
- Hot/Cold Indicator
- Easy To Clean Spray Nozzles
- Order 941-Ø55 for 1.5 gpm Showerhead Insert
- Showerhead 1.8 gpm @ 80 psi

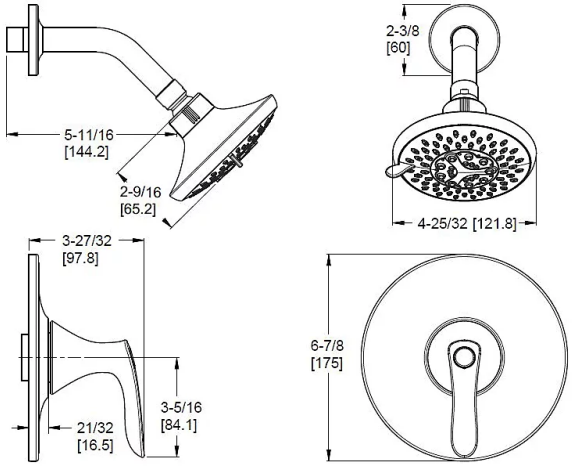

Core Offering · CEC Compliant · Cal Green Compliant · Meets EPA WaterSenseSM Standards · NSF Lead-Free Certified · ADA Compliant · UltraSeal™ · SecurePfit™

Pressure Balance Valve Only Trim

	Model	Finish	Case Qty	List Price
★	R89-1WRC	Polished Chrome	3	$69
	R89-1WRK	Brushed Nickel	3	$103
	R89-1WRY	Tuscan Bronze	3	$138
★	R89-1WRB	Matte Black	3	$144

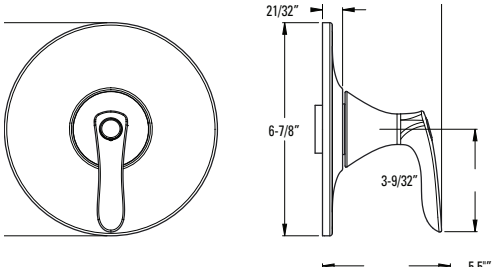

Technical Info

Features:
- Quick Trim™ Wall Flange
- Metal Lever Handle
- Hot/Cold Indicator

Extension Kits

The devil is in the details. We understand that every installation scenario varies from the next. That's why our engineers think of solutions that will make your specific installation a breeze. You're welcome.

Available As Parts	Description	Handle Compatability	Finish	Part No.	List Price
Ø8 Secure Pfit Ext. Kit	For ØX8 Secure Pfit Trims	For Use with ØX8 Requires 1 Kit per Valve Body	Unfinished	97Ø-Ø83Ø	$51
Ø15 Series Ext. Kit	Ø15-XWDX Ext. Kit	For Use with 016 Diverter Trims	Unfinished	97Ø-Ø89Ø	$87
	Both Ø15-3WDNS and Ø15-6WDS	For Use with 016 Diverter Trims	Unfinished	951-3549	$37
	Ø15-3WDNSS and Ø15-6WDSS	For Use with 016 Stacked Diverter Trims	Unfinished	951-3649	$147
Ø8 & Ø9 Series 1" Ext. Kit	For Single Control Valve Bodies, Pressure Balanced and Mixing, Utilizing Quick Trim System.	For Use with Round Acrylic, Loop, Round Crystal, Cross, Deco Lever and Genesis Lever Handles. Requires One Kit per Valve Body. **Does Not Work with SecurePfit Trims**	Polished Chrome	91Ø-563A	$26
			Brushed Nickel	91Ø-563K	$34
			Tuscan Bronze	91Ø-563Y	$34
			Matte Black	91Ø-563B	$60
Ø1 Series 1" Ext. Kit	For Three-Handle Mixing Valve Bodies Utilizing Ceramic Disc Valves Includes Stem Extensions, Sleeve Extensions and Screw Adapters.	For Use with Acrylic Windsor, Metal Verve, Round Acrylic, Deco Lever, French Lever and Cross Handles. Requires One Kit per Valve Body.	Unfinished	91Ø-ØØ5Ø	$72.36
	For Two or Three-Handle Mixing Valve Bodies Utilizing Compression Valves. Includes Stem Extensions, Sleeve Extensions and Screw Adapters.	For Use with Acrylic Windsor, Metal Verve, Round Acrylic, Deco Lever, French Lever and Cross Handles. Requires One Kit per Handle.	Unfinished	91Ø-862Ø	$26
		For Use with Classic Windsor and Classic Verve Handles. Requires One Kit per Handle.	Unfinished	91Ø-561Ø	$29
Ø3, Ø5 & Ø7 Series 1" Ext. Kit	For Two-Handle Mixing Valve Bodies Utilizing Ceramic Disc Valves. Includes Stem Extensions, Sleeve Extensions, Screw Adapters.	For Use with Acrylic Windsor, Metal Verve, Round Acrylic, Deco Lever, French Lever and Cross Handles. Requires One Kit per Valve Body.	Unfinished	91Ø-ØØ7Ø	$49.68
	For Two or Three-Handle Mixing Valve Bodies Utilizing Compression Valves. Includes Stem Extensions, Sleeve Extensions and Screw Adapters.	For Use with Acrylic Windsor, Metal Verve, Round Acrylic, Deco Lever, French Lever and Cross Handles. Requires One Kit per Handle.	Unfinished	91Ø-862Ø	$26
	For Two or Three-Handle Mixing Valve Bodies Utilizing Compression Valves. Includes Stem Extensions, Sleeve Extensions and Screw Adapters.	For Use with Classic Windsor and Classic Verve Handles. Requires One Kit per Handle.	Unfinished	91Ø-561Ø	$29
LG6 Tub Filler 4" Ext. Kit	Traditional Tub Filler 4" Ext. Kit	For Use with LG6-1TF* Tub Filler	Polished Chrome	91Ø-Ø62A	$188
			Polished Nickel	91Ø-Ø62D	$222
			Brushed Nickel	91Ø-Ø62J	$222
			Tuscan Bronze	91Ø-Ø62Y	$251

Showerheads, Handhelds, and Components

Your showerhead does more than deliver water. It also delivers a lot of style. Pfister showerheads are thoughtfully designed with the function you want in a range of styles and finishes to complement your bathroom.

Brislin™ Raincan Showerhead

	Model	Finish	Case Qty	List Price
★	LJ15-BIØC	Polished Chrome	1	$38
	LJ15-BIØK	Brushed Nickel	1	$53
★	LJ15-BIØB	Matte Black	1	$73

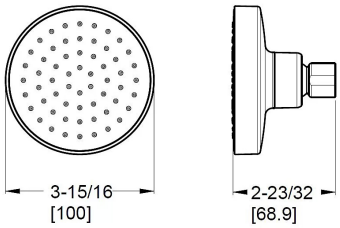

Technical Info

Features:
- Raincan Showerhead
- Easy To Clean Spray Nozzles
- Showerhead 1.75 gpm @ 80 psi

Contempra™ Raincan Showerhead

	Model	Finish	Case Qty	List Price
★	973-312A	Polished Chrome	1	$95
	973-312J	Brushed Ni		
★	973-312B	Matte Black		
	973-312BG	Brushed Go		

KenzoMC Pomme de douche à effet de pluie

	Model	Finish	Case Qty	List Price
	973-228A	Chrome poli	1	108$
	973-228J	Nickel brossé	1	139$
	973-228B	Noir mat	1	195$

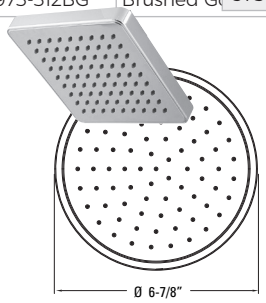

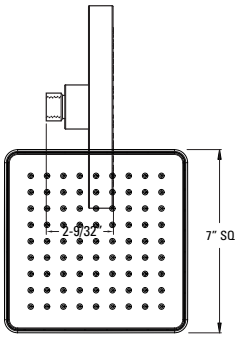

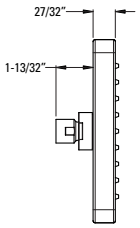

Features:
- Raincan Showerhead
- Easy To Clean Spray Nozzles
- Brass Ball Joint
- Order 941-Ø55Ø for 1.5 gpm Showerhead Insert
- Showerhead 1.8 gpm @ 80 psi

Caractéristiques :
- Pomme de douche à ef
- Picots d'arrosage faciles
- Bras de douche et colle vendus séparément
- Commander 941-Ø55Ø pomme de douche de 1
- Pomme de douche 1,8 g 80 psi

Deckard™ Showerhead

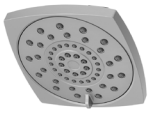

	Model	Finish	Case Qty	List Price
★	973-314A	Polished Chrome	1	$42
★	973-314J	Brushed Nickel	1	$58
★	973-314B	Matte Black	1	$78

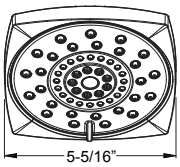

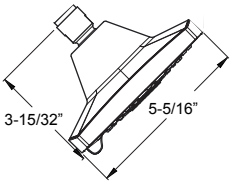

Features:
- Three-Function Showerhead
- 3 Functions:
  - Penetrating Massage
  - Rain Spray
  - Invigorating Spray
- Easy To Clean Spray Nozzles
- Order 941-Ø55 for 1.5 gpm Showerhead Insert
- Showerhead 1.8 gpm @ 80 psi

Core Offering · CEC Compliant · Cal Green Compliant · Meets EPA WaterSenseSM Standards · NSF Lead-Free Certified · ADA Compliant · UltraSeal™ · SecurePfit™

	Model	Finish	Case Qty	List Price
Kenzo™ Raincan Showerhead	973-228A	Polished Chrome	1	$108
	973-228J	Brushed Nickel	1	$139
	973-228B	Matte Black	1	$195

Technical Info

Features:
- Raincan Showerhead
- Easy To Clean Spray Nozzles
- Shower Arm and Flange Sold Separately
- Order 941-Ø55Ø for 1.5 gpm Showerhead Insert
- Showerhead 1.8 gpm @ 80 psi

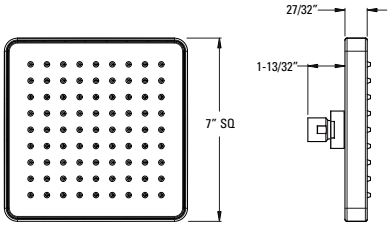

fet de pluie
à nettoyer
rette

pour insert
,5 gpm
gpm @

	Model	Finish	Case Qty	List Price
Pfirst Modern™ Showerhead	★ LJ15-Ø7ØC	Polished Chrome	1	$32
	LJ15-Ø7ØK	Brushed Nickel	1	$44
	★ LJ15-Ø7ØB	Matte Black	1	$84

Features:
- Multi Function
- JX = Job Pack Quantity Ships in Master Carton of 12
- Showerhead 1.8 gpm @ 80 psi

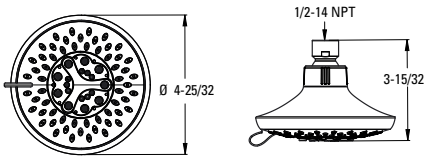

	Model	Finish	Case Qty	List Price
Rhen™ Showerhead	★ 973-264A	Polished Chrome	1	$201
	973-264J	Brushed Nickel	1	$223
	★ 973-264B	Matte Black	1	$283
	973-264BG	Brushed Gold	1	$294

Features:
- Raincan Showerhead
- Easy To Clean Spray Nozzles
- Brass Ball Joint
- Shower Arm and Flange Sold Separately
- Order 941-Ø55Ø for 1.5 gpm Showerhead Insert
- Showerhead 1.8 gpm @ 80 psi

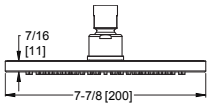

Core Offering | CEC Compliant | Cal Green Compliant | Meets EPA WaterSenseSM Standards | NSF Lead-Free Certified | ADA Compliant | UltraSeal™ | SecurePfit™

Tenet™
10 in. Round Showerhead

Model	Finish	Case Qty	List Price
★ LG15-TNT1C	Polished Chrome	3	$250
LG15-TNT1K	Brushed Nickel	3	$280
★ LG15-TNT1B	Matte Black	3	$310
LG15-TNT1BG	Brushed Gold	3	$340

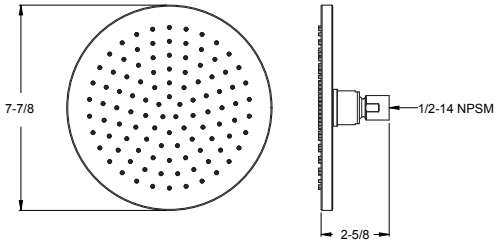

Technical Info

Features:
- All Metal Construction
- Easy To Clean Spray Nozzles
- Shower Arm and Flange Sold Separately

Verve
10 in. Square Showerhead, Arm and Flange

Model	Finish	Case Qty	List Price
★ LG15-MDS1C	Polished Chrome	3	$201
★ LG15-MDS1B	Matte Black	3	$223
LG15-TNT1BG	Brushed Gold	3	$491

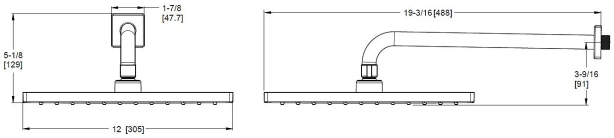

Features:
- All Metal Construction
- Easy To Clean Spray Nozzles
- Shower Arm and Flange Sold Separately

Kelen
Raincan Showerhead

Model	Finish	Case Qty	List Price
★ LG15-ØMFØK	Brushed Nickel	3	$127

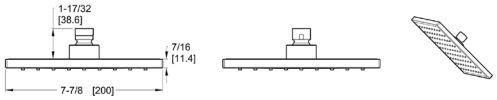

Features:
- All Metal Construction
- Easy To Clean Spray Nozzles
- Shower Arm and Flange Sold Separately

Showers

Core Offering | CEC Compliant | Cal Green Compliant | Meets EPA WaterSenseSM Standards | NSF Lead-Free Certified | ADA Compliant | UltraSeal™ | SecurePfit™

Kenzo™
Slide Bar/Hand Shower Kit

Model	Finish	Case Qty	List Price
★ LG16-3DFC	Polished Chrome	3	$457
★ LG16-3DFK	Brushed Nickel	3	$608
★ LG16-3DFB	Matte Black	3	$709

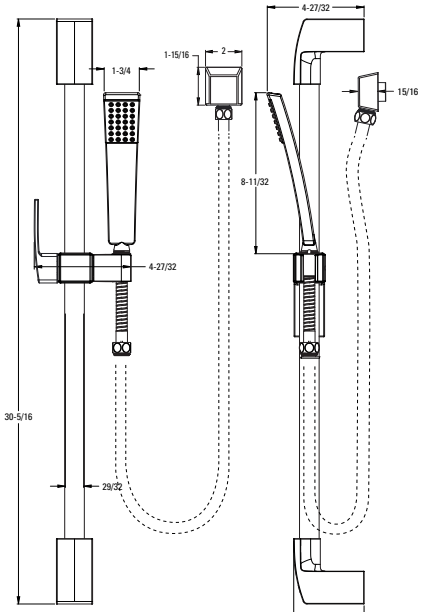

Technical Info

Features:
- Complete Slide Bar Package with Hand Shower, Hose, Drop Elbow, and Slide Bar
- Wall Mount Bracket and Drop Elbow
- Easy To Clean Spray Nozzles
- 60" Metal Hose with Matching Finish
- Back Flow Prevention
- Works with Kenzo Diverter Trim and Valve
- Not to be Used as a Grab Bar
- Hand Shower 1.8 gpm @ 80 psi

Rhen™
Slide Bar/Hand Shower Kit

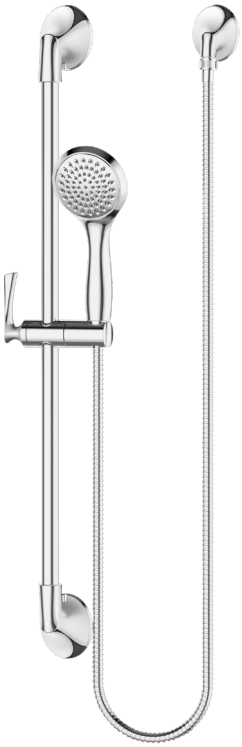

LG16-3RHC	Polished Chrome	3	$433
LG16-3RHK	Brushed Nickel	3	$572
LG16-3RHB	Matte Black	3	$668
LG16-3RHBG	Brushed Gold	3	$698

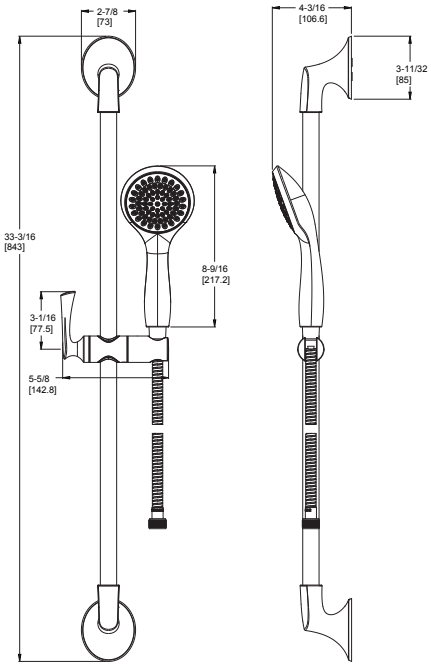

Features:
- Complete Slide Bar Package With Hand Shower, Hose, Drop Elbow, and Slide Bar
- Self Cleaning Hand Held Showerhead
- 60" Metal Hose with Matching Finish
- Back Flow Prevention
- Works with Rhen Diverter Trim and Valve
- Not to be Used as a Grab Bar
- Hand Shower 1.8 gpm @ 60 psi

Showers

Core Offering | CEC Compliant | Cal Green Compliant | Meets EPA WaterSenseSM Standards | NSF Lead-Free Certified | ADA Compliant | UltraSeal™ | SecurePfit™

Tenet™
Slide Bar/Hand Shower Kit

Model	Finish	Case Qty	List Price
LG16-3TNTC	Polished Chrome	3	$451
LG16-3TNTK	Brushed Nickel	3	$597
LG16-3TNTB	Matte Black	3	$597
LG16-3TNTBG	Brushed Gold	3	$727

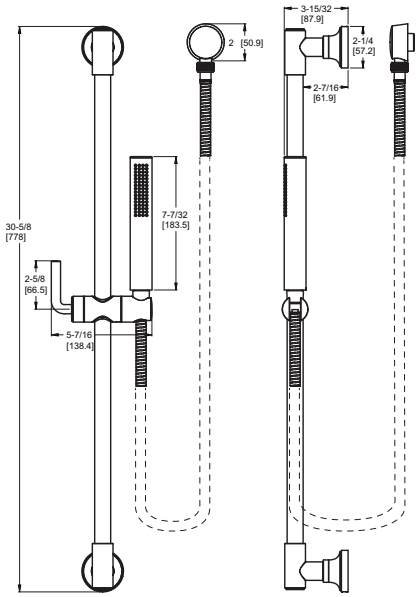

Technical Info

Features:
- Complete Slide Bar Package with Handheld Shower, Hose, Drop Elbow, Slide Bar, and Wall Mount Bracket
- All Metal Slide Bar
- Optional Cross Handle HHL-G16TNT*
- Easy To Clean Spray Nozzles
- 60" Metal Hose with Matching Finish
- Back Flow Prevention
- Works with Tenet Diverter Trim and Valve
- Both Finished Matched Metal and White Ceramic Inserts Included
- Not to Be Used as a Grab Bar
- Hand Shower 1.8 gpm @ 80 psi

Tisbury™
Slide Bar/Hand Shower Kit

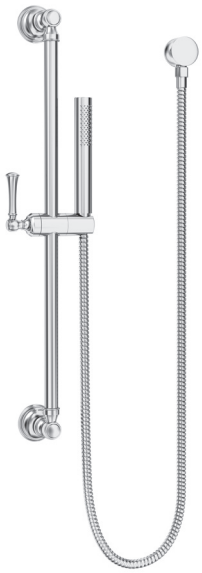

LG16-3TBC	Polished Chrome	3	$384
LG16-3TBK	Brushed Nickel	3	$548
LG16-3TBD	Polished Nickel	3	$548
LG16-3TBBG	Brushed Gold	3	$643

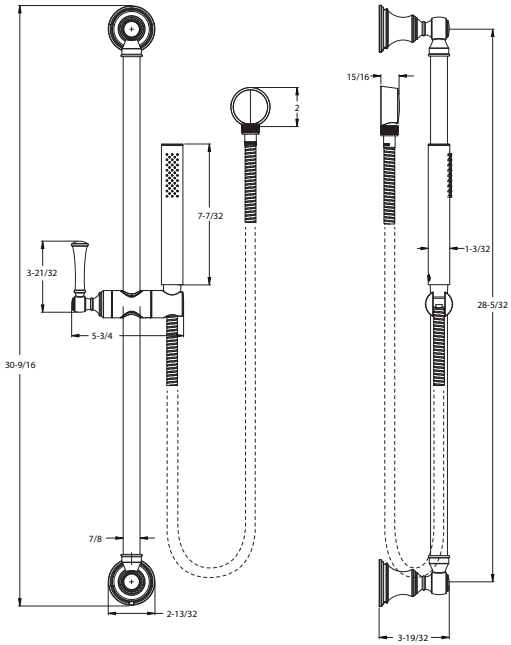

Features:
- Complete Slide Bar Package with Handheld Shower, Hose, Drop Elbow, Slide Bar, and Wall Mount Bracket
- All Metal Slide Bar
- Optional Cross Handle HHL-G16TB*
- Easy To Clean Spray Nozzles
- 60" Metal Hose with Matching Finish
- Back Flow Prevention
- Works with Tisbury Diverter Trim and Valve
- Both Finished Matched Metal and White Ceramic Inserts Included
- Not to Be Used as a Grab Bar
- Hand Shower 1.8 gpm @ 80 psi

Core Offering | CEC Compliant | Cal Green Compliant | Meets EPA WaterSenseSM Standards | NSF Lead-Free Certified | ADA Compliant | UltraSeal™ | SecurePfit™

Slide Bar Package

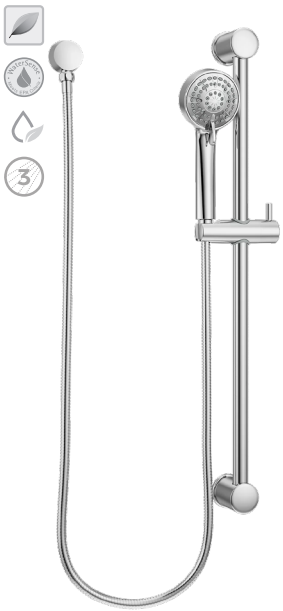

	Model	Finish	Case Qty	List Price
★	LG16-5ØØC	Polished Chrome	6	$295
★	LG16-5ØØK	Brushed Nickel	6	$440
	LG16-5ØØD	Polished Nickel	6	$495
★	LG16-5ØØB	Matte Black	6	$525
	LG16-5ØØBG	Brushed Gold	6	$550

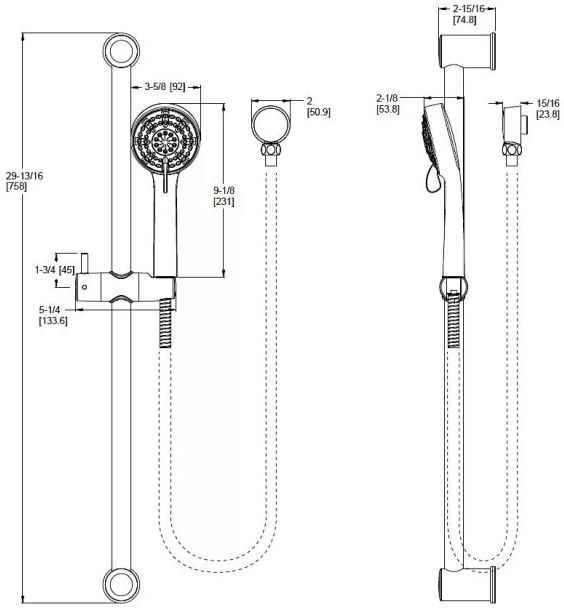

Technical Info

Features:

- Complete Slide Bar Package with Hand Shower, Hose, Drop Elbow, and Slide Bar
- Metal Slide Bar
- Easy To Clean Spray Nozzles
- 60" Metal Hose with Matching Finish
- Functions: Penetrating Massage, Rain Spray and Invigorating Spray
- Multifunction handheld shower gives you three unique spray functions and a pause (Non Positive Shutoff) feature
- Pause function temporarily reduces water flow to less than 0.5 gpm
- Not to be Used as a Grab Bar
- Hand Shower 1.8 gpm @ 80 psi

Contempra™
3 Piece Handheld Shower Kit

	Model	Finish	Case Qty	List Price
★	LG16-2NCC	Polished Chrome	3	$330
	LG16-2NCK	Brushed Nickel	3	$495
★	LG16-2NCB	Matte Black	3	$535
	LG16-2NCBG	Brushed Gold	3	$556

Technical Info

Features:
- 1.8 GPM Flow Rate
- 60" Metal Hose
- All Metal Construction
- Easy to Clean Nozzles
- Mounting Hardware Included
- Valve Not Included

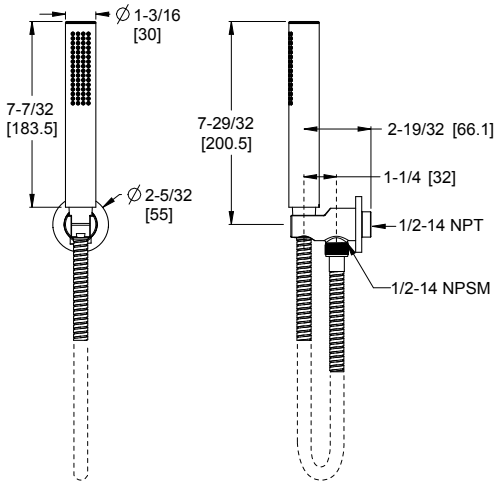

Kenzo™
3 Piece Handheld Shower Kit

	Model	Finish	Case Qty	List Price
★	LG16-2DFC	Polished Chrome	1	$244
★	LG16-2DFK	Brushed Nickel	1	$379
★	LG16-2DFB	Matte Black	1	$389

Features:
- 1.8 GPM Flow Rate
- 60" Metal Hose
- All Metal Construction
- Easy to Clean Nozzles
- Mounting Hardware Included
- Valve Not Included

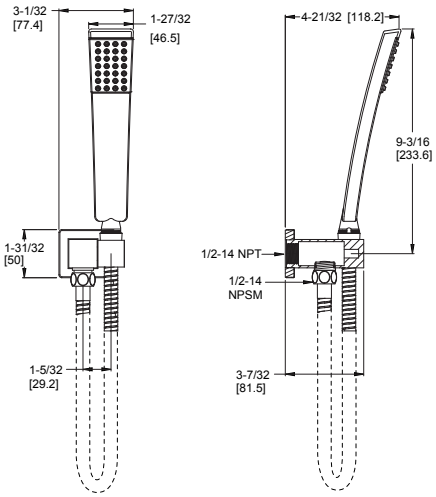

Showers

Core Offering · CEC Compliant · Cal Green Compliant · Meets EPA WaterSenseSM Standards · NSF Lead-Free Certified · ADA Compliant · UltraSeal™ · SecurePfit™

Ceiling Mount Shower Arm & Flange

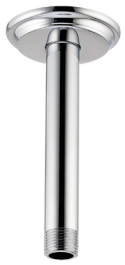

	Model	Finish	Case Qty	List Price
	Ø15-Ø6CC	Polished Chrome	1	$60
	Ø15-Ø6CK	Brushed Nickel	1	$86
	Ø15-Ø6CB	Matte Black	1	$106
	Ø15-Ø6CBG	Brushed Gold	1	$117

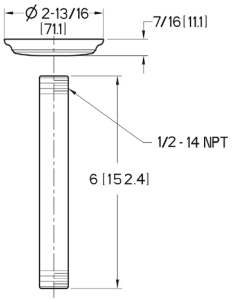

Technical Info

Features:
- 6" Straight Shower Arm
- 1/2"-14 NPT Thread Size

Straight Shower Arm

	Model	Finish	Case Qty	List Price
★	973-1Ø3A	Polished Chrome	1	$59
★	973-1Ø3J	Brushed Nickel	1	$71
	973-1Ø3D	Polished Nickel	1	$100
★	973-1Ø3B	Matte Black	1	$130
★	973-1Ø3Y	Tuscan Bronze	1	$87
	973-1Ø3BG	Brushed Gold	1	$159

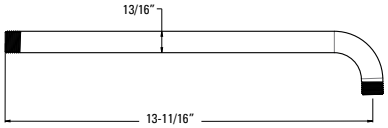

Features:
- 13 11/16" Length
- Brass Shower Arm
- 1/2" NPT Male Connections

Curved Shower Arm

	Model	Finish	Case Qty	List Price
★	973-Ø3ØA	Polished Chrome	1	$17
★	973-Ø3ØJ	Brushed Nickel	1	$40
	973-Ø3ØY	Tuscan Bronze	1	$27
	973-Ø3ØD	Polished Nickel	1	$25
★	973-Ø3ØB	Matte Black	1	$23
	973-Ø3ØBG	Brushed Gold	1	$34

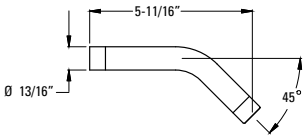

Features:
- 5 11/16' Length
- Brass Shower Arm
- 1/2" NPT Male Connections

Contempra® Shower Arm Flange

	Model	Finish	Case Qty	List Price
★	96Ø-258A	Polished Chrome	1	$18
	96Ø-258J	Brushed Nickel	1	$25
★	96Ø-258B	Matte Black	1	$19
	96Ø-258BG	Brushed Gold	1	$22

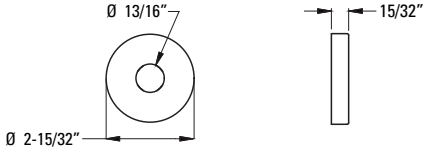

Features:
- All Metal
- Matches Contempra Style & Finishes

★ Core Offering | CEC Compliant | Cal Green Compliant | Meets EPA WaterSenseSM Standards | NSF Lead-Free Certified | ADA Compliant | UltraSeal™ | SecurePfit™

Deckard™ Shower Arm Flange

	Model	Finish	Case Qty	List Price
★	96Ø-331A	Polished Chrome	1	$9
★	96Ø-331J	Brushed Nickel	1	$10
★	96Ø-331B	Matte Black	1	$11

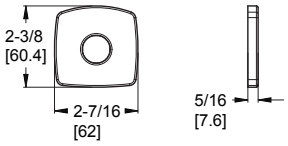

Technical Info

Features:
- All Metal
- Matches Deckard Style & Finishes

Kenzo™ Shower Arm Flange

	96Ø-Ø97A	Polished Chrome	1	$15
	96Ø-Ø97B	Matte Black	1	$17

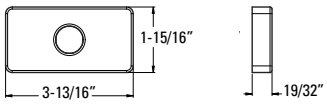

Features:
- All Metal
- Matches Kenzo Style & Finishes

Contempra® Stacked Pressure Balance Valve Only Trim

★	R89-SNCC	Polished Chrome	6	$222
	R89-SNCK	Brushed Nickel	6	$249
★	R89-SNCB	Matte Black	6	$274
	R89-SNCBG	Brushed Gold	6	$284

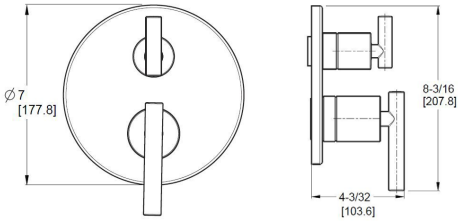

Features:
- SecurePfit™
- Metal Lever Handle
- Hot/Cold Indicator

Must order Ø15-3WDNS (Non-Shared, Cal Green Compliant) or Ø15-6WDS (Shared) Stacked Rough-In Valve Separately. See Valve Section.

Contempra® Diverter Trim

	Ø16-NC1C	Polished Chrome	3	$99
	Ø16-NC1K	Brushed Nickel	3	$131
	Ø16-NC1B	Matte Black	3	$130
	Ø16-NC1BG	Brushed Gold	3	$157

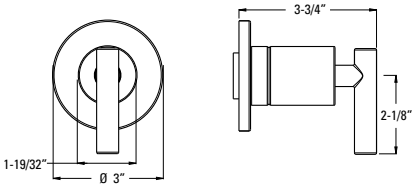

Features:
- SecurePfit™
- Metal Lever Handle and Matching Flange

Core Offering | CEC Compliant | Cal Green Compliant | Meets EPA WaterSenseSM Standards | NSF Lead-Free Certified | ADA Compliant | UltraSeal™ | SecurePfit™

Deckard™ Diverter Trim

Model	Finish	Case Qty	List Price
Ø16-DAØC	Polished Chrome	3	$67
Ø16-DAØK	Brushed Nickel	3	$83
Ø16-DAØB	Matte Black	3	$100

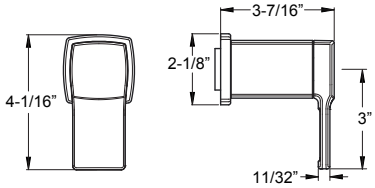

Features:
- SecurePfit™
- Metal Lever Handle and Matching Flange

Deckard™ Stacked Diverter Trim Only

Model	Finish	Case Qty	List Price
★ R89-SDAC	Polished Chrome	6	$296
R89-SDAK	Brushed Nickel	6	$332
★ R89-SDAB	Matte Black	6	$363

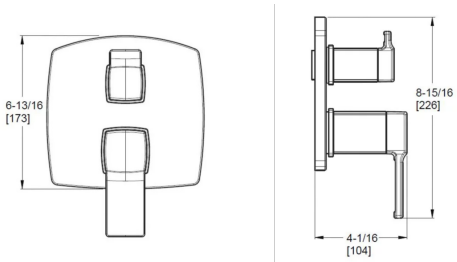

Features:
- SecurePfit™
- Metal Lever Handle
- Hot/Cold Indicator

Must order Ø15-3WDNS (Non-Shared, Cal Green Compliant) or Ø15-6WDS (Shared) Stacked Rough-In Valve Separately. See Valve Section.

Kenzo™ Diverter Trim

Model	Finish	Case Qty	List Price
Ø16-DFØC	Polished Chrome	3	$124
Ø16-DFØK	Brushed Nickel	3	$165
Ø16-DFØB	Matte Black	3	$181

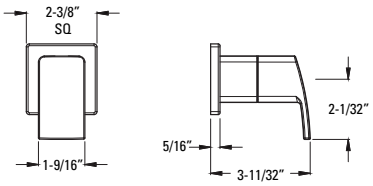

Features:
- SecurePfit™
- Metal Lever Handle and Matching Flange
- Can be used with Ø15-2WDX or Ø15-3WDNS for Cal Green Compliance

Must order Ø15-3WDNS (Non-Shared, Cal Green Compliant) or Ø15-6WDS (Shared) Rough-In Valve Separately. See Valve Section.

Rhen™ Diverter Trim

Model	Finish	Case Qty	List Price
Ø16-RH1C	Polished Chrome	3	$140
Ø16-RH1K	Brushed Nickel	3	$193
Ø16-RH1B	Matte Black	3	$215
Ø16-RH1BG	Brushed Gold	3	$232

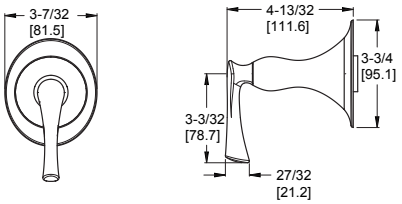

Features:
- SecurePfit™
- Metal Lever Handle and Matching Flange
- Can be used with Ø15-2WDX or Ø15-3WDNS for Cal Green Compliance

Must order Ø15-3WDNS (Non-Shared, Cal Green Compliant) or Ø15-6WDS (Shared) Rough-In Valve Separately. See Valve Section.

Showers

Core Offering | CEC Compliant | Cal Green Compliant | Meets EPA WaterSenseSM Standards | NSF Lead-Free Certified | ADA Compliant | UltraSeal™ | SecurePfit™

Tenet™ Diverter Trim

Model	Finish	Case Qty	List Price
Ø16-TNT1C	Polished Chrome	3	$146
Ø16-TNT1K	Brushed Nickel	3	$202
Ø16-TNT1B	Matte Black	3	$224
Ø16-TNT1BG	Brushed Gold	3	$244

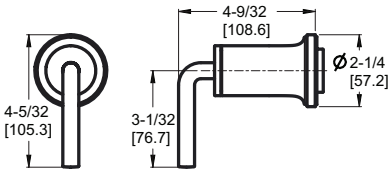

Technical Info

Features:
- SecurePfit™
- Metal Lever Handle and Matching Flange
- Can be used with Ø15-2WDX or Ø15-3WDNS for Cal Green Compliance
- Optional cross handles available, Order HHL-016TNT* seperately"

Must order Ø15-3WDNS (Non-Shared, Cal Green Compliant) or Ø15-2WDX (Shared) Rough-In Valve Separately. See Valve Section.

Tisbury™ Diverter Trim

Ø16-TB1C	Polished Chrome	3	$139
Ø16-TB1K	Brushed Nickel	3	$185
Ø16-TB1D	Polished Nickel	3	$185
Ø16-TB1BG	Brushed Gold	3	$242

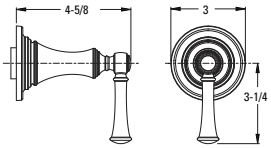

Features:
- SecurePfit™
- Metal Lever Handle and Matching Flange
- Can be used with Ø15-2WDX or Ø15-3WDNS for Cal Green Compliance
- Optional Cross Handle HHL-Ø16TB*
- Both Finished Matched Metal and Ceramic Caps Included

Must Order Ø15-4WDX or Ø15-3WDX Rough In Valve Separately. See Valve Section.

Contempra® Tub Spout

★	92Ø-227A	Polished Chrome	1	$103
	92Ø-227J	Brushed Nickel	1	$129
★	92Ø-227B	Matte Black	1	$113
	92Ø-227BG	Brushed Gold	1	$122

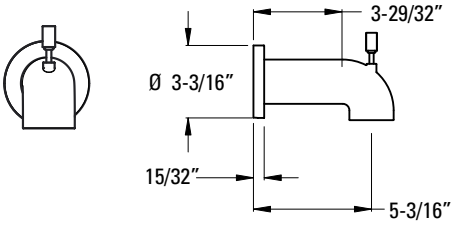

Features:
- All Metal
- IP & Quick Connect Diverter Spout

Deckard™ Tub Spout

★	92Ø-2Ø8A	Polished Chrome	1	$96
★	92Ø-2Ø8J	Brushed Nickel	1	$124
★	92Ø-2Ø8B	Tuscan Bronze	1	$117

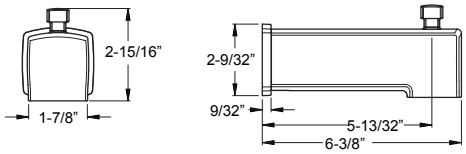

Features:
- All Metal
- IP & Quick Connect Diverter Spout

Core Offering | CEC Compliant | Cal Green Compliant | Meets EPA WaterSenseSM Standards | NSF Lead-Free Certified | ADA Compliant | UltraSeal™ | SecurePfit™

Kenzo™ Tub Spout

Model	Finish	Case Qty	List Price
92Ø-623A	Polished Chrome	1	$76
92Ø-623B	Matte Black	1	$112

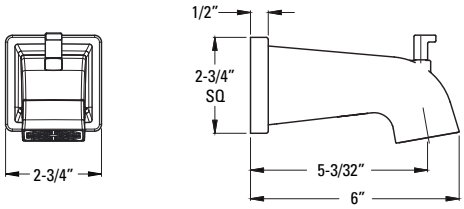

Technical Info

Features:
- All Metal
- IP & Quick Connect Diverter Spout

Round Non-Diverter Tub Spout

	Model	Finish	Case Qty	List Price
★	92Ø-246A	Polished Chrome	1	$80
	92Ø-246J	Brushed Nickel	1	$113
★	92Ø-246B	Matte Black	1	$127
	92Ø-246BG	Brushed Gold	1	$133

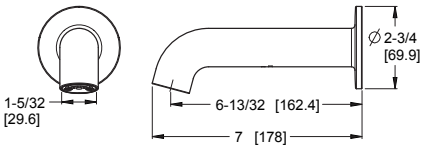

Features:
- All Metal Construction
- Includes copper sweat adapter

Square Non-Diverter Tub Spout

	Model	Finish	Case Qty	List Price
★	92Ø-247A	Polished Chrome	1	$87
★	92Ø-247J	Brushed Nickel	1	$121
★	92Ø-247B	Matte Black	1	$131
	92Ø-247BG	Brushed Gold	1	$140

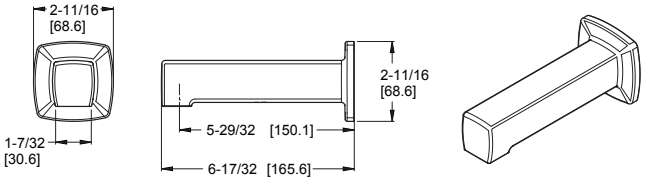

Features:
- All Metal Construction
- Includes copper sweat adapter

Showers

Core Offering | CEC Compliant | Cal Green Compliant | Meets EPA WaterSenseSM Standards | NSF Lead-Free Certified | ADA Compliant | UltraSeal™ | SecurePfit™

Pfirst Series & Job Packs

This family includes a full-line-up of faucets for kitchen, laundry, lavatory and tub/shower. Even as an opening price point family collection, all of these faucets are covered by the Pfister Pforever Warranty. Superior design and great value, that's what Pfirst Series is all about.

Job Pack. P-8

Pull-Down / Pull-Out Kitchen Faucet

Single Handle Pull-Down Kitchen Faucet

	Model	Finish	Case Qty	List Price
★	G529-PF2C	Polished Chrome	3	$230
★	G529-PF2S	Stainless Steel	3	$259
	G529-PF2Y	Tuscan Bronze	3	$288
★	G529-PF2B	Matte Black	3	$288

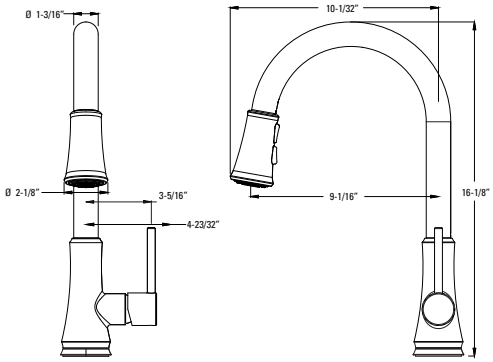

Technical Info

Holes: · 1-Hole Installation

Features:
- Ceramic Disc Valve
- High Arc Swivel Spout
- Metal Lever Handle
- Three-Function Sprayhead: Stream, Spray, and Pause
- Optional 3-Hole Installation Deck Plate Available, Order 961-250* Separately
- Forward Only Handle Operation
- 1.8 gpm @ 60 psi

Single Handle Pull-Out Kitchen Faucet

★	G133-1ØCC	Polished Chrome	3	$180
★	G133-1ØSS	Stainless Steel	3	$208

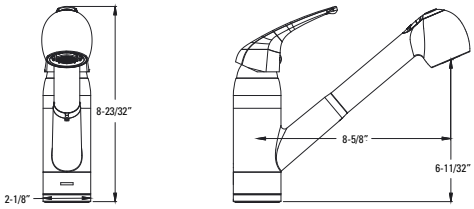

Holes: · 1 or 3-Hole 8" Installation

Features:
- Ceramic Disc Valve
- Metal Lever Handle
- Swivel Spout
- Two-Function Sprayhead: Stream and Spray
- Single Post Mounting Ring and 3-Hole Deckplate
- 38" Pull-Out Hose
- Order 941-372Ø for 1.5 gpm Aerator
- 1.8 gpm @ 60 psi

Single Control Kitchen Faucet

Single Handle Kitchen Faucet

Model	Finish	Case Qty	List Price
G134-5ØØØ	Polished Chrome	3	$128

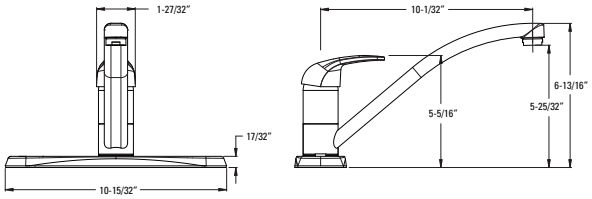

Technical Info

Holes: · 3-Hole 8" Installation

Features:
- Ceramic Disc Valve
- Metal Lever Handle
- Swivel Spout
- 1.8 gpm @ 60 psi

Core Offering · CEC Compliant · Cal Green Compliant · Meets EPA WaterSenseSM Standards · NSF Lead-Free Certified · ADA Compliant · UltraSeal™ · SecurePfit™

Single Control Kitchen Faucet

	Model	Finish	Case Qty	List Price
Single Handle Kitchen Faucet ★	G134-1444	Polished Chrome	3	$91

Technical Info

Holes: · 3-Hole 8" Installation

Features:
· Stainless Steel Ball Valve
· Metal Lever Handle
· Swivel Spout
· Order 941-372Ø for 1.5 gpm Aerator
· 1.8 gpm @ 60 psi

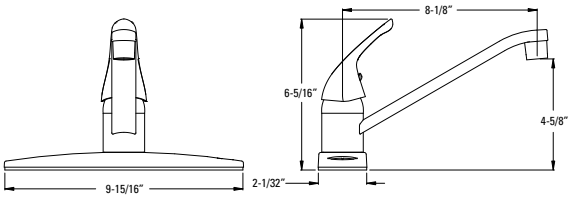

	Model	Finish	Case Qty	List Price
Single Handle Kitchen Faucet with Spray ★	G134-3444	Polished Chrome	3	$103

Holes: · 3-Hole 8" Installation

Features:
· Stainless Steel Ball Valve
· Metal Lever Handle
· Swivel Spout
· Matching Finish Sidespray
· Order 941-372Ø for 1.5 gpm Aerator
· 1.8 gpm @ 60 psi

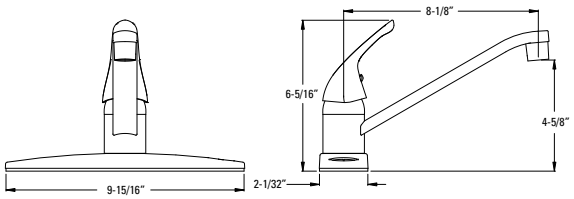

Two-Handle Kitchen Faucet

	Model	Finish	Case Qty	List Price
Two-Handle Kitchen Faucet	G135-1ØØØ	Polished Chrome	3	$83

Technical Info

Holes: · 3-Hole 8" Installation

Features:
· Washerless Cartridges
· Swivel Spout
· 1.8 gpm @ 60 psi

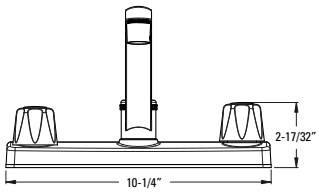

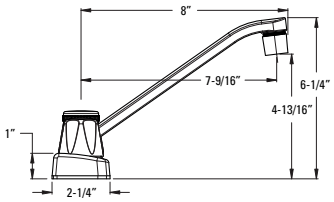

★ Core Offering · CEC Compliant · Cal Green Compliant · Meets EPA WaterSense℠ Standards · NSF Lead-Free Certified · ADA Compliant · UltraSeal™ · SecurePfit™

Single Control Lavatory Faucets

Pfirst Modern™ Single Control Lavatory

	Model	Finish	Case Qty	List Price
★	LG142-Ø6ØØ	Polished Chrome	3	$172
★	LG142-Ø6ØK	Brushed Nickel	3	$229
★	LG142-Ø6ØB	Matte Black	3	$297

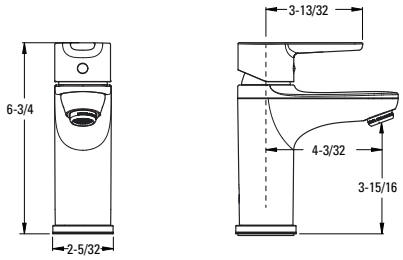

Technical Info

Holes: · 1 Installation

Features:
- Ceramic Disc Valve
- Metal Lever Handles
- High Temperature Limit Stop
- Optional 3-Hole Deck Plate. Order 961-217*
- Push & Seal Drain Included
- 1.2 gpm @ 60 psi

Single Control Lavatory

LG142-5ØØØ	Polished Chrome	3	$73

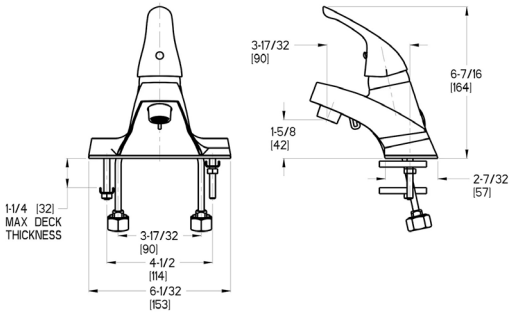

Holes: · 3-Hole 4" Installation

Features:
- Stainless Steel Ball Valve
- Metal Lever Handle
- Push & Seal Drain Included
- 1.2 gpm @ 60 psi

Single Control Lavatory

★	LG142-8ØØØ	Polished Chrome	3	$127
	LG142-8ØØK	Brushed Nickel	3	$160

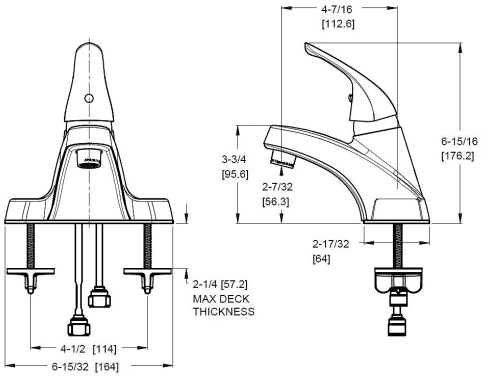

Holes: · 3-Hole 4" Installation

Features:
- Stainless Steel Ball Valve
- Metal Lever Handle
- Push & Seal Drain Included
- 1.2 gpm @ 60 psi

Core Offering · CEC Compliant · Cal Green Compliant · Meets EPA WaterSenseSM Standards · NSF Lead-Free Certified · ADA Compliant · UltraSeal™ · SecurePfit™

4" Centerset Lavatory Faucets

	Model	Finish	Case Qty	List Price
4" Centerset Lavatory ★	LG148-7ØØØ	Polished Chrome	3	$143
	LG148-7ØØK	Brushed Nickel	3	$175

Technical Info

Holes: · 3-Hole 4" Installation

Features:
- Ceramic Disc Valves
- Metal Lever Handles
- High Arc Fixed Spout
- Push & Seal Drain Included
- 1.2 gpm @ 60 psi

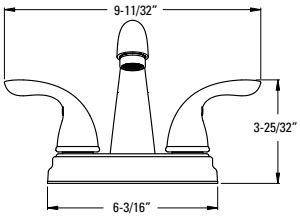

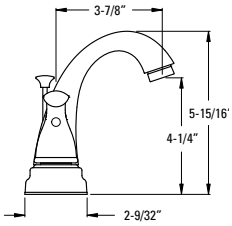

Bar / Laundry Faucet

	Model	Finish	Case Qty	List Price
Bar/Ent. Faucet ★	G171-4ØØØ	Polished Chrome	3	$63

Technical Info

Holes: · 2-Hole 4" Installation

Features:
- Washerless Cartridges
- Metal Handles
- 1.8 gpm @ 60 psi

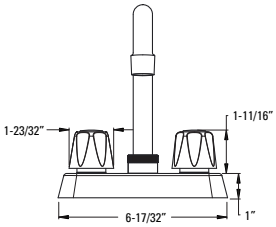

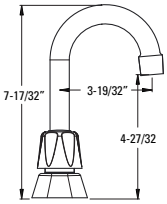

Core Offering · CEC Compliant · Cal Green Compliant · Meets EPA WaterSenseSM Standards · NSF Lead-Free Certified · ADA Compliant · UltraSeal™ · SecurePfit™

Tub & Shower

Pfirst Modern™ Pressure Balance Tub & Shower Trim

	Model	Finish	Case Qty	List Price
★	R89-Ø7ØØ	Polished Chrome	3	$102
	R89-Ø7ØK	Brushed Nickel	3	$138
★	R89-Ø7ØB	Matte Black	3	$187

Technical Info

Holes: · 3-Hole Installation

Features:
- Quick Trim™ Wall Flange
- Metal Lever Handle
- Hot/Cold Indicator
- 5" IP & Quick Connect Metal Diverted Tub Spout
- Must Order Showerhead Separately
- Optional 6.5" IP & Quick Connect Metal Tub Spout Order 92Ø-185*

Must Order Pressure Balance Rough in Valve Separately. See Valve Section.

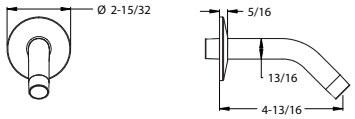

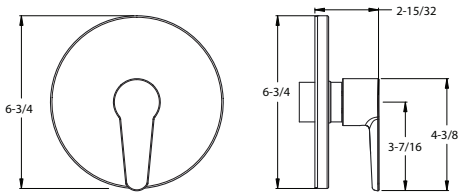

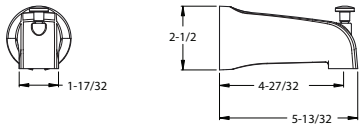

Pfirst Modern™ Pressure Balance Shower Trim

	Model	Finish	Case Qty	List Price
★	R89-Ø6ØØ	Polished Chrome	3	$69
	R89-Ø6ØK	Brushed Nickel	3	$97
★	R89-Ø6ØB	Matte Black	3	$161

Holes: · 2-Hole Installation

Features:
- Quick Trim™ Wall Flange
- Metal Lever Handle
- Hot/Cold Indicator
- Must Order Showerhead Separately

Must Order Pressure Balance Rough in Valve Separately. See Valve Section.

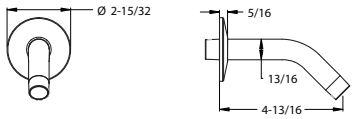

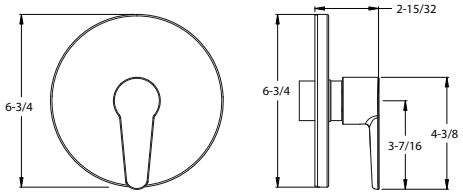

Core Offering · CEC Compliant · Cal Green Compliant · Meets EPA WaterSenseSM Standards · NSF Lead-Free Certified · ADA Compliant · UltraSeal™ · SecurePfit™

Pressure Balance Tub & Shower Trim

Model	Finish	Case Qty	List Price
LG89-Ø3ØØ	Polished Chrome	3	$54
LG89-Ø3ØK	Stainless Steel	3	$109

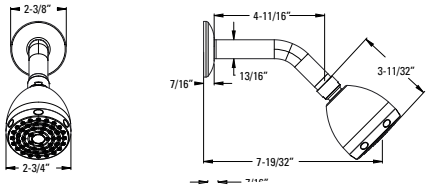

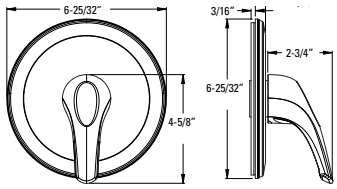

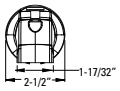

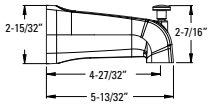

Holes: · 3-Hole Installation

Features:
- Quick Trim™ Wall Flange
- Metal Lever Handle
- Hot/Cold Indicator
- Bell Showerhead
- Easy To Clean Spray Nozzles
- Quick Connect Diverter Tub Spout
- Order 941-Ø55Ø for 1.5 gpm Showerhead Insert
- Showerhead 1.8 gpm @ 80 psi

Must Order Pressure Balance Rough in Valve Separately. See Valve Section.

Pressure Balance Shower Trim

Model	Finish	Case Qty	List Price
LG89-Ø2ØØ	Polished Chrome	3	$49
LG89-Ø2ØK	Brushed Nickel	3	$98

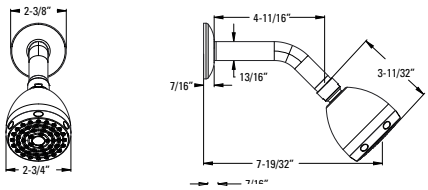

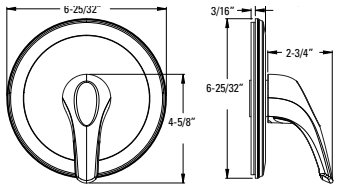

Holes: · 2-Hole Installation

Features:
- Quick Trim™ Wall Flange
- Metal Lever Handle
- Hot/Cold Indicator
- Bell Showerhead
- Easy To Clean Spray Nozzles
- Order 941-Ø55Ø for 1.5 gpm Showerhead Insert
- Showerhead 1.8 gpm @ 80 psi

Must Order Pressure Balance Rough in Valve Separately. See Valve Section.

Pfirst Modern™ Pressure Balance Valve Only Trim

Model	Finish	Case Qty	List Price
R89-Ø4ØØ	Polished Chrome	3	$57
R89-Ø4ØK	Brushed Nickel	3	$64
R89-Ø4ØB	Matte Black	3	$109

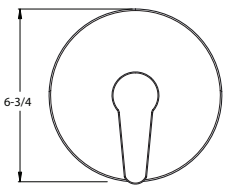

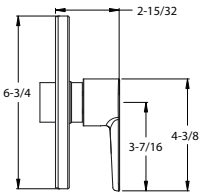

Features:
- Quick Trim™ Wall Flange
- Metal Lever Handle
- Hot/Cold Indicator

Must Order Pressure Balance Rough in Valve Separately. See Valve Section.

Core Offering · CEC Compliant · Cal Green Compliant · Meets EPA WaterSenseSM Standards · NSF Lead-Free Certified · ADA Compliant · UltraSeal™ · SecurePfit™

Job Pack - Shower

Brislin™
Job Pack Showerhead

	Model	Finish	Case Qty	List Price
★	LJ15-BIØC	Polished Chrome	12	$38
	LJ15-BIØK	Brushed Nickel	12	$53
★	LJ15-BIØB	Matte Black	12	$73

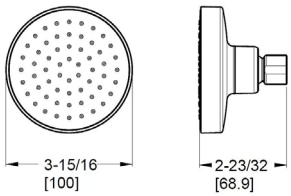

Technical Info

Features:
- Single Function
- JX = Job Pack Quantity Ships in Master Carton of 12
- Order 941-Ø55 for 1.5 gpm Showerhead Insert
- Showerhead 1.8 gpm @ 80 psi

Pfirst Series™
Job Pack Showerhead

★	LJ15-Ø6ØC	Polished Chrome	12	$22

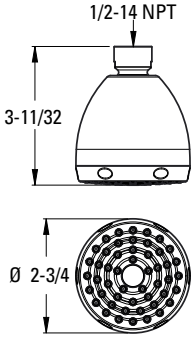

Features:
- Single Function
- JX = Job Pack Quantity Ships in Master Carton of 12
- Order 941-Ø55 for 1.5 gpm Showerhead Insert
- Showerhead 1.8 gpm @ 80 psi

Pfirst Modern™
Job Pack Showerhead

★	LJ15-Ø7ØC	Polished Chrome	12	$32
	LJ15-Ø7ØK	Brushed Nickel	12	$44
★	LJ15-Ø7ØB	Matte Black	12	$84

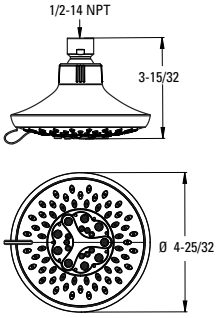

Features:
- Multi Function
- JX = Job Pack Quantity Ships in Master Carton of 12
- Showerhead 1.8 gpm @ 80 psi

Core Offering | CEC Compliant | Cal Green Compliant | Meets EPA WaterSenseSM Standards | NSF Lead-Free Certified | ADA Compliant | UltraSeal™ | SecurePfit™

Bath Accessories

The finishing touches that bring a stylish bathroom together. Our hardware and accessories are designed to complement your Pfister bath fixtures perfectly

18" Towel Bar

	Model	Finish	Case Qty	List Price
★	BTB-NC1C	Polished Chrome	3	$67
	BTB-NC1K	Brushed Nickel	3	$91
★	BTB-NC1B	Matte Black	3	$112
	BTB-NC1BG	Brushed Gold	3	$106

Technical Info

Holes: · 2-Hole

Features:
- Premium Metal Construction
- Superior Mounting Bracket
- Concealed Screw Installation
- Mounting Hardware Included

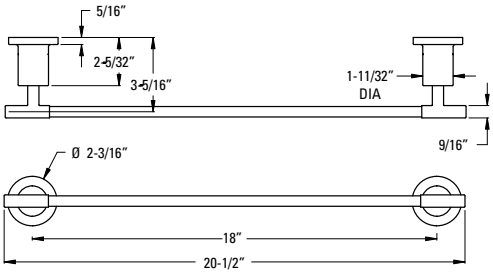

24" Towel Bar

	Model	Finish	Case Qty	List Price
★	BTB-NC2C	Polished Chrome	3	$73
	BTB-NC2K	Brushed Nickel	3	$99
★	BTB-NC2B	Matte Black	3	$125
	BTB-NC2BG	Brushed Gold	3	$115

Holes: · 2-Hole

Features:
- Premium Metal Construction
- Superior Mounting Bracket
- Concealed Screw Installation
- Mounting Hardware Included

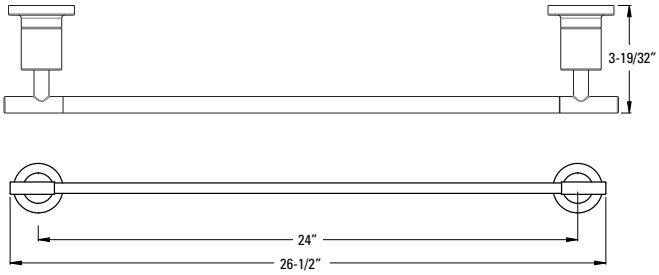

Towel Ring

	Model	Finish	Case Qty	List Price
★	BRB-NC1C	Polished Chrome	3	$53
	BRB-NC1K	Brushed Nickel	3	$67
★	BRB-NC1B	Matte Black	3	$91
	BRB-NC1BG	Brushed Gold	3	$84

Holes: · 1-Hole

Features:
- Premium Metal Construction
- Superior Mounting Bracket
- Concealed Screw Installation
- Mounting Hardware Included

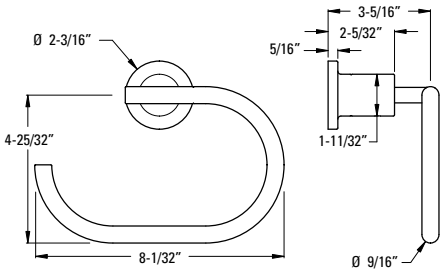

★ Core Offering

Paper Holder

	Model	Finish	Case Qty	List Price
★	BPH-NC1C	Polished Chrome	3	$53
	BPH-NC1K	Brushed Nickel	3	$73
★	BPH-NC1B	Matte Black	3	$91
	BPH-NC1BG	Brushed Gold	3	$84

Technical Info

Holes: · 2-Hole

Features:
- Swivel Mount Paper Holder
- Premium Metal Construction
- Superior Mounting Bracket
- Concealed Screw Installation
- Mounting Hardware Included

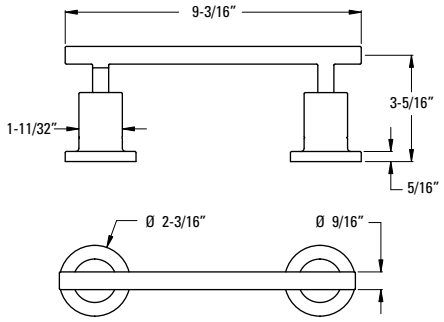

Robe Hook

	Model	Finish	Case Qty	List Price
★	BRH-NC1C	Polished Chrome	3	$40
	BRH-NC1K	Brushed Nickel	3	$53
★	BRH-NC1B	Matte Black	3	$69
	BRH-NC1BG	Brushed Gold	3	$62

Holes: · 1-Hole

Features:
- Premium Metal Construction
- Superior Mounting Bracket
- Concealed Screw Installation
- Mounting Hardware Included

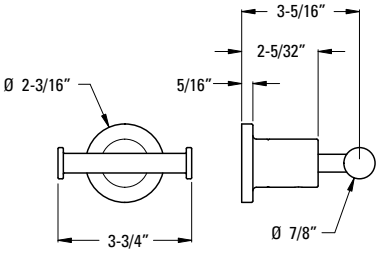

★ Core Offering

18" Towel Bar

	Model	Finish	Case Qty	List Price
★	BTB-DA1C	Polished Chrome	3	$61
★	BTB-DA1K	Brushed Nickel	3	$83
★	BTB-DA1B	Matte Black	3	$95

Technical Info

Holes: · 2-Hole

Features:
- All Metal Construction
- Superior Mounting Brackets
- Concealed Screw Installation
- Mounting Hardware Included

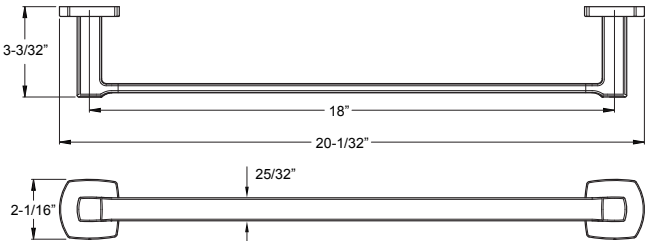

24" Towel Bar

	Model	Finish	Case Qty	List Price
★	BTB-DA2C	Polished Chrome	3	$72
★	BTB-DA2K	Brushed Nickel	3	$95
★	BTB-DA2B	Matte Black	3	$105

Holes: · 2-Hole

Features:
- All Metal Construction
- Superior Mounting Brackets
- Concealed Screw Installation
- Mounting Hardware Included

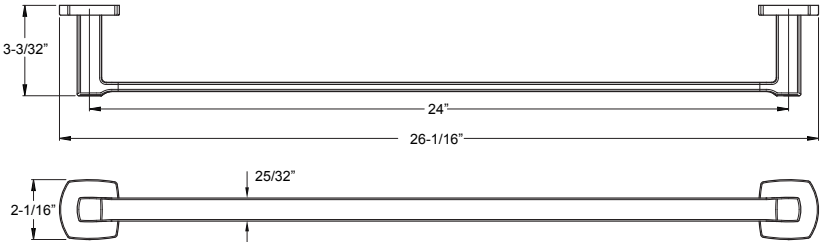

Towel Ring

	Model	Finish	Case Qty	List Price
★	BRB-DA1C	Polished Chrome	3	$49
★	BRB-DA1K	Brushed Nickel	3	$61
★	BRB-DA1B	Matte Black	3	$72

Holes: · 1-Hole

Features:
- All Metal Construction
- Superior Mounting Brackets
- Concealed Screw Installation
- Mounting Hardware Included

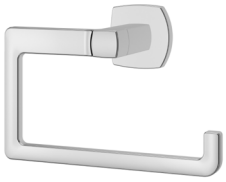

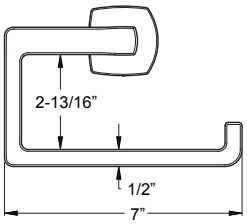

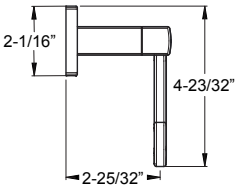

★ Core Offering

Paper Holder

	Model	Finish	Case Qty	List Price
★	BPH-DA1C	Polished Chrome	3	$56
★	BPH-DA1K	Brushed Nickel	3	$72
★	BPH-DA1B	Matte Black	3	$83

Technical Info

Holes: · 2-Hole

Features:
· All Metal Construction
· Superior Mounting Brackets
· Concealed Screw Installation
· Mounting Hardware Included

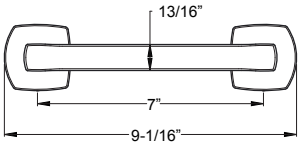

Robe Hook

	Model	Finish	Case Qty	List Price
★	BRH-DA1C	Polished Chrome	3	$22
★	BRH-DA1K	Brushed Nickel	3	$28
★	BRH-DA1B	Matte Black	3	$33

Holes: · 1-Hole

Features:
· All Metal Construction
· Superior Mounting Brackets
· Concealed Screw Installation
· Mounting Hardware Included

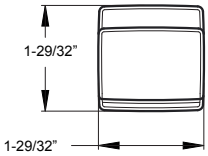

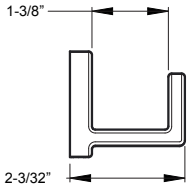

★ Core Offering

18" Towel Bar

Model	Finish	Case Qty	List Price
BTB-DF1C	Polished Chrome	3	$130
BTB-DF1K	Brushed Nickel	3	$190
BTB-DF1B	Matte Black	3	$197

Technical Info

Holes: · 2-Hole

Features:
- Premium Metal Construction
- Superior Mounting Posts
- Concealed Screw Installation
- Mounting Hardware Included

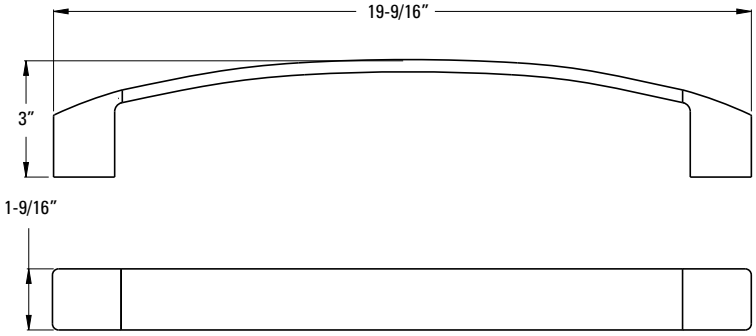

24" Towel Bar

BTB-DF2C	Polished Chrome	3	$159
BTB-DF2K	Brushed Nickel	3	$221
BTB-DF2B	Matte Black	3	$227

Holes: · 2-Hole

Features:
- Premium Metal Construction
- Superior Mounting Posts
- Concealed Screw Installation
- Mounting Hardware Included

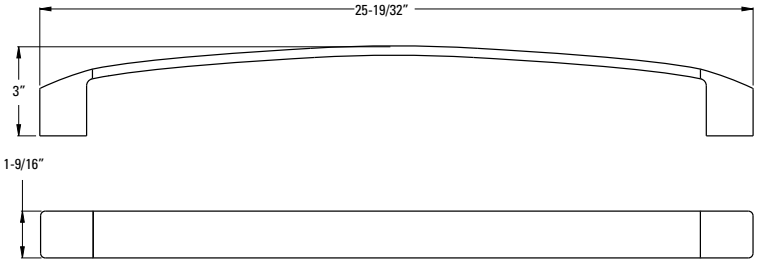

Towel Ring

BRB-DF1C	Polished Chrome	3	$121
BRB-DF1K	Brushed Nickel	3	$167
BRB-DF1B	Matte Black	3	$171

Holes: · 2-Hole

Features:
- Premium Metal Construction
- Superior Mounting Posts
- Concealed Screw Installation
- Mounting Hardware Included

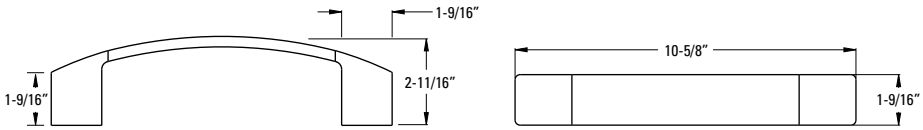

Paper Holder

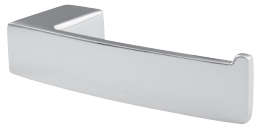

Model	Finish	Case Qty	List Price
BPH-DF1C	Polished Chrome	3	$100
BPH-DF1K	Brushed Nickel	3	$138
BPH-DF1B	Matte Black	3	$144

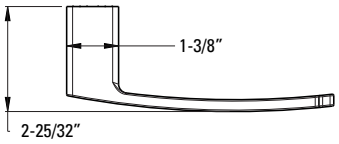

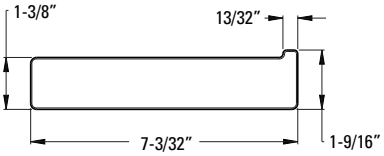

Technical Info

Holes: · 1-Hole

Features:
- Premium Metal Construction
- Superior Mounting Posts
- Concealed Screw Installation
- Mounting Hardware Included

Robe Hook

Model	Finish	Case Qty	List Price
BRH-DF1C	Polished Chrome	3	$78
BRH-DF1K	Brushed Nickel	3	$108
BRH-DF1B	Matte Black	3	$110

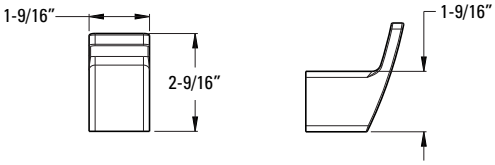

Holes: · 1-Hole

Features:
- Premium Metal Construction
- Superior Mounting Posts
- Concealed Screw Installation
- Mounting Hardware Included

18" Towel Bar

	Model	Finish	Case Qty	List Price
★	BTB-PFM1C	Polished Chrome	3	$63
★	BTB-PFM1GS	Brushed Nickel	3	$69
★	BTB-PFM1B	Matte Black	3	$77

Technical Info

Holes: · 2-Hole

Features:
- All Metal Construction
- Standard Mounting Bracket
- Concealed Screw Installation
- Mounting Hardware Included

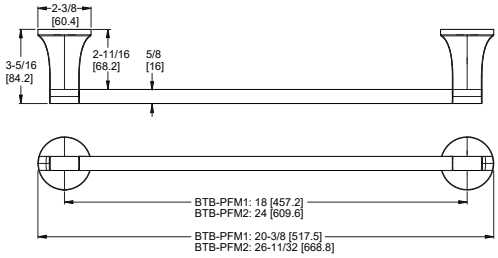

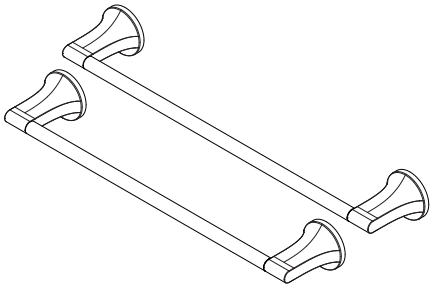

24" Towel Bar

★	BTB-PFM2C	Polished Chrome	3	$67
★	BTB-PFM2GS	Brushed Nickel	3	$74
★	BTB-PFM2B	Matte Black	3	$80

Holes: · 2-Hole

Features:
- All Metal Construction
- Standard Mounting Bracket
- Concealed Screw Installation
- Mounting Hardware Included

Towel RIng

★	BRB-PFMØC	Polished Chrome	3	$55
★	BRB-PFMØGS	Brushed Nickel	3	$62
★	BRB-PFMØB	Matte Black	3	$68

Holes: · 1-Hole

Features:
- All Metal Construction
- Standard Mounting Bracket
- Concealed Screw Installation
- Mounting Hardware Included

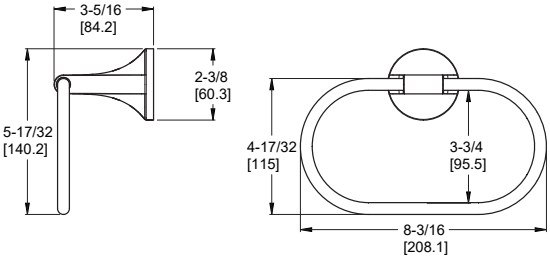

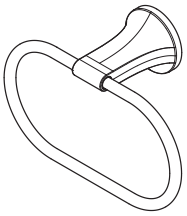

★ Core Offering

Paper Holder

	Model	Finish	Case Qty	List Price
★	BPH-PFMØC	Polished Chrome	3	$52
★	BPH-PFMØGS	Brushed Nickel	3	$60
★	BPH-PFMØB	Matte Black	3	$66

Technical Info

Holes: · 1-Hole

Features:
· All Metal Construction
· Standard Mounting Bracket
· Concealed Screw Installation
· Mounting Hardware Included

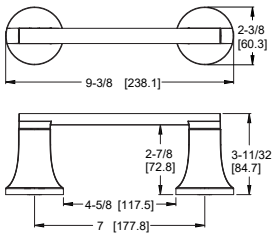

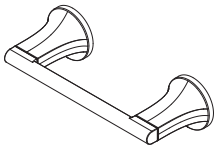

Robe Hook

	Model	Finish	Case Qty	List Price
★	BRH-PFMØC	Polished Chrome	3	$34
★	BRH-PFMØGS	Brushed Nickel	3	$40
★	BRH-PFMØB	Matte Black	3	$47

Holes: · 1-Hole

Features:
· All Metal Construction
· Standard Mounting Bracket
· Concealed Screw Installation
· Mounting Hardware Included

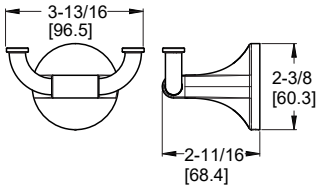

★ Core Offering

18" Towel Bar

Model	Finish	Case Qty	List Price
BTB-RH1C	Polished Chrome	3	$144
BTB-RH1K	Brushed Nickel	3	$155
BTB-RH1B	Matte Black	3	$169
BTB-RH1BG	Brushed Gold	3	$183

Technical Info

Holes: · 2-Hole

Features:
· Premium Metal Construction
· Superior Mounting Posts
· Concealed Screw Installation
· Mounting Hardware Included

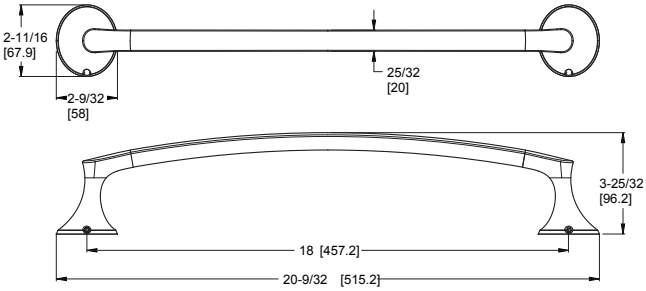

24" Double Towel Bar

BTB-RH2C	Polished Chrome	3	$209
BTB-RH2K	Brushed Nickel	3	$222
BTB-RH2B	Matte Black	3	$235
BTB-RH2BG	Brushed Gold	3	$249

Holes: · 2-Hole

Features:
· Premium Metal Construction
· Superior Mounting Posts
· Concealed Screw Installation
· Mounting Hardware Included

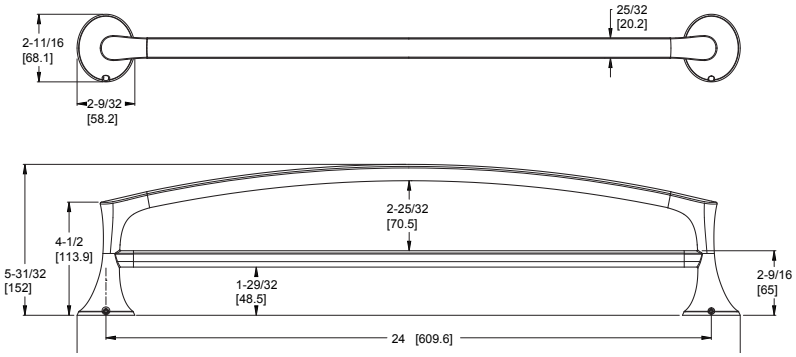

Towel Ring

BRB-RHØC	Polished Chrome	3	$110
BRB-RHØK	Brushed Nickel	3	$122
BRB-RHØB	Matte Black	3	$136
BRB-RHØBG	Brushed Gold	3	$149

Holes: · 1-Hole

Features:
· Premium Metal Construction
· Superior Mounting Posts
· Concealed Screw Installation
· Mounting Hardware Included

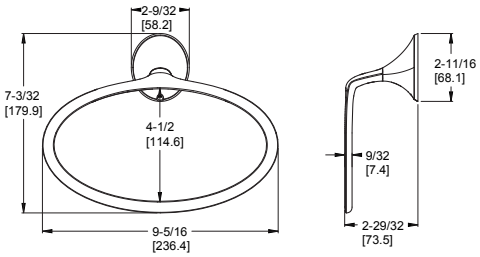

Paper Holder

Model	Finish	Case Qty	List Price
BPH-RHØC	Polished Chrome	3	$108
BPH-RHØK	Brushed Nickel	3	$127
BPH-RHØB	Matte Black	3	$142
BPH-RHØBG	Brushed Gold	3	$155

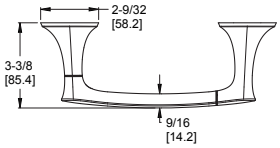

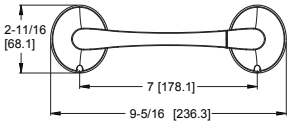

Technical Info

Holes: · 2-Hole

Features:
- Premium Metal Construction
- Pivot Swing Paper Mount
- Concealed Screw Installation
- Mounting Hardware Included

Robe Hook

BRH-RHØC	Polished Chrome	3	$74
BRH-RHØK	Brushed Nickel	3	$86
BRH-RHØB	Matte Black	3	$101
BRH-RHØBG	Brushed Gold	3	$113

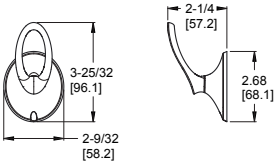

Holes: · 1-Hole

Features:
- Premium Metal Construction
- Superior Mounting Posts
- Concealed Screw Installation
- Mounting Hardware Included

	Model	Finish	Case Qty	List Price
18” Towel Bar	BTB-1TNTC	Polished Chrome	6	$150
	BTB-1TNTK	Brushed Nickel	6	$163
	BTB-1TNTB	Matte Black	6	$177
	BTB-1TNTBG	Brushed Gold	6	$190

Technical Info

Holes: · 2-Hole Installation

Features:
· Premium Metal Construction
· Superior Mounting Posts
· Concealed Screw Installation
· Mounting Hardware Included

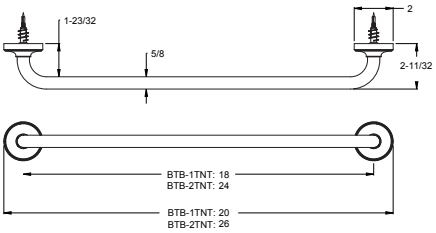

	Model	Finish	Case Qty	List Price
24” Towel Bar	BTB-2TNTC	Polished Chrome	6	$215
	BTB-2TNTK	Brushed Nickel	6	$229
	BTB-2TNTB	Matte Black	6	$243
	BTB-2TNTBG	Brushed Gold	6	$256

Holes: · 2-Hole Installation

Features:
· Premium Metal Construction
· Superior Mounting Posts
· Concealed Screw Installation
· Mounting Hardware Included

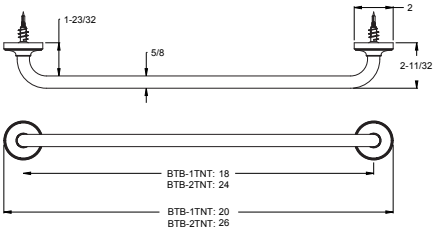

	Model	Finish	Case Qty	List Price
Towel Ring	BRB-TNTC	Polished Chrome	8	$114
	BRB-TNTK	Brushed Nickel	8	$127
	BRB-TNTB	Matte Black	8	$142
	BRB-TNTBG	Brushed Gold	8	$155

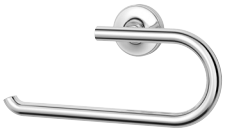

Holes: · 1-Hole Installation

Features:
· Premium Metal Construction
· Superior Mounting Posts
· Concealed Screw Installation
· Mounting Hardware Included

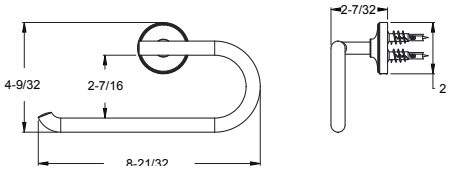

Paper Holder

Model	Finish	Case Qty	List Price
BPH-TNTC	Polished Chrome	8	$111
BPH-TNTK	Brushed Nickel	8	$133
BPH-TNTB	Matte Black	8	$145
BPH-TNTBG	Brushed Gold	8	$159

Technical Info

Holes: · 2-Hole Installation

Features:
· Premium Metal Construction
· Pivot Swing Paper Mount
· Concealed Screw Installation
· Mounting Hardware Included

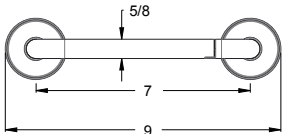

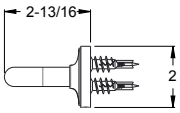

Robe Hook

BRH-TNTC	Polished Chrome	12	$76
BRH-TNTK	Brushed Nickel	12	$89
BRH-TNTB	Matte Black	12	$105
BRH-TNTBG	Brushed Gold	12	$117

Holes: · 1-Hole Installation

Features:
· Premium Metal Construction
· Superior Mounting Posts
· Concealed Screw Installation
· Mounting Hardware Included

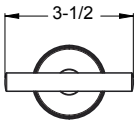

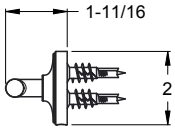

18" Towel Bar

Model	Finish	Case Qty	List Price
BTB-TB1C	Polished Chrome	3	$127
BTB-TB1K	Brushed Nickel	3	$145
BTB-TB1D	Polished Nickel	3	$144
BTB-TB1BG	Brushed Gold	3	$150

Technical Info

Holes: · 2-Hole

Features:
- All Metal Construction
- Superior Mounting Bracket
- Concealed Screw Installation
- Mounting Hardware Included

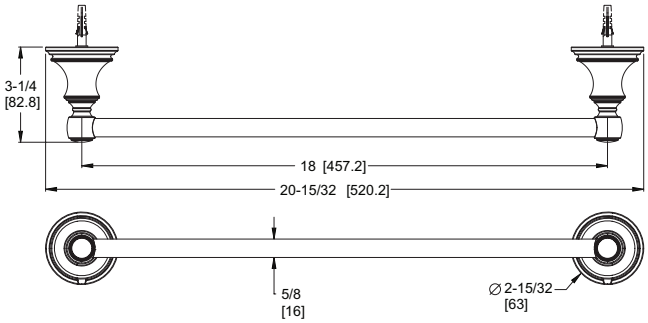

24" Towel Bar

BTB-TB2C	Polished Chrome	3	$149
BTB-TB2K	Brushed Nickel	3	$167
BTB-TB2D	Polished Nickel	3	$167
BTB-TB2BG	Brushed Gold	3	$189

Holes: · 2-Hole

Features:
- All Metal Construction
- Superior Mounting Bracket
- Concealed Screw Installation
- Mounting Hardware Included

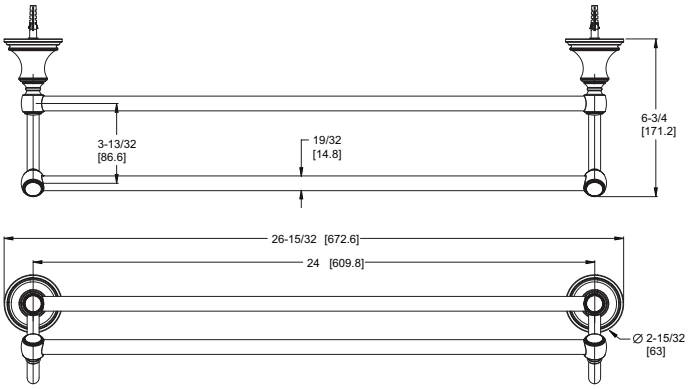

24" Towel Rack

BTR-TB2C	Polished Chrome	3	$492
BTR-TB2K	Brushed Nickel	3	$566
BTR-TB2D	Polished Nickel	3	$566
BTR-TB2BG	Brushed Gold	3	$598

Holes: · 2-Hole

Features:
- All Metal Construction
- Superior Mounting Bracket
- Concealed Screw Installation
- Mounting Hardware Included

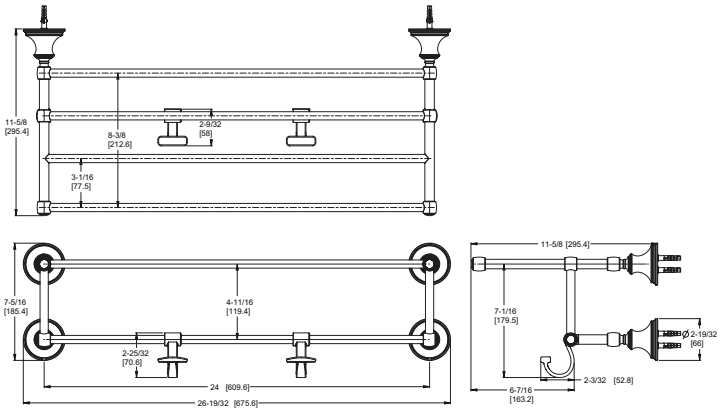

Towel Ring

Model	Finish	Case Qty	List Price
BRB-TBØC	Polished Chrome	3	$98
BRB-TBØK	Brushed Nickel	3	$112
BRB-TBØD	Polished Nickel	3	$111
BRB-TBØBG	Brushed Gold	3	$135

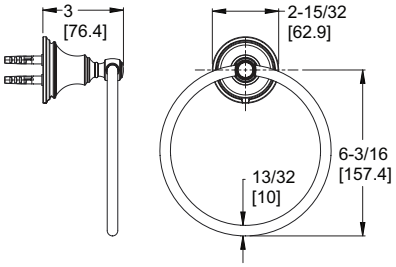

Technical Info

Holes: · 1-Hole

Features:
· All Metal Construction
· Superior Mounting Bracket
· Concealed Screw Installation
· Mounting Hardware Included

Paper Holder

BPH-TBØC	Polished Chrome	3	$98
BPH-TBØK	Brushed Nickel	3	$136
BPH-TBØD	Polished Nickel	3	$135
BPH-TBØBG	Brushed Gold	3	$149

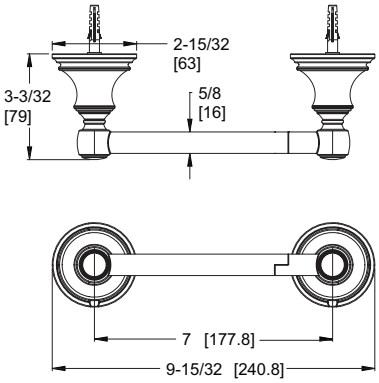

Holes: · 1-Hole

Features:
· Swivel Mount Paper Holder
· All Metal Construction
· Superior Mounting Bracket
· Concealed Screw Installation
· Mounting Hardware Included

Robe Hook

BRH-TBØC	Polished Chrome	3	$49
BRH-TBØK	Brushed Nickel	3	$57
BRH-TBØD	Polished Nickel	3	$57
BRH-TBØBG	Brushed Gold	3	$68

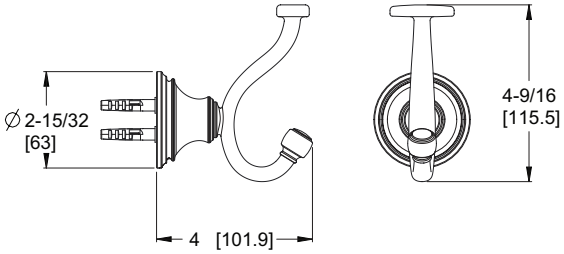

Holes: · 1-Hole

Features:
· All Metal Construction
· Superior Mounting Bracket
· Concealed Screw Installation
· Mounting Hardware Included

Valves

Sure, they go behind the wall. But that doesn't mean your tub and shower valves aren't critical. Selecting the right valves comes down to your plumbing setup. From single-handle and multi-handle tub and shower valves, to diverter valves for hand held showers and body sprays, and a choice between pressure-balanced and thermostatic, you'll find a range of Pfister valves to meet your needs.

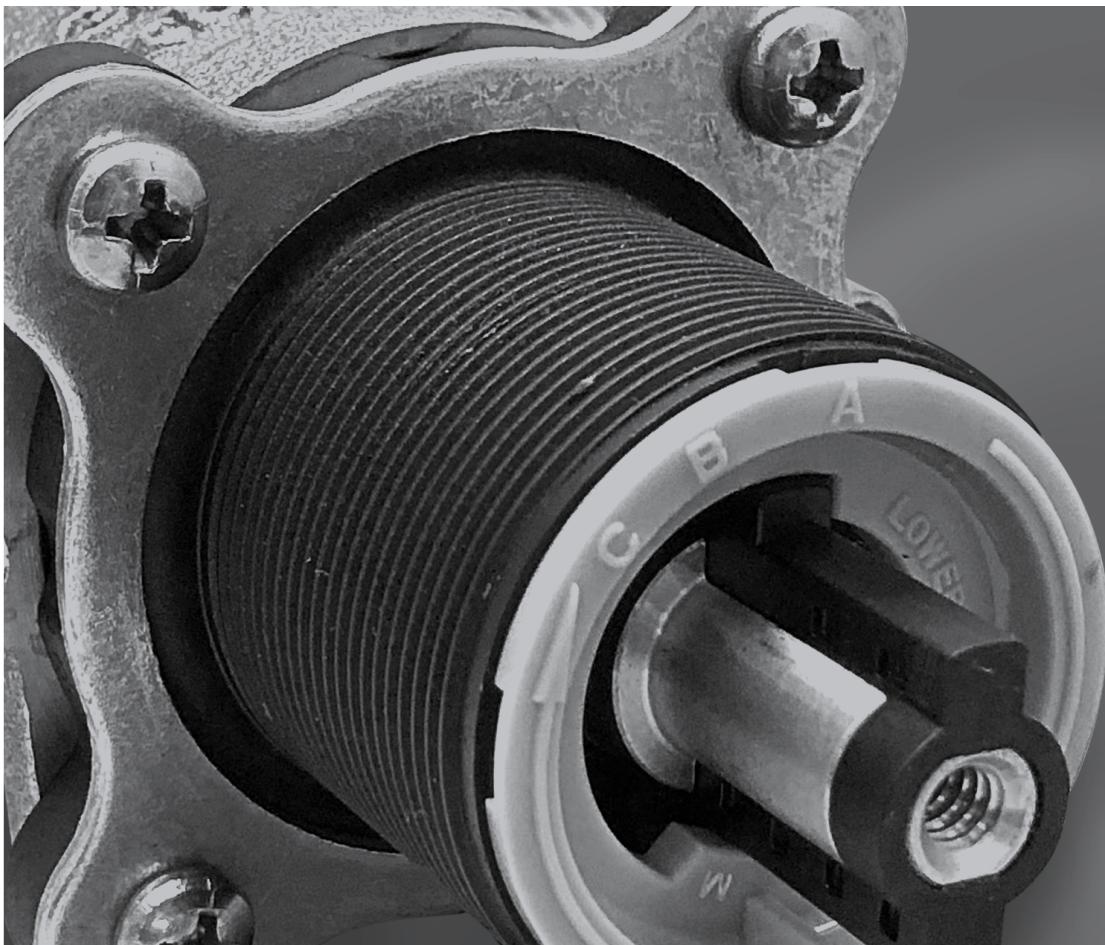

How to Order a Wall Mount Faucet

Rough-In
Choose the desired rough-in valve

Trim
Select trim

Complete Faucet

	Model	Description	Case Qty	List Price
Universal Wall Mount Rough Valve ★	LØW8-Ø1ØØ	N/A	3	$205

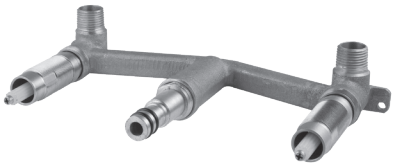

Technical Info

Holes: · 3-Hole 8" Installation

Features:
- Ceramic Disc Valves
- 11/16" Installation Depth Adjustability
- 8" Fixed Body
- 1.2 gpm @ 60 psi

Must Order Trim Separately

	Model	Description	Case Qty	List Price
Universal Wall Mount Rough Valve ★	LØW8-Ø2ØØ	N/A	3	$287

Technical Info

Holes: · 3-Hole 8" Installation

Features:
- Ceramic Disc Valves
- 11/16" Installation Depth Adjustability
- 8" Fixed Body
- 1.2 gpm @ 60 psi

Must Order Trim Separately
For Tenet Wall Mount Model Only

★ Core Offering

How to Order a Pressure Balance Tub & Shower

PermaBalance™ Tub & Shower Rough Valve

	Model	Description	Case Qty	List Price
★	ØX8-31ØA	No Stop	4	$138
★	JX8-31ØA	Job Pack	12	$127
★	ØX8-34ØA	With Stops	4	$168
★	JX8-34ØA	Job Pack w/Stops	12	$158

Retrofittable Metal Stem Cartridge Fits Into Existing Valve Bodies

Technical Info

Features:
- Rough-In Valve and Pressure Balance Cartridge
- Ceramic Disc Valves
- 1/2" Universal Inlets to Accept 1/2" Copper, 1/2" Iron Pipe, PEX or CPVC Adapters
- Back-to-Back Compatible
- JX= Job Pack Quantity Ships in Master Carton of 12
- 34ØA= with Screwdriver Stops

PermaBalance™ Tub & Shower Rough PEX Ready Valve

★	JX8-31ØP	Job Pack	12	$127
★	JX8-34ØP	Job Pack w/Stops	12	$157

Retrofittable Metal Stem Cartridge Fits Into Existing Valve Bodies

This Valve Complies With Astfm F1807 and CSA B137.5 and Is to Be Used with The Sdr9 Pex Tubing Using the Crimp Ring System of Joining. It Cannot Be Used with Cold Expansion Fittings and Joining System.

Features:
- Rough-In Valve and Pressure Balance Cartridge
- Ceramic Disc Valve
- 1/2" PEX Inlets and Universal Male Threaded Outlets
- Back-to-Back Compatible
- JX= Job Pack Quantity Ships In Master Carton of 12
- 34ØP= With Screwdriver Stops

★ Core Offering

PermaBalance™ Tub & Shower Rough PEX Ready Valve

	Model	Description	Case Qty	List Price
★	JX8-41ØP	Job Pack	12	$127
★	JX8-44ØP	Job Pack w/Stops	12	$157

1/2" Cold Expansion PEX Inlets

Retrofittable Metal Stem Cartridge Fits Into Existing Valve Bodies

Technical Info

Features:
- Rough-In Valve and Pressure Balance Cartridge
- Ceramic Disc Valve
- 1/2" PEX Inlets and Universal Male Threaded Outlets
- Back-to-Back Compatible
- JX= Job Pack Quantity Ships in Master Carton of 12
- 44ØP= with Screwdriver Stops

PermaBalance™ 0X8 Cartridge

	974-5299	No Stop	1	$45

Features:
- Pressure Balance Cartridge
- Ceramic Disc Valve
- Can Be Used with VB8 & JV8 Valve Bodies
- Metal Stem
- Includes adapter for legacy valve castings

PermaBalance™ Deep Casting Valve Cartridge

★	974-Ø42Ø	No Stop	1	$67

Features:
- Pressure Balance Cartridge
- Ceramic Disc Valve
- Can Be Used with VB8 & JV8 Valve Bodies
- Metal Stem
- Includes adapter for legacy valve castings

★ Core Offering

How to Order a Diverter

Rough-In
Choose the desired rough-in valve

+

Trim
Select trim

=

Complete Diverter

	Model	Description	Case Qty	List Price
Non Shared 3 Way Diverter Valve	Ø15-3WDNS	Diverter Valve	4	$180
6 Way Shared Diverter Valve ★	Ø15-6WDS	Diverter Valve	4	$140
Non-Shared Stacked 3-Way Diverter Valve ★	Ø15-3WDNSS	3 Way, 5 Port Non-Shared		$344
Shared Stacked 6-Way Diverter Valve ★	Ø15-6WDSS	6 way, 5 Port Shared		$344

Non Shared 3 Way Diverter Valve

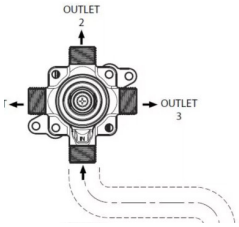

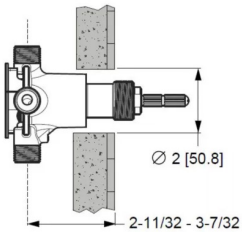

Features:
- 4 ports, 3 way Non-Shared Diverter
- Ceramic Disc Cartridge
- 1/2" Male IP Common Threads
- No shared Functionality
- Install Depth 3/732 to Centerline Connection
- Functionality for up to 3 devices
- Extension Kit 9951-3549
- 16 Series Diverter Trim Sold Separately

6 Way Shared Diverter Valve

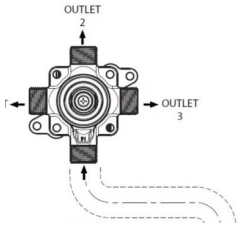

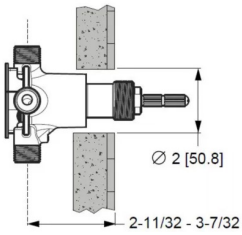

Features:
- 4 ports, 6 way Shared Diverter
- Ceramic Disc Cartridge
- 1/2" Male IP Common Threads
- Shared Functionality for up to 2 devices simultaneously
- Install Depth 2 11/32 - 3 7/32" to Centerline Connection
- Extension Kit 951-3549
- 16 Series Diverter Trim Sold Separately

Non-Shared Stacked 3-Way Diverter Valve

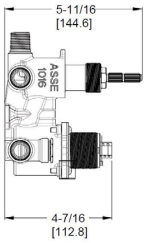

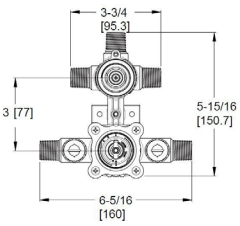

Features:
- All Metal Construction
- 3 Way Stacked Diverter
- Non-Shared Functionality
- Ceramic Disc Cartridge
- R89 Series Trim Sold Separately
- Dual 1/2" I.P. or 1/2" Copper Sweat Connections
- Integral Stops
- Temperature Limit Stop Included
- Anti-Scald Shower Cartridge
- Spool Pressure Balance Valve
- Optional 7/8" Extension Kit 951-3649 Available, Order Separately

Shared Stacked 6-Way Diverter Valve

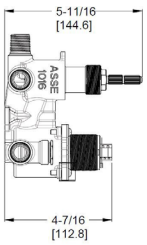

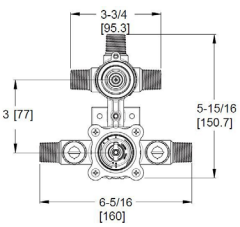

Features:
- All Metal Construction
- 6 Way Stacked Diverter
- Shared Functionality
- Ceramic Disc Cartridge
- R89 Series Trim Sold Separately
- Dual 1/2" I.P. or 1/2" Copper Sweat Connections
- Integral Stops
- Temperature Limit Stop Included
- Anti-Scald Shower Cartridge
- Spool Pressure Balance Valve
- Optional 7/8" Extension Kit 951-3649 Available, Order Separately

★ Core Offering

How to Order a Roman Tub Faucet

Rough-In
Choose the desired rough-in valve

+

Trim
Select trim

=

Complete Tub Filler

Valves

	Model	Description	Case Qty	List Price
Universal Roman Tub Valve Rough	★ ØX6-Ø5ØR	Single Pack	4	$183
	★ JX6-Ø5ØR	Job Pack	12	$178

Technical Info

Holes: · 3-Hole 10" Installation

Dims: · 1 3/8" Max Deck Thickness

Features:
- Rough-In Valve Body & Cartridge
- Ceramic Disc Valve
- 10" Fixed Valve Body
- Thin and Thick Deck Mounting Hardware
- Order 974-375 1" Extension Kit if Deck Thickness Exceeds 1 3/8", Requires 1 Kit Per Handle, Stackable to Reach Desired Height up to 4 1/2"
- Order 975-015 extended spout shank for 4 1/2" of useable height
- 1/2" Sweat Inlets
- JX= Job Pack Quantity Ships in Master Carton of 12
- 15 - 18 gpm @ 60 psi

	Model	Description	Case Qty	List Price
Universal Adjustable Roman Tub Valve Rough	★ ØX6-15ØR	Single Pack	3	$172
	★ JX6-15ØR	Job Pack	12	$164

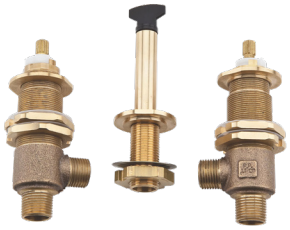

Holes: · 3-Hole Installation

Dims: · 1 3/8" Max Deck Thickness

Features:
- Rough-In Valve Body & Cartridge
- Ceramic Disc Valve
- Adjustable Installation
- Thin and Thick Deck Mounting Hardware
- Order 974-375 1" Extension Kit if Deck Thickness Exceeds 1 3/8", Requires 1 Kit Per Handle, Stackable to Reach Desired Height up to 4 1/2"
- Order 975-015 extended spout shank for 4 1/2" of useable height
- 1/2" Universal IP Male Threaded Inlets and 1/2" IPS Male Threaded Outlets
- JX= Job Pack Quantity Ships in Master Carton of 12
- 15 - 18 gpm @ 60 psi

	Model	Description	Case Qty	List Price
Universal Adjustable Roman Tub Valve and Hand Shower Rough	ØX6-44ØR	4-Hole Valve	3	$384

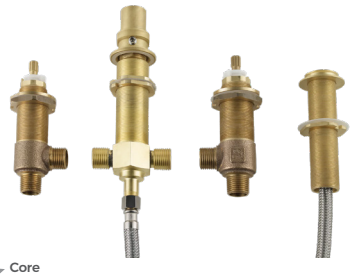

Holes: · 4-Hole 4 1/2–28" Installation

Dims: · 1 3/8" Max Deck Thickness

Features:
- Rough-In Valve Body & Cartridge
- Ceramic Disc Valve
- Adjustable Installation
- Thin and Thick Deck Mounting Hardware
- Order 974-375 1" Extension Kit if Deck Thickness Exceeds 1 3/8", Requires 1 Kit Per Handle, Stackable to Reach Desired Height up to 4 1/2"
- 1/2" Universal Male IP Threaded Inlets and 1/2" IPS Male Threaded Outlets
- 13 gpm @ 60 psi

★ Core Offering

KITCHEN
RETAIL

TECHNOLOGY
Electronic

Raya with REACT™
Page R-6

PULL-DOWNS

Antrom
Page R-7

Avanti™
Page R-7

Cagney®
Page R-7

Classic
Page R-8

Fullerton®
Page R-8

Indira
Page R-8

Jovi
Page R-9

Kedzie
Page R-9

Kroft
Page R-9

Ladera
Page R-10

Masey
Page R-10

Miri
Page R-10

Mystique®
Page R-11

Rancho
Page R-11

Raya®
Page R-11

Raya® Culinary
Page R-12

Renato
Page R-12

Seahaven
Page R-12

Tegley
Page R-13

Wheaton®
Page R-13

Wray
Page R-13

Zanna
Page R-14

KITCHEN
RETAIL

PULL-OUTS

Corvo®
Page R-15

Shelton®
Page R-15

Vorena
Page R-15

Wray
Page R-16

SINGLE CONTROL

Classic®
Page R-17

BATH
RETAIL

SINGLE CONTROL

Aliante®
Page R-20

Ashfield®
Page R-20

Auden®
Page R-20

Bloor
Page R-21

Breckenridge®
Page R-21

Bruxie
Page R-21

Ferris
Page R-22

Fullerton®
Page R-22

Jaida®
Page R-22

Kamato®
Page R-23

Karci
Page R-23

Ladera
Page R-23

Leen
Page R-24

Matlock
Page R-24

Parisa®
Page R-24

Pasadena®
Page R-25

Penn
Page R-25

Rancho
Page R-25

Selia®
Page R-26

Vega®
Page R-26

Venturi
Page R-26

Verano®
Page R-27

Zeelan
Page R-27

BATH
RETAIL

TWO HANDLE 4" CENTRESET

Bruxie
Page R-28

Classic®
Page R-28

Courant
Page R-28

Fullerton
Page R-29

Halifax®
Page R-29

Henlow®
Page R-29

Karci
Page R-30

Masey®
Page R-30

Pasadena®
Page R-30

Penn
Page R-31

Rancho
Page R-31

Sonterra®
Page R-31

Vedra
Page R-32

Venturi
Page R-32

TWO HANDLE 8" WIDESPREAD

Ashfield®
Page R-33

Auden®
Page R-33

Breckenridge®
Page R-33

Bruxie
Page R-34

Karci
Page R-34

Ladera
Page R-34

Masey®
Page R-35

Pasadena®
Page R-35

Penn
Page R-35

Sonterra
Page R-36

Venturi
Page R-36

Kitchen

	Model	Finish	Case Qty	List Price
Raya with REACT™ Single-Handle Electronic Pull-Down Kitchen Faucet with React Technology	F529ERYGS	Spot Defense	2	$603.00

Technical Info

Holes:
- 1, 2, 3, or 4-Hole Installation

Dims:
- 16 27/32" Spout Height
- 8 27/32" Deck to Aerator
- 8 13/16" Spout Reach
- 3" Max Deck Thickness

Features:
- React - convenient touch-free response activated technology within 3" of sensor
- SmartStop - automatically shuts off the faucet after 3 minutes of inactivity
- Manual override - use the handle to operate the faucet at any time
- Forward-only handle
- Low Battery Indicator
- 4AA batteries included
- Pforever Seal™ Ceramic Disc Valve
- Installs with or without deckplat (included)
- Spot Defense finish
- 1.8 GPM Flow Rate

CEC Compliant | Cal Green Compliant | NSF Lead-Free Certified | ADA Compliant | Accudock™

	Model	Finish	Case Qty	List Price
Antrom Single-Handle Kitchen Faucet with Soap Dispenser	F5297AOGS	Spot Defense	3	$399.00

Technical Info

Holes: • 1, 2, 3 or 4-Hole Installation

Dims:
- 15-1/2" Spout Height
- 8-9/32" Deck to Aerator
- 8-7/16" Spout Reach
- 3" Maximum Deck Thickness

Features:
- 2-function sprayhead
- Accudock™ sprayhead
- Quick Install Tool
- Pfast-Connect™
- Spot-Defense Finish
- Solotilt™ One handed Soap Dispenser
- Forward-only handle
- Installs with or without deckplate (included)
- Pforever Seal™ Ceramic Disc Valve
- 1.8 GPM Flow Rate

Avanti™ Single-Handle Pull-Down Kitchen Faucet with Soap Dispenser	LF5297ANS	Stainless Steel	1	$302.00

Holes: • 1 or 3-Hole Installation

Dims:
- 15 5/8" Spout Height
- 10 17/32" Deck to Aerator
- 7 9/32" Spout Reach
- 2 1/4" Max Deck Thickness

Features:
- 2-Function Sprayhead
- Quick Install Tool
- Pfast Connect™
- Installs with or without deckplate (included)
- Pforever Seal™ Ceramic Disc Valve
- 1.8 GPM Flow Rate

Cagney® Single-Handle Pull-Down Kitchen Faucet with Soap Dispenser	FWKP400B	Matte Black	3	$311.00

Holes: • 1, 2, 3 or 4-Hole Installation

Dims:
- 16 1/8" Spout Height
- 8 7/32" Deck to Aerator
- 9 1/16" Spout Reach
- 2" Maximum Deck Thickness

Features:
- AccuDock™ sprayhead
- 3-Function Pull-Down Sprayhead
- Quick Install Tool
- Pfast Connect™
- Installs with or without deckplate (included)
- Pforever Seal™ Ceramic Disc Valve
- 1.8 GPM Flow Rate

CEC Compliant | Cal Green Compliant | NSF Lead-Free Certified | ADA Compliant | Accudock™

Classic
Single Handle Pull Down Kitchen Faucet

Model	Finish	Case Qty	List Price
F5297PFC	Polished Chrome	3	$278.00
F5297PFS	Stainless Steel	3	$294.00
F5297PFB	Matte Black	3	$314.00

Technical Info

Holes:
- 1 or 3-Hole Installation

Dims:
- 16 1/8" Spout Height
- 8 7/36" Deck to Aerator
- 9 1/16" Spout Reach
- 2 1/4" Max Deck Thickness

Features:
- 3-Function Pull-Down Sprayhead
- Pfast Connect™
- Quick Install Tool
- Forward-only handle
- Installs with or without deckplate (included)
- Pforever Seal™ Ceramic Disc Valve
- 1.8 GPM Flow Rate

Fullerton®
Single-Handle Pull-Down Kitchen Faucet

F5297FTC	Polished Chrome	3	$346.00
F5297FTS	Stainless Steel	3	$389.00
F5297FTB	Matte Black	3	$455.00
F5297FTBG	Brushed Gold	3	$482.00

Holes:
- 1 or 3 Hole Installation

Dims:
- 16 3/8" Spout Height
- 8 7/16" Deck to Aerator
- 9" Spout Reach
- 3" Max Deck Thickness

Features:
- 3-Function Sprayhead
- AccuDock™ sprayhead
- Pforever Seal™ Ceramic Disc Valve
- Installs with or without deckplate (included)
- 1.8 GPM Flow Rate

Indira
Single-Handle Pull-Down Kitchen Faucet

F5297NDC	Polished Chrome	3	$475.00
F5297NDGS	Spot Defense	3	$550.00

Holes:
- 1 or 3 Hole Installation

Dims:
- 16 3/8" Spout Height
- 8 7/16" Deck to Aerator
- 9" Spout Reach
- 3" Max Deck Thickness

Features:
- 3-Function Sprayhead
- AccuDock™ sprayhead
- Pforever Seal™ Ceramic Disc Valve
- Installs with or without deckplate (included)
- 1.8 GPM Flow Rate

CEC Compliant | Cal Green Compliant | NSF Lead-Free Certified | ADA Compliant | Accudock™

	Model	Finish	Case Qty	List Price
Jovi Single-Handle Pull-Down Kitchen Faucet with Soap Dispenser	F5297JIGS	Spot Defense	3	$371.00

Technical Info

Holes: • 1, 2, 3 or 4-Hole Installation

Dims:
- 15-1/8" Spout Height
- 10-1/8" Deck to Aerator
- 8-25/32" Spout Reach
- 2-1/8" Maximum Deck Thickness

Features:
- 2-function sprayhead
- Accudock™ Sprayhead
- Forward-only handle
- Pfast-Connect™
- Quick-Install Tool
- Solotilt™ One handed Soap Dispenser
- Installs with or without deckplate (included)
- Pforever Seal™ Ceramic Disc Valve
- Spot-Defense Finish
- 1.8 GPM Flow Rate

Kedzie Single-Handle Pull-Down Kitchen Faucet with Soap Dispenser	F5297KZS	Stainless Steel	1	$376.00

Holes: • 1, 2, 3 or 4-Hole Installation

Dims:
- 16 5/32" Spout Height
- 8" Deck to Aerator
- 9 3/32" Spout Reach
- 2 3/8" Maximum Deck Thickness

Features:
- 2-Function Sprayhead
- Autodock™ Sprayhead
- TiteSeal™ Deckplate
- Quick Install Tool
- Pfast Connect™
- Installs with or without deckplate (included)
- Pforever Seal™ Ceramic Disc Valve
- 1.8 GPM Flow Rate

Kroft Single-Handle Pull-Down Kitchen Faucet with Soap Dispenser	F5297KFGS	Spot Defense	3	$384.00

Holes: • 1, 2, 3, or 4-Hole Installation

Dims:
- 15-13/32" Spout Height
- 8-13/32" Deck to Aerator
- 8-1/32" Spout Reach
- 3" Maximum Deck Thickness

Features:
- 2-function sprayhead
- Accudock™ sprayhead
- Titeseal™ Deckplate
- Forward-only handle
- Pfast Connect™
- Quick-Install Tool
- Solotilt™ One Handed Soap Dispenser
- Installs with or without deckplate (included)
- Pforever Seal™ Ceramic Disc Valve
- Spot Defense Finish (GS Finish Only)
- 1.8 GPM Flow Rate

CEC Compliant | Cal Green Compliant | NSF Lead-Free Certified | ADA Compliant | Accudock™

Ladera *

Single-Handle Pull-Down Kitchen Faucet with Soap Dispenser

Model	Finish	Case Qty	List Price
F5297LRRGS	Spot Defense	1	$373.00

Technical Info

Holes: • 1, 2, 3 or 4-Hole Installation

Dims:
- 15-9/16" Spout Height
- 9-3/4" Deck to Aerator
- 9-1/32" Spout Reach
- 3" Maximum Deck Thickness

Features:
- MagnePfit™ Sprayhead
- Auto-Align™ Docking
- 3-function Sprayhead
- Top Pfit™ Installation
- Forward-only handle
- Titeseal™ Deckplate
- Pfast Connect™
- Quick-Install Tool
- Solotilt™ One Handed Soap Dispenser
- nstalls with or without deckplate (included)
- Pforever Seal™ Ceramic Disc Valve
- Spot-Defense Finish
- 1.8 GPM Flow Rate

Masey

Single-Handle Pull-Down Kitchen Faucet with Soap Dispenser

F5297MCC	Polished Chrome	3	$301.00
F5297MSS	Stainless Steel	3	$334.00

Holes: • 1, 2, 3, or 4-Hole Installation

Dims:
- 14-9/16" Spout Height
- 8-23/32" Deck to Aerator
- 9-1/32" Spout Reach
- 3" Maximum Deck Thickness

Features:
- 2-function sprayhead
- Accudock™ Sprayhead
- Forward-only handle
- Pfast Connect™
- Quick-Install Tool
- Titeseal™ Deckplate
- Pforever Seal™ ceramic disc valve
- Installs with or without deckplate (included)
- 1.8 GPM Flow Rate

Miri

Single-Handle Pull-Down Kitchen Faucet with Soap Dispenser

F5297MRGS	Spot Defense	3	$378.00

Holes: • 1, 2, 3 or 4-Hole Installation

Dims:
- 16-1/8" Spout Height
- 8-15/16" Deck to Aerator
- 8-13/16" Spout Reach
- 3" Maximum Deck Thickness

Features:
- 2-function sprayhead
- Top Pfit™ Installation
- Accudock™ Sprayhead
- Forward-only handle
- Titeseal Deckplate
- Pfast Connect™
- Quick-Install Tool
- Solotilt™ One Handed Soap Dispenser
- Installs with or without deckplate (included)
- Pforever Seal™ Ceramic Disc Valve
- Spot-Defense Finish
- 1.8 GPM Flow Rate

* Retailer exclusive product, available for special order only.

CEC Compliant | Cal Green Compliant | NSF Lead-Free Certified | ADA Compliant | Accudock™

Mystique®
Single-Handle Pull-Down Kitchen Faucet with Soap Dispenser

Model	Finish	Case Qty	List Price
LF5297MDS	Stainless Steel	3	$427.00

Technical Info

Holes: • 1, 2, 3 or 4-Hole Installation

Dims:
- 17 3/16" Spout Height
- 8 1/4" Deck to Aerator
- 8" Spout Reach
- 2 1/4" Maximum Deck Thickness

Features:
- 3 Function Sprayhead
- Pfast Connect™
- Pforever Seal™ Ceramic Disc Valve
- Quick-Install Tool
- Installs with or without deckplate (included)
- 1.8 GPM Flow Rate

Rancho
Single-Handle Pull-Down Kitchen Faucet with Soap Dispenser

F5297RCHC	Polished Chrome	3	$342.00
F5297RCHGS	Spot Defense	3	$372.00
F5297RCHB	Matte Black	3	$402.00
F5297RCHBG	Brushed Gold	3	$432.00

Holes: • 1, 2, 3 or 4-Hole Installation

Dims:
- 15" Spout Height
- 9" Deck to Aerator
- 9 1/16" Spout Reach
- 3" Maximum Deck Thickness

Features:
- MagnePfit™ Sprayhead
- Auto-Align™ Docking
- 3-function sprayhead
- Top Pfit™ Installation
- Forward-only handle
- Titeseal™ Deckplate
- Pfast Connect™
- Quick-Install Tool
- Solotilt™ One Handed Soap Dispenser
- Installs with or without deckplate (included)
- Pforever Seal™ Ceramic Disc Valve
- Spot-Defense Finish
- 1.8 GPM Flow Rate

Raya®
Single-Handle Pull-Down Kitchen Faucet with Soap Dispenser

F5297RYS	Stainless Steel	2	$342.00
F5297RYB	Matte Black	2	$367.00

Holes: • 1, 2, 3 or 4-Hole Installation

Dims:
- 16 27/32" Spout Height
- 9 27/32" Deck to Aerator
- 8 13/16" Spout Reach
- 3" Maximum Deck Thickness

Features:
- 3-Function Sprayhead
- AccuDock™ Sprayhead
- TiteSeal™ Deckplate
- Quick Install Tool
- Pfast Connect™
- Installs with or without deckplate (included)
- Pforever Seal™ Ceramic Disc Valve
- 1.8 GPM Flow Rate

CEC Compliant | Cal Green Compliant | NSF Lead-Free Certified | ADA Compliant | Accudock™

Raya® Culinary
Single-Handle Pull-Down Kitchen Faucet with Soap Dispenser

Model	Finish	Case Qty	List Price
F5297RYCC	Polished Chrome	3	$364.00
F5297RYCGS	Spot Defense	3	$398.00
F5297RYCB	Matte Black	3	$425.00

Technical Info

Holes: • 1, 2, 3 or 4-Hole Installation

Dims:
- 19" Spout Height
- 7 11/16" Deck to Aerator
- 8 27/32" Spout Reach
- 3" Maximum Deck Thickness

Features:
- 3-function sprayhead
- Top Pfit™ Installation
- Accudock™ sprayhead
- Forward-only handle
- Titeseal™ Deckplate
- Pfast Connect™
- Quick-Install Tool
- Solotilt™ One Handed Soap
- Dispenser
- Installs with or without deckplate (included)
- Pforever Seal™ Ceramic Disc Valve
- Spot-Defense Finish
- 1.8 GPM Flow Rate

Renato
Single-Handle Pull-Down Kitchen Faucet with Soap Dispenser

F5297RNC	Polished Chrome	3	$281.00

Holes: • 1, 2, 3 or 4-Hole Installation

Dims:
- 14 1/2" Spout Height
- 7 1/16" Deck to Aerator
- 9 1/8" Spout Reach
- 3" Maximum Deck Thickness

Features:
- 3-function sprayhead
- Forward-only handle
- Titeseal™ Deckplate
- Pfast Connect™
- Quick-Install Tool
- Soap pump included
- Installs with or without deckplate (included)
- Pforever Seal™ Ceramic Disc Valve
- 1.8 GPM Flow Rate

Seahaven *
Single-Handle Pull-Down Kitchen Faucet with Soap Dispenser

F5297SVNC	Polished Chrome	3	$351.00
F5297SVNGS	Spot Defense	3	$397.00
F5297SVNB	Matte Black	3	$429.00

Holes: • 1, 2, 3 or 4-Hole Installation

Dims:
- 16 27/32" Spout Height
- 9 27/32" Deck to Aerator
- 8 13/16" Spout Reach
- 3" Maximum Deck Thickness

Features:
- • MagnePfit™ Sprayhead
- • AutoAlign™ Docking
- TopPfit™ Installation
- 2-Function Sprayhead
- TiteSeal™ Deckplate
- Quick Install Tool
- Pfast Connect™
- Installs with or without deckplate (included)
- Solotilt™ One handed Soap
- Forward-only handle
- Spot-Defense Finish
- Pforever Seal™ Ceramic Disc Valve
- 1.8 GPM Flow Rate

* Retailer exclusive product, available for special order only.

CEC Compliant | Cal Green Compliant | NSF Lead-Free Certified | ADA Compliant | Accudock™

Tegley
Single-Handle Pull-Down Kitchen Faucet with Soap Dispenser

Model	Finish	Case Qty	List Price
F5297TGS	Stainless Steel	3	$344

Technical Info

Holes: • 1, 2, 3 or 4-Hole Installation

Dims:
- •14 25/32" Spout Height
- 7 31/32" Deck to Aerator
- 8 1/4" Spout Reach
- 3" Maximum Deck Thickness

Features:
- 2-function sprayhead
- Titeseal™ Deckplate
- Pfast Connect™
- Soap pump included
- Installs with or without deckplate (included)
- Pforever Seal™ Ceramic Disc Valve
- 1.8 GPM Flow Rate

Wheaton®
Single-Handle Pull-Down Kitchen Faucet with Soap Dispenser

F5297WHY	Tuscan Bronze	3	$399.00

Holes: • 1, 2, 3 or 4-Hole Installation

Dims:
- 17 5/16" Spout Height
- 9" Deck to Aerator
- 9 5/16" Spout Reach
- 3" Maximum Deck Thickness

Features:
- 2-Function Sprayhead
- AccuDock™ Sprayhead
- Pforever Seal™ Ceramic Disc Valve
- Quick Install Tool
- Installs with or without deckplate (included)
- 1.8 GPM Flow Rate

Wray® *
Single-Handle Pull-Down Kitchen Faucet with Soap Dispenser

F5297WRYGS	Spot Defense	1	$408.00
F5297WRYB	Matte Black	1	$443.00

Holes: • 1, 2, 3 or 4-Hole Installation

Dims:
- 15 9/16" Spout Height
- 8 3/16" Deck to Aerator
- 8 3/4" Spout Reach
- 3" Maximum Deck Thickness

Features:
- MagnePfit™ Sprayhead
- AutoAlign™ Docking
- HydroBlade™ Spray Technology
- TopPfit™ Installation
- 3-Function Sprayhead
- TiteSeal™ Deckplate
- Quick Install Tool
- Pfast Connect™
- Installs with or without deckplate (included)
- Solotilt™ One handed Soap
- Forward-only handle
- Spot-Defense Finish
- Pforever Seal™ Ceramic Disc Valve
- 1.8 GPM Flow Rate

* Retailer exclusive product, available for special order only.

CEC Compliant | Cal Green Compliant | NSF Lead-Free Certified | ADA Compliant | Accudock™

Zanna *

Single-Handle Pull-Down Kitchen Faucet

Model	Finish	Case Qty	List Price
F5297ZNRC	Polished Chrome	3	$348.00
F5297ZNRGS	Spot Defense	3	$376.00
F5297ZNRB	Matte Black	3	$464.00
F5297ZNRBG	Brushed Gold	3	$515.00

Technical Info

Holes:
- 1, 2, 3 or 4-Hole Installation

Dims:
- 15-15/16" Spout Height
- 8-7/8" Deck to Aerator
- 9-1/8" Spout Reach
- 3" Maximum Deck Thickness

Features:
- MagnePfit™ Sprayhead
- 3-function sprayhead
- Quick-Install Tool
- Titeseal™ Deckplate
- Spot Defense Finish (GS Finish Only)
- Pforever Seal™ Ceramic Disc Valve
- Installs with or without deckplate (included)
- Pfast Connect™
- Forward-only-handle
- 1.66 GPM Flow Rate

* Retailer exclusive product, available for special order only.

CEC Compliant | Cal Green Compliant | NSF Lead-Free Certified | ADA Compliant | Accudock™

Corvo®
Single Handle Pull-Out Faucet

Model	Finish	Case Qty	List Price
F5347CVS	Stainless Steel	3	$221.00

Technical Info

Holes: • 1, 2, 3 or 4-Hole Installation

Dims:
- 7 3/4" Spout Height
- 5 9/16" Deck to Aerator
- 9 5/32" Spout Reach
- 3" Max Deck Thickness

Features:
- 2-Function Sprayhead
- TiteSeal™ Deckplate
- Pfast Connect™
- Pforever Seal™ Ceramic Disc Valve
- Installs with or without deckplate (included)
- 1.8 GPM Flow Rate

Shelton®
Single Handle Pull-Out Faucet

FWKP701C	Polished Chrome	3	$145.00

Holes: • 1 or 3 hole Installation

Dims:
- 8 7/16" Spout Height
- 6" Deck to Aerator
- 8 11/16" Spout Reach
- 2" Max Deck Thickness

Features:
- 2-Function Pullout Sprayhead
- Quick Install Tool
- Pfast Connect™
- Pforever Seal™ Ceramic Disc Valve
- Installs with or without deckplate (included)
- 1.8 GPM Flow Rate

Vorena
Single Handle Pull-Out Faucet

F5347VOC	Polished Chrome	3	$332.00
F5347VOB	Matte Black	3	$413.00

Holes: • 1 or 3-Hole Installation

Dims:
- 12-3/32" Spout Height
- 10-19/32" Deck to Aerator
- 9-3/16" Spout Reach
- 3" Maximum Deck Thickness

Features:
- 2-function sprayhead
- Accudock™ Sprayhead
- Pfast-Connect™
- Pforever Seal™ Ceramic Disc Valve
- Quick-Install Tool
- Titeseal-Deckplate
- Forward-only Handle
- Installs with or without deckplate (included)
- 1.8 GPM Flow Rate

CEC Compliant | Cal Green Compliant | NSF Lead-Free Certified | ADA Compliant | Accudock™

	Model	Finish	Case Qty	List Price
Wray * Single Handle Pull-Out Faucet	F5347WRYC	Polished Chrome	1	$215.00
	F5347WRYGS	Spot Defense	1	$252.00

Technical Info

Holes:
- 1 or 3-Hole Installation

Dims:
- 7-7/16" Spout Height
- 5-5/8" Deck to Aerator
- 9" Spout Reach
- 3" Maximum Deck Thickness

Features:
- 2-function-spray-head
- Accudock™ Sprayhead
- Spot-Defense Finish
- Pfast-Connect™
- Titeseal™ Deckplate
- Quick-Install Tool
- Pforever Seal™ Ceramic Disc Valve
- Installs with or without deckplate
- (included)
- 1.8 GPM Flow Rate

* Retailer exclusive product, available for special order only.

CEC Compliant | Cal Green Compliant | NSF Lead-Free Certified | ADA Compliant | Accudock™

	Model	Finish	Case Qty	List Price
Classic® Single-Handle Kitchen Faucet	FWK1100C	Polished Chrome	3	$85.00

Technical Info

Holes:
- 3 Hole Installation

Dims:
- 7 19/32" Spout Height
- 5 31/32" Deck to Aerator
- 8 1/32" Spout Reach
- 1 1/14" Max Deck Thickness

Features:
- Spout swivels 360 degrees for maximum maneuverability
- 2.2 GPM Flow Rate

CEC Compliant | Cal Green Compliant | NSF Lead-Free Certified | ADA Compliant | Accudock™

Lavatory

Aliante®
Single Handle Centerset Lavatory Faucet

Model	Finish	Case Qty	List Price
LF042ATCC	Polished Chrome	3	$223.00

Technical Info

Holes: • 1 or 3-Hole 4" Installation

Dims:
- 6 13/16" Spout Height
- 3 23/32" Deck to Aerator
- 4 11/16" Spout Reach
- 3" Maximum Deck Thickness

Features:
- All Metal Construction
- Trough Spout
- Installs with or without deckplate (included)
- Pfast Connect™
- Push & Seal™ Drain
- TiteSeal™ Deckplate
- Pforever Seal™ Ceramic Disc Valve
- 1.2 GPM Flow Rate

Ashfield®
Single Handle Centerset Lavatory Faucet

LFM42YPKK	Brushed Nickel	1	$276.00
LFM42YPYY	Tuscan Bronze	1	$291.00
LF042YP0U	Rustic Bronze	1	$276.00

Holes: • 1 or 3-Hole 4" Installation

Dims:
- 1 7/8" Spout Height
- 4 1/2" Spout Reach
- 2 1/2" Maximum Deck Thickness

Features:
- Trough Spout
- Push & Seal™ Drain
- Installs with or without deckplate (included)
- Pfast Connect™
- Pforever Seal™ Ceramic Disc Valve
- 1.2 GPM Flow Rate

Auden®
Single Handle Centerset Lavatory Faucet

LF042ADGS	Spot Defense	3	$200.00
LF042ADYY	Tuscan Bronze	3	$228.00

Holes: • 1 or 3-Hole 4" Installation

Dims:
- 7 9/16" Spout Height
- 4 21/32" Deck to Spout
- 6 1/2" Spout Reach
- 3" Max Deck Thickness

Features:
- Push & Seal™ Drain
- Pforever Seal™ Ceramic Disc Valve
- TiteSeal™ Deckplate
- Pfast Connect™
- Spot Defense Finish (GS Finish Only)
- Installs with or without deckplate (included)
- 1.2 GPM Flow Rate

CEC Compliant | Cal Green Compliant | Meets EPA WaterSense | NSF Lead-Free Certified | ADA Compliant

Bloor *
Single Handle Centerset Lavatory Faucet

Model	Finish	Case Qty	List Price
LF042BLOB	Matte Black	3	$268.00
LF042BLOBG	Brushed Gold	3	$290.00

Technical Info

Holes: • 1 or 3-Hole 4" Installation

Dims:
- 7 1/16" Spout Height
- 3 3/4" Deck to Spout
- 4 9/16" Spout Reach
- 3" Max Deck Thickness

Features:
- Push & Seal™ Drain
- Pforever Seal™ Ceramic Disc Valve
- TiteSeal™ Deckplate
- Spot Defense Finish (GS Finish Only)
- Installs with or without deckplate (included)
- 1.2 GPM Flow Rate

Breckenridge®
Single Handle Centerset Lavatory Faucet

LF042BCBB	Matte Black	3	$293.00

Holes: • 1 or 3-Hole 4" Installation

Dims:
- 6 15/16" Spout Height
- 3 1/32" Deck to Spout
- 4 29/32" Spout Reach
- 3" Max Deck Thickness

Features:
- All metal construction
- Pforever Seal™ Ceramic Disc Valve
- Push & Seal™ Drain
- TiteSeal™ Deckplate
- Pfast Connect™
- Installs with or without deckplate (included)
- 1.2 GPM Flow Rate

Bruxie *
Single Handle Centerset Lavatory Faucet

LF042BIEBG	Brushed Gold	3	$240.00

* Home Depot Exclusive

Holes: • 1 or 3-Hole 4" Installation

Dims:
- 6 1/16" Spout Height
- 4 9/16" Deck to Spout
- 4 11/16" Spout Reach
- 3" Max Deck Thickness

Features:
- Pforever Seal™ Ceramic Disc Valve
- Push & Seal™ Drain
- TiteSeal™ Deckplate
- Pfast Connect™
- Installs with or without deckplate (included)
- 1.2 GPM Flow Rate

* Retailer exclusive product, available for special order only.

CEC Compliant | Cal Green Compliant | Meets EPA WaterSense | NSF Lead-Free Certified | ADA Compliant

Single Control Lavatory

Ferris *
Single Handle Centerset Lavatory Faucet

Model	Finish	Case Qty	List Price
LF042FERC	Polished Chrome	3	$207.00
LF042FERB	Matte Black	3	$243.00

Technical Info

Holes: • 1 or 3-Hole 4" Installation

Dims:
- 4 1/4" Spout Height
- 3 7/16" Deck to Aerator
- 4 13/32" Spout Reach
- 3" Maximum Deck Thickness

Features:
- Push & Seal™ Drain
- Pforever Seal™ Ceramic Disc Valve
- TiteSeal™ Deckplate
- Installs with or without deckplate (included)
- 1.2 GPM Flow Rate

Fullerton®
Single Handle Centerset Lavatory Faucet

F042FTCC	Polished Chrome	3	$139.00

Holes: • 1 or 3-Hole 4" Installation

Dims:
- 4 13/32" Spout Height
- 2 29/32" Deck to Aerator
- 4 23/32" Spout Reach
- 3" Maximum Deck Thickness

Features:
- All Metal Construction
- Pfast Connect™
- Push & Seal™ Drain
- TiteSeal™ Deckplate
- Pforever Seal™ Ceramic Disc Valve
- Installs with or without deckplate (included)
- 1.5 GPM Flow Rate

Jaida®
Single Handle Centerset Lavatory Faucet

LF042JDCC	Polished Chrome	3	$222.00
LF042JDKK	Brushed Nickel	3	$235.00
LF042JDYY	Tuscan Bronze	3	$274.00

Holes: • 1 or 3-Hole 4" Installation

Dims:
- 4 7/16" Spout Height
- 4 7/16" Spout Reach
- 3" Maximum Deck Thickness

Features:
- Trough Spout
- Pfast Connect™
- Push & Seal™ Drain
- Installs with or without deckplate (included)
- Pforever Seal™ Ceramic Disc Valve
- 1.2 GPM Flow Rate

* Retailer exclusive product, available for special order only.

CEC Compliant | Cal Green Compliant | Meets EPA WaterSense | NSF Lead-Free Certified | ADA Compliant

Kamato®
Single Handle Centerset Lavatory Faucet

Model	Finish	Case Qty	List Price
F042MD0C	Polished Chrome	3	$249.00
F042MD0B*	Matte Black	3	$300.00

** Retailer exclusive product, available for special order only.*

Technical Info

Holes:
- 1 or 3-Hole 4" Installation

Dims:
- 6 27/64" Spout Height
- 3 21/32" Deck to Spout
- 4 17/32" Spout Reach
- 2" Maximum Deck Thickness

Features:
- All Metal Construction
- Trough Spout
- Push & Seal™ Drain
- Installs with or without deckplate (included)
- Pforever Seal™ Ceramic Disc Valve
- 1.5 GPM Flow Rate

Karci *
Single Handle Centerset Lavatory Faucet

LF042KACC	Polished Chrome	3	$200.00
LF042KAGS	Spot Defense	3	$222.00
LF042KABB	Matte Black	3	$254.00

Holes:
- 1 or 3-Hole 4" Installation

Dims:
- 6 3/32" Spout Height
- 4 1/32" Deck to Aerator
- 4 7/16" Spout Reach
- 3" Maximum Deck Thickness

Features:
- All Metal Construction
- Push & Seal™ Drain
- Installs with or without deckplate (included)
- Pfast Connect™
- Spot Defense Finish (GS Finish Only)
- TiteSeal™ Deckplate
- Pforever Seal™ Ceramic Disc Valve
- 1.2 GPM Flow Rate

Ladera *
Single Handle Centerset Lavatory Faucet

LF042LRCC	Polished Chrome	3	$177.00
LF042LRGS	Spot Defense	3	$185.00
LF042LRBB	Matte Black	3	$218.00

Holes:
- 1 or 3-Hole 4" Installation

Dims:
- 5 3/4" Spout Height
- 3 27/32" Deck to Aerator
- 4 29/32" Spout Reach
- 3" Maximum Deck Thickness

Features:
- Multi-Mount
- Pfast Connect™
- Pforever Seal™ Ceramic Disc Valve
- Push & Seal™ Drain
- Spot Defense Finish (GS Finish Only)
- TiteSeal™ Deckplate
- 1.2 GPM Flow Rate

* Retailer exclusive product, available for special order only.

CEC Compliant | Cal Green Compliant | Meets EPA WaterSense | NSF Lead-Free Certified | ADA Compliant

Leen
Single Handle Centerset Lavatory Faucet

Model	Finish	Case Qty	List Price
LF042LECC	Polished Chrome	3	$237.00

Technical Info

Holes: • 1 or 3-Hole 4" Installation

Dims:
- 3 21/32" Spout Height
- 4 1/4" Deck to Aerator
- 4 11/16" Spout Reach
- 3" Maximum Deck Thickness

Features:
- All Metal Construction
- Pforever Seal™ Ceramic Disc Valve
- TiteSeal™ Deckplate
- Push & Seal™ Drain
- Installs with or without deckplate (included)
- 1.2 GPM Flow Rate

Matlock
Single Handle Centerset Lavatory Faucet

Model	Finish	Case Qty	List Price
LF042MLCC	Polished Chrome	3	$164.00
LF042MLCB	Matte Black	3	$189.00

Holes: • 1 or 3-Hole 4" Installation

Dims:
- 5" Spout Height
- 4 3/32" Deck to Aerator
- 4 19/32" Spout Reach
- 3" Maximum Deck Thickness

Features:
- Push & Seal™ Drain
- Installs with or without deckplate (included)
- Pfast Connect™
- TiteSeal™ Deckplate
- Pforever Seal™ Ceramic Disc Valve
- 1.2 GPM Flow Rate

Parisa®
Single Handle Centerset Lavatory Faucet

Model	Finish	Case Qty	List Price
LF042PRCC	Polished Chrome	3	$139.00
LF042PRKK	Brushed Nickel	3	$166.00

Holes: • 1 or 3-Hole 4" Installation

Dims:
- 4 11/16" Spout Height
- 3 7/16" Deck to Aerator
- 4 7/16" Spout Reach
- 2 1/2" Max Deck Thickness

Features:
- Push & Seal™ Drain
- Installs with or without deckplate (included)
- Pforever Seal Ceramic Disc Valve
- 1.2 GPM Flow Rate

CEC Compliant | Cal Green Compliant | Meets EPA WaterSense | NSF Lead-Free Certified | ADA Compliant

Pasadena®
Single Handle Centerset Lavatory Faucet

Model	Finish	Case Qty	List Price
LF042PDCC	Polished Chrome	3	$116.00

Technical Info

Holes:
- 3-Hole 4" Installation

Dims:
- 6 1/4" Spout Height
- 3 1/8" Deck to Aerator
- 4 1/4" Spout Reach
- 1 1/2" Max Deck Thickness

Features:
- Push & Seal™ Drain
- Pforever Seal Ceramic Disc Valve
- 1.2 GPM Flow Rate

Penn
Single Handle Centerset Lavatory Faucet

LF0421PEC	Polished Chrome	3	$222.00
LF0421PEGS	Spot Defense	3	$244.00
LF0421PEB	Matte Black	3	$266.00

Holes:
- 1 or 3-Hole 4" Installation

Dims:
- 5 11/16" Spout Height
- 4 23/32" Deck to Aerator
- 4 1/2" Spout Reach
- 3" Maximum Deck Thickness

Features:
- All Metal Construction
- Push & Seal™ Drain
- Installs with or without deckplate (included)
- Pfast Connect™
- Spot Defense Finish (GS Finish Only)
- TiteSeal™ Deckplate
- Pforever Seal™ Ceramic Disc Valve
- 1.2 GPM Flow Rate

Rancho
Single Handle Centerset Lavatory Faucet

LF042RCHC	Polished Chrome	3	$178.00
LF042RCHGS	Spot Defense	3	$199.00
LF042RCHB	Matte Black	3	$221.00

Holes:
- 1 or 3-Hole 4" Installation

Dims:
- 5 15/16" Spout Height
- 4 5/32" Deck to Aerator
- 4 31/32" Spout Reach
- 3" Maximum Deck Thickness

Features:
- Push & Seal™ Drain
- Installs with or without deckplate (included)
- Pfast Connect™
- Spot Defense Finish (GS Finish Only)
- TiteSeal™ Deckplate
- Pforever Seal™ Ceramic Disc Valve
- 1.2 GPM Flow Rate

CEC Compliant | Cal Green Compliant | Meets EPA WaterSense | NSF Lead-Free Certified | ADA Compliant

Selia®
Single Handle Centerset Lavatory Faucet

Model	Finish	Case Qty	List Price
LF042SLCC	Polished Chrome	3	$121.00

Technical Info

Holes: • 1 or 3-Hole 4" Installation

Dims:
- 5 3/8" Spout Height
- 3 1/4" Deck to Aerator
- 4 3/8" Spout Reach
- 3" Maximum Deck Thickness

Features:
- Pfast Connect
- Push & Seal™ Drain
- Pforever Seal Ceramic Disc Valve
- Installs with or without deckplate (included)
- 1.2 GPM Flow Rate

Vega®
Single Handle Centerset Lavatory Faucet

Model	Finish	Case Qty	List Price
LF042VGKK	Brushed Nickel	3	$231.00

Holes: • 1 or 3-Hole 4" Installation

Dims:
- 6 19/32" Spout Height
- 4 7/32" Deck to Aerator
- 5 1/4" Spout Reach
- 2 1/2" Maximum Deck Thickness

Features:
- Trough Spout
- Push & Seal™ Drain
- Pforever Seal Ceramic Disc Valve
- Installs with or without deckplate (included)
- 1.2 GPM Flow Rate

Venturi
Single Handle Centerset Lavatory Faucet

Model	Finish	Case Qty	List Price
LF042VNCC*	Polished Chrome	3	$226.00
LF042VNBB	Matte Black	3	$230.00
LF042VNBG	Brushed Gold	3	$278.00

* Home Depot Exclusive

Holes: • 1 or 3-Hole 4" Installation

Dims:
- 6 27/32" Spout Height
- 4 5/32" Deck to Aerator
- 4 5/8" Spout Reach
- 1 1/2" Maximum Deck Thickness

Features:
- All Metal Construction
- Installs with or without deckplate (included)
- Pfast Connect™
- Unique Ribbon Water Flow Pattern
- Push & Seal™ Drain
- TiteSeal™ Deckplate
- Pforever Seal™ Ceramic Disc Valve
- 1.2 GPM Flow Rate

CEC Compliant | Cal Green Compliant | Meets EPA WaterSense | NSF Lead-Free Certified | ADA Compliant

Verano®
Single Handle Centerset Lavatory Faucet

Model	Finish	Case Qty	List Price
LF042VRCC	Polished Chrome	3	$124.00

Technical Info

Holes:
- 1 or 3-Hole 4" Installation

Dims:
- 6 1/4" Spout Height
- 3 5/16" Deck to Aerator
- 3 31/32" Spout Reach
- 2" Maximum Deck Thickness

Features:
- Push & Seal™ Drain
- TiteSeal™ DeckPlate
- Installs with or without deckplate (included)
- Pforever Seal™ Ceramic Disc Valve
- 1.2 GPM Flow Rate

Zeelan *
Single Handle Centerset Lavatory Faucet

Model	Finish	Case Qty	List Price
LF042ZLC	Polished Chrome	3	$241.00
LF042ZLB	Matte Black	3	$268.00

Holes:
- 1 or 3-Hole 4" Installation

Dims:
- 8 7/8" Spout Height
- 6 1/16" Deck to Aerator
- 5" Spout Reach
- 3" Maximum Deck Thickness

Features:
- TiteSeal™ DeckPlate
- Installs with or without deckplate (included)
- Pforever Seal™ Ceramic Disc Valve
- 1.2 GPM Flow Rate

* Retailer exclusive product, available for special order only.

CEC Compliant | Cal Green Compliant | Meets EPA WaterSense | NSF Lead-Free Certified | ADA Compliant

Two Handle 4" Centerset Lavatory

Lavatory

	Model	Finish	Case Qty	List Price
Bruxie * Two Handle Centerset Lavatory Faucet	LF048BIEBG	Brushed Gold	3	$240.00

* Home Depot Exclusive

Technical Info

Holes:
- 3-Hole 4" Installation

Dims:
- 8 1/16" Spout Height
- 5 13/32" Deck to Aerator
- 4 1/2" Spout Reach
- 1 1/4" Max Deck Thickness

Features:
- TiteSeal™ Deckplate
- Fixed hub handles for smooth rotation
- Push & Seal™ Drain
- Pforever Seal Ceramic Disc Valve
- 1.2 GPM Flow Rate

Classic® Two Handle Centerset Lavatory Faucet	LFWL2230K	Brushed Nickel	3	$98.00

Holes:
- 3-Hole 4" Installation

Dims:
- 3 7/32" Spout Height
- 1 13/16" Deck to Aerator
- 4 5/32" Spout Reach
- 1 1/2" Max Deck Thickness

Features:
- Washerless Valves
- Mounting Hardware Included
- Mounting Posts Included
- Pop-Up Drain Included
- 1.2 GPM Flow Rate

Courant Two Handle Centerset Lavatory Faucet	LF-048-COPC	Polished Chrome	3	$143.00

Holes:
- 3-Hole 4" Installation

Dims:
- 4 13/16" Spout Height
- 1 23/32" Deck to Aerator
- 3 21/32" Spout Reach
- 1 1/2" Max Deck Thickness

Features:
- Fixed Spout
- 3-Hole Deckplate
- Mounting Hardware Included
- Pop-Up Drain Included
- 1.2 GPM Flow Rate

* Retailer exclusive product, available for special order only.

CEC Compliant | Cal Green Compliant | Meets EPA WaterSense | NSF Lead-Free Certified | ADA Compliant

	Model	Finish	Case Qty	List Price
Fullerton Two Handle Centerset Lavatory Faucet	LF048FTCC	Polished Chrome	3	$232.00

Technical Info

Holes: • 3-Hole 4" Installation

Dims:
- 6" Spout Height
- 4 19/32" Deck to Aerator
- 4 3/16" Spout Reach
- 1 11/16" Maximum Deck Thickness

Features:
- TiteSeal™ Deckplate
- Fixed hub handles for smooth rotation
- Push & Seal™ Drain
- Pforever Seal Ceramic Disc Valve
- 1.2 GPM Flow Rate

Halifax® * Two Handle Centerset Lavatory Faucet	LF048HLBB	Matte Black	3	$236.00

Holes: • 3-Hole 4" Installation

Dims:
- 6 17/32" Spout Height
- 4 7/16" Deck to Aerator
- 4 3/16" Spout Reach
- 1 5/16" Maximum Deck Thickness

Features:
- TiteSeal™ Deckplate
- Fixed hub handles for smooth rotation
- Push & Seal™ Drain
- Pforever Seal Ceramic Disc Valve
- 1.2 GPM Flow Rate

Henlow® Two Handle Centerset Lavatory Faucet	LF048HECC	Polished Chrome	3	$124.00

Holes: • 3 Hole 4" Installation

Dims:
- 8" Spout Height
- 4 29/32" Deck to Spout
- 5 1/4" Spout Reach
- 1 1/2" Max Deck Thickness

Features:
- TiteSeal™ Deckplate
- White Ceramic Handles
- Washerless Cartridges
- 1.2 GPM Flow Rate

* Retailer exclusive product, available for special order only.

CEC Compliant | Cal Green Compliant | Meets EPA WaterSense | NSF Lead-Free Certified | ADA Compliant

Two Handle 4" Centerset Lavatory

Karci
Two Handle Centerset Lavatory Faucet

Model	Finish	Case Qty	List Price
LF048KACC	Polished Chrome	3	$212.00
LF048KAGS	Spot Defense	3	$228.00
LF048KABB	Matte Black	3	$244.00

Technical Info

Holes:
- 3-Hole 4" Installation

Dims:
- 5 21/32" Spout Height
- 4 3/4" Deck to Aerator
- 4 3/16" Spout Reach
- 1 1/4" Maximum Deck Thickness

Features:
- Push & Seal™ Drain
- Fixed hub handles for smooth rotation
- Pforever Seal Ceramic Disc Valve
- All Metal Construction
- Spot Defense Finish (GS Finish Only)
- TiteSeal™ DeckPlate
- 1.2 GPM Flow Rate

Masey®
Two Handle Centerset Lavatory Faucet

LF048MCCC	Polished Chrome	3	$131.00
LF048MCKK	Brushed Nickel	3	$145.00

Holes:
- 3 Hole 4" Installation

Dims:
- 6 1/32" Spout Height
- 3 31/32" Deck to Spout
- 4 3/4" Spout Reach
- 1 1/2" Max Deck Thickness

Features:
- Push and Seal™ Drain
- TiteSeal™ DeckPlate
- Fixed hub handles for smooth rotation
- Pforever Seal Ceramic Disc Valve
- 1.2 GPM Flow Rate

Pasadena®
Two Handle Centerset Lavatory Faucet

LF048PDCC	Polished Chrome	3	$150.00
LF048PDKK	Brushed Nickel	3	$166.00

Holes:
- 3-Hole 4" Installation

Dims:
- 5 5/8" Spout Height
- 3 23/32" Deck to Spout
- 4 5/8" Spout Reach
- 1 7/16" Max Deck Thickness

Features:
- Push and Seal™ Drain
- Fixed hub handles for smooth rotation
- Pforever Seal Ceramic Disc Valve
- 1.2 GPM Flow Rate

CEC Compliant | Cal Green Compliant | Meets EPA WaterSense | NSF Lead-Free Certified | ADA Compliant

Penn
Two Handle Centerset Lavatory Faucet

Model	Finish	Case Qty	List Price
LF048PEC	Polished Chrome	3	$232.00
LF048PEB	Matte Black	3	$278.00

Technical Info

Holes:
- 3 Hole 4" Installation

Dims:
- 5 15/32" Spout Height
- 4 17/32" Deck to Aerator
- 4 21/32" Spout Reach
- 1 1/4" Maximum Deck Thickness

Features:
- Push and Seal™ Drain
- Fixed hub handles for smooth rotation
- Pforever Seal Ceramic Disc Valve
- All Metal Construction
- TiteSeal™ DeckPlate
- 1.2 GPM Flow Rate

Rancho
Two Handle Centerset Lavatory Faucet

LF048RCHC	Polished Chrome	3	$178.00
LF048RCHGS	Spot Defense	3	$201.00
LF048RCHB	Matte Black	3	$221.00

Holes:
- 3 Hole 4" Installation

Dims:
- 6 9/16" Spout Height
- 4 23/32" Deck to Aerator
- 4 7/16" Spout Reach
- 1 1/2" Maximum Deck Thickness

Features:
- Push and Seal™ Drain
- Fixed hub handles for smooth rotation
- Pforever Seal Ceramic Disc Valve
- Spot Defense Finish (GS Finish Only)
- All Metal Construction
- TiteSeal™ DeckPlate
- 1.2 GPM Flow Rate

Sonterra®
Two Handle Centerset Lavatory Faucet

LFWL245PC	Polished Chrome	3	$100.00

Holes:
- 3-Hole 4" Installation

Dims:
- 7 29/32" Spout Height
- 4 13/16" Deck to Aerator
- 5 1/4" Spout Reach
- 1 1/4" Max Deck Thickness

Features:
- Washerless Cartridges
- 3-Hole Deckplate
- Ceramic White Handles
- Push & Seal™ Drain
- Pforever Seal Ceramic Disc Valve
- 1.2 GPM Flow Rate

CEC Compliant | Cal Green Compliant | Meets EPA WaterSense | NSF Lead-Free Certified | ADA Compliant

Two Handle 4" Centerset Lavatory

Vedra *
Two Handle Centerset Lavatory Faucet

Model	Finish	Case Qty	List Price
LF048VEDC	Polished Chrome	3	$165.00
LF048VEDGS	Spot Defense	3	$195.00
LF048VEDB	Matte Black	3	$230.00

Technical Info

Holes:
- 3 Hole 4" Installation

Dims:
- 8" Spout Height
- 5 5/32" Deck to Aerator
- 4 9/16" Spout Reach
- 1 1/4" Maximum Deck Thickness

Features:
- Push & Seal™ Drain
- Pforever Seal Ceramic Disc Valve
- Spot Defense Finish (GS Finish Only)
- Fixed hub handles for smooth rotation
- Washerless Cartridges
- TiteSeal™ DeckPlate
- 1.2 GPM Flow Rate

Venturi
Two Handle Centerset Lavatory Faucet

LF048VNBB	Matte Black	3	$225.00
LF048VNBG	Brushed Gold	3	$251.00

Holes:
- 3 Hole 4" Installation

Dims:
- 5 11/32" Spout Height
- 4 9/16" Deck to Aerator
- 4 1/32" Spout Reach
- 1 1/4" Maximum Deck Thickness

Features:
- Push & Seal™ Drain
- Pforever Seal Ceramic Disc Valve
- Unique Ribbon Water Flow
- TiteSeal™ DeckPlate
- 1.2 GPM Flow Rate

* Retailer exclusive product, available for special order only.

CEC Compliant | Cal Green Compliant | Meets EPA WaterSense | NSF Lead-Free Certified | ADA Compliant

Two Handle 8" Widespread Lavatory

	Model	Finish	Case Qty	List Price
Ashfield® Two Handle Widespread Lavatory Faucet	LF049YW2K	Brushed Nickel	3	$336.00

Technical Info

Holes: • 3-Hole 8-15" Installation

Dims:
- 6 11/16" Spout Height
- 2 13/32" Deck to Spout
- 4 1/2" Spout Reach
- 1 1/2" Maximum Deck Thickness

Features:
- All Metal Construction
- Trough Spout
- Adjustable Install
- Push & Seal™ Drain
- Pfast Connect
- Pforever Seal Ceramic Disc Valves
- 1.2 GPM Flow Rate

Auden® Two Handle Widespread Lavatory Faucet	LF049ADGS	Spot Defense	3	$243.00

Holes: • 3-Hole 8-15" Installation

Dims:
- 6 1/8" Spout Height
- 4 11/16" Deck to Spout
- 4 27/32" Spout Reach
- 1 1/2" Max Deck Thickness

Features:
- Push & Seal™ Drain
- Fixed hub handles for smooth rotation
- Adjustable Install
- Spot Defense Finish (GS Finish Only)
- Pfast Connect
- Pforever Seal Ceramic Disc Valves
- TiteSeal™ DeckPlate
- 1.2 GPM Flow Rate

Breckenridge® Two Handle Widespread Lavatory Faucet	LF049BCBB	Matte Black	3	$339.00

Holes: • 3-Hole 8-15" Installation

Dims:
- 7 23/32" Spout Height
- 4 25/32" Deck to Spout
- 4 25/32" Spout Reach
- 2" Max Deck Thickness

Features:
- Push & Seal™ Drain
- Fixed hub handles for smooth rotation
- Adjustable Install
- Pforever Seal Ceramic Disc Valves
- Pfast Connect
- TiteSeal™ DeckPlate
- 1.2 GPM Flow Rate

CEC Compliant | Cal Green Compliant | Meets EPA WaterSense | NSF Lead-Free Certified | ADA Compliant

Bruxie *
Two Handle Widespread Lavatory Faucet

Model	Finish	Case Qty	List Price
LF049BIEGS	Spot Defense	3	$277.00
LF049BIEBG	Brushed Gold	3	$297.00

* Home Depot Exclusive

Technical Info

Holes: • 3-Hole 8-20" Installation

Dims:
- 7 3/8" Spout Height
- 4 3/4" Deck to Aerator
- 7 7/8" Spout Reach
- 2 1/8" Maximum Deck Thickness

Features:
- Push & Seal™ Drain
- Fixed hub handles for smooth rotation
- Quick Install™ Tool
- Spot Defense Finish (GS Finish Only)
- Pforever Seal Ceramic Disc Valves
- Pfast Connect
- TiteSeal™ DeckPlate
- 1.2 GPM Flow Rate

Karci
Two Handle Widespread Lavatory Faucet

LF049KACC	Polished Chrome	3	$251.00
LF049KABB	Matte Black	3	$309.00

Holes: • 3-Hole 8-15" Installation

Dims:
- 5 13/32" Spout Height
- 4 9/16" Deck to Aerator
- 4 5/32" Spout Reach
- 2 3/32" Maximum Deck Thickness

Features:
- Push & Seal™ Drain
- Fixed hub handles for smooth rotation
- Adjustable Install
- Pforever Seal Ceramic Disc Valves
- Pfast Connect
- TiteSeal™ DeckPlate
- 1.2 GPM Flow Rate

Ladera *
Two Handle Widespread Lavatory Faucet

LF049LRYY	Tuscan Bronze	3	$266.00

Holes: • 3-Hole 8-15" Installation

Dims:
- 6 11/32" Spout Height
- 4 7/32" Deck to Aerator
- 5 1/8" Spout Reach
- 2" Maximum Deck Thickness

Features:
- Push & Seal™ Drain
- Fixed hub handles for smooth rotation
- Adjustable Install
- Pforever Seal Ceramic Disc Valves
- Pfast Connect
- TiteSeal™ DeckPlate
- 1.2 GPM Flow Rate

* Retailer exclusive product, available for special order only.

CEC Compliant | Cal Green Compliant | Meets EPA WaterSense | NSF Lead-Free Certified | ADA Compliant

Masey®
Two Handle Widespread Lavatory Faucet

Model	Finish	Case Qty	List Price
LF049MCCC	Polished Chrome	3	$210.00
LF049MCKK	Brushed Nickel	3	$232.00

Technical Info

Holes:
- 3-Hole 8-15" Installation

Dims:
- 5 7/8" Spout Height
- 3 13/16" Deck to Spout
- 4 17/32" Spout Reach
- 2 15/32" Max Deck Thickness

Features:
- Push & Seal™ Drain
- Adjustable Install
- Pforever Seal Ceramic Disc Valves
- Pfast Connect
- TiteSeal™ DeckPlate
- 1.2 GPM Flow Rate

Pasadena®
Two Handle Widespread Lavatory Faucet

LF049PDCC	Polished Chrome	3	$208.00
LF049PDKK	Brushed Nickel	3	$235.00

Holes:
- 3-Hole 8-15" Installation

Dims:
- 5 25/32" Spout Height
- 4 7/32" Deck to Aerator
- 4 25/32" Spout Reach
- 2" Maximum Deck Thickness

Features:
- Push & Seal™ Drain
- Pfast Connect
- Quick Install™ Tool
- Push & Seal™ Drain
- Pforever Seal Ceramic Disc Valve
- 1.2 GPM Flow Rate

Penn
Two Handle Widespread Lavatory Faucet

LF049PEGS	Spot Defense	3	$310.00
LF049PEB	Matte Black	3	$332.00

Holes:
- 3-Hole 8-15" Installation

Dims:
- 5 9/32" Spout Height
- 4 11/32" Deck to Aerator
- 4 31/32" Spout Reach
- 2 3/32" Maximum Deck Thickness

Features:
- Push & Seal™ Drain
- Fixed hub handles for smooth rotation
- Adjustable Install
- Spot Defense Finish (GS Finish Only)
- Pforever Seal Ceramic Disc Valves
- Pfast Connect
- TiteSeal™ DeckPlate
- 1.2 GPM Flow Rate

CEC Compliant | Cal Green Compliant | Meets EPA WaterSense | NSF Lead-Free Certified | ADA Compliant

	Model	Finish	Case Qty	List Price
Sonterra Two Handle Widespread Lavatory Faucet	LFWL8SNPC	Polished Chrome	3	$222.00

Technical Info

Holes:
- 3-Hole 8" Installation

Dims:
- 7-7/8" Spout Height
- 4-3/4" Deck to Aerator
- 5-1/4" Spout Reach
- 3" Maximum Deck Thickness

Features:
- Push & Seal™ Drain
- TiteSeal™ DeckPlate
- Adjustable Install
- Pforever Seal Ceramic Disc Valves
- 1.2 GPM Flow Rate

Venturi Two Handle Widespread Lavatory Faucet	LF049VNBB	Matte Black	3	$329.00

Holes:
- 3-Hole 8-15" Installation

Dims:
- 5-11/32" Spout Height
- 4-9/16" Deck to Aerator
- 41/32" Spout Reach
- 1-1/2" Maximum Deck Thickness

Features:
- Push & Seal™ Drain
- Fixed hub handles for smooth rotation
- Adjustable Install
- Pforever Seal Ceramic Disc Valves
- Unique Ribbon Water Flow
- Pfast Connect
- 1.2 GPM Flow Rate

CEC Compliant | Cal Green Compliant | Meets EPA WaterSense | NSF Lead-Free Certified | ADA Compliant

Tub & Shower

	Model	Finish	Case Qty	List Price
Auden® Single Handle 0X8 Series Tub & Shower Faucet and Valve	8P8WS2ADSC	Polished Chrome	3	$310.00
	8P8WS2ADSGS	Spot Defense	3	$329.00
	8P8WS2ADSY	Tuscan Bronze	3	$345.00

Technical Info

Features:
- 3-Function Showerhead
- Spot Defense Finish (GS Finishes only)
- Pforever Seal ceramic disc valve
- SecurePfit™ Technology with Anti Handle Wobble
- Pressure balanced valve included
- Temperature Limit Stop
- 1.8 GPM Flow Rate (Showerhead)

Ferris Handheld Shower	8P8-WS2-FERB	Matte Black	3	$337.00

Features:
- Single Function Showerhead
- Easy to Clean Nozzles
- Multifunction Showerhead
- Decorative Tub Spout
- Pforever Seal Ceramic Disc Valve
- SecurePfit™ Technology with Anti Handle Wobble
- Pressure balanced valve included
- 1.8 GPM Flow Rate (Showerhead)

Fullerton™ Single Handle 0X8 Series Tub & Shower Faucet & Valve	8P8FTCC	Polished Chrome	3	$248.00

Features:
- Single Function Showerhead
- Easy to Clean Nozzles
- Raincan Showerhead
- Decorative Tub Spout
- Pforever Seal Ceramic Disc Valve
- SecurePfit™ Technology with Anti Handle Wobble
- Pressure balanced valve included
- 2.0 GPM Flow Rate (Showerhead)

CEC Compliant | Cal Green Compliant | Meets EPA WaterSense | NSF Lead-Free Certified | ADA Compliant

Karci
Single Handle OX8 Series Tub & Shower Faucet and Valve

Model	Finish	Case Qty	List Price
8P8WS2KASGS	Spot Defense	3	$332.00
8P8WS2KASB	Matte Black	3	$372.00

Technical Info

Features:
- Easy to Clean Nozzles
- 3-Function Showerhead
- Pforever Seal ceramic disc valve
- Quick Connect Tub Spout
- SecurePfit™ Technology with Anti Handle Wobble
- Pressure balanced valve included
- Temperature Limit Stop
- 1.8 GPM Flow Rate (Showerhead)

Karci *
Single Handle OX8 Series Tub & Shower with Hand Shower

Model	Finish	Case Qty	List Price
8P8WS2HKASC	Polished Chrome	3	$315.00
8P8WS2HKASGS	Spot Defense	3	$373.00
8P8WS2HKASB	Matte Black	3	$370.00

Features:
- 3-Function Showerhead
- Easy to Clean Nozzles
- Spot Defense Finish (GS Finish only)
- Pforever Seal ceramic disc valve
- Quick Connect Tub Spout
- SecurePfit™ Technology with Anti Handle Wobble
- Pressure balanced valve included
- Temperature Limit Stop
- 1.8 GPM Flow Rate

Ladera *
Single Handle OX8 Series Tub & Shower Faucet and Valve

Model	Finish	Case Qty	List Price
8P8WS2LRSC	Polished Chrome	1	$318.00
8P8WS2LRSGS	Spot Defense	1	$381.00

Features:
- 3-Function Showerhead
- Easy to Clean Nozzles
- Spot Defense Finish (GS Finishes only)
- Quick Connect Tub Spout
- SecurePfit™ Technology with Anti Handle Wobble
- Pressure balanced valve included
- Temperature Limit Stop
- 1.8 GPM Flow Rate (Showerhead)

* Retailer exclusive product, available for special order only.

CEC Compliant | Cal Green Compliant | Meets EPA WaterSense | NSF Lead-Free Certified | ADA Compliant

	Model	Finish	Case Qty	List Price
Masey® Single Handle 0X8 Series Tub & Shower Faucet and Valve	8P8WS2MCSC	Polished Chrome	3	$267.00
	8P8WS2MCSK	Brushed Nickel	3	$287.00

Technical Info

Features:
- 3-Function Showerhead
- Pforever Seal ceramic disc valve
- Quick Connect Tub Spout
- SecurePfit™ Technology with Anti Handle Wobble
- Pressure balanced valve included
- Temperature Limit Stop
- 1.8 GPM Flow Rate (Showerhead)

Pfirst Series 1-Handle Tub & Shower Trim	8P8-030C	Polished Chrome	1	$158.00

Features:
- Single Function-Showerhead
- Pforever Seal ceramic disc valve
- Quick Connect Tub Spout
- SecurePfit™ Technology with Anti Handle Wobble
- Pressure balanced valve included
- Temperature Limit Stop
- 2.5 GPM Flow Rate (Showerhead)

Penn Single Handle 0X8 Series Tub & Shower Faucet and Valve	8P8PESC	Polished Chrome	1	$332.00
	8P8PESB	Matte Black	1	$393.00

Features:
- Single Function-Showerhead
- Pforever Seal ceramic disc valve
- Quick Connect Tub Spout
- SecurePfit™ Technology with Anti Handle Wobble
- Pressure balanced valve included
- Temperature Limit Stop
- 2.5 GPM Flow Rate (Showerhead)

CEC Compliant | Cal Green Compliant | Meets EPA WaterSense | NSF Lead-Free Certified | ADA Compliant

	Model	Finish	Case Qty	List Price
Rancho Single Handle OX8 Series Tub & Shower Faucet and Valve	8P8WS2RCHSC	Polished Chrome	3	$317.00
	8P8WS2RCHSB	Matte Black	3	$376.00

Technical Info

Features:
- 3-Function Showerhead
- Easy to Clean Nozzles
- Spot Defense Finish (GS Finishes only)
- Pforever Seal ceramic disc valve
- Quick Connect Tub Spout
- SecurePfit™ Technology with Anti Handle Wobble
- Pressure balanced valve included
- Temperature Limit Stop
- 1.8 GPM Flow Rate (Showerhead)

Rancho Handheld Tub & Shower Trim	8P8HRCHSC	Polished Chrome	3	$340.00
	8P8HRCHSB	Matte Black	3	$420.00

Features:
- 3-Function Showerhead
- Restore™ Spray Technology
- Pforever Seal ceramic disc valve
- Easy to Clean Nozzles
- Full Spray & Massage Combo
- Quick Connect Tub Spout
- SecurePfit™ Technology with Anti Handle Wobble
- Includes complete valve, cartridge and trim
- 2.5 GPM Flow Rate (Showerhead)

Solita® Single Handle OX8 Series Tub & Shower Faucet and Valve	8P8SOCC	Polished Chrome	1	$248.00

Features:
- Metal Lever Handle
- 5-Function Handheld Shower Showerhead
- 72" PVC Hose
- Pressure balanced valve included
- Pforever Seal Ceramic Disc Valve
- 2.5 GPM Flow Rate (Handshower)

CEC Compliant | Cal Green Compliant | Meets EPA WaterSense | NSF Lead-Free Certified | ADA Compliant

	Model	Finish	Case Qty	List Price
Vorena™ Single Handle 0X8 Series Tub & Shower Faucet and Valve	8P8VOCC	Polished Chrome	3	$290.00

Technical Info

Features:
- Single Function Showerhead
- 8" Square Rainfall Showerhead
- Pressure balanced valve included
- Easy to Clean Nozzles
- 17" Extended Square Shower Arm
- Pforever Seal ceramic disc valve
- 2.5 GPM Flow Rate (Showerhead)

Venturi * 1-Handle Tub & Shower Faucet	8P8-WS2-VNSB	Matte Black	1	$361.00

Features:
- 6-Function Showerhead
- Easy to Clean Nozzles
- Pforever Seal ceramic disc valve
- Quick Connect Tub Spout
- SecurePfit™ Technology with Anti Handle Wobble
- Pressure balanced valve included
- Temperature Limit Stop
- 1.8 GPM Flow Rate (Showerhead)

* Retailer exclusive product, available for special order only.

CEC Compliant | Cal Green Compliant | Meets EPA WaterSense | NSF Lead-Free Certified | ADA Compliant

	Model	Finish	Case Qty	List Price
Pasadena™ 3 Hole Roman Tub Trim	806PDCC	Polished Chrome	1	$459.00

Technical Info

Holes:
- 3-Hole 10" Installation

Dims:
- 9 5/6" Spout Height
- 6 1/2" Deck to Aerator
- 8 1/5" Spout Reach
- 2 3/4" Maximum Deck Thickness

Features:
- All Metal Construction
- Complete Tub Faucet Trim
- Includes Rough-in Valve
- Pforever Seal Ceramic Disc Valves
- 15 GPM Flow Rate
- Valve Access Required, plumber assistance may be necessary

Kamato™ 4 Hole Roman Tub Trim	8064MD0C	Polished Chrome	1	$698.00

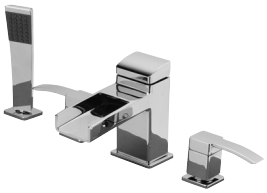

Holes:
- 4-Hole

Dims:
- 9 5/6" Spout Height
- 6 1/2" Deck to Aerator
- 8 1/5" Spout Reach
- 2 3/4" Maximum Deck Thickness

Features:
- Metal Lever Handles
- Complete Tub Faucet Trim
- Pforever Seal Ceramic Disc Valve
- Includes Rough-in Valve
- 2.5 GPM Flow Rate (Handheld)
- Valve Access Required, plumber assistance may be necessary

CEC Compliant | Cal Green Compliant | Meets EPA WaterSense | NSF Lead-Free Certified | ADA Compliant

	Model	Finish	Case Qty	List Price	Technical Info
Eco Showerhead	015EP1C	Polished Chrome	4	$28.00	**Features:** • Adjustable Spray • 2-Function Showerhead • Arm/Flange Not Included • 1.5 GPM Flow Rate
Universal Trim Showerhead	015TD1K	Brushed Nickel	4	$75.00	**Features:** • 5 Function Showerhead • Arm/Flange Not Included • 2.5 GPM Flow Rate
Restore 2.5 Showerhead	015RSCC	Polished Chrome	4	$65.00	**Features:** • Easy to Clean Nozzles • 3-Function Showerhead • Restore™ Spray Technology • Arm/Flange Not Included • 2.5 GPM Flow Rate
Thermoforce Showerhead	015WS2THCC	Polished Chrome	4	$61.00	**Features:** • Easy to Clean Nozzles • 6-Function Showerhead • Thermoforce™ Spray Technology • Arm/Flange Not Included • 1.8 GPM Flow Rate

CEC Compliant | Cal Green Compliant | Meets EPA WaterSense | NSF Lead-Free Certified | ADA Compliant

	Model	Finish	Case Qty	List Price	Technical Info
Universal Trim Showerhead	015TN1C	Polished Chrome	4	$31.00	**Features:** • 5-Function Showerhead • Easy to Clean Nozzles • Arm/Flange Not Included • 2.5 GPM Flow Rate
Universal Trim 5-Function Showerhead	015WS2TD2C	Polished Chrome	4	$40.00	**Features:** • 5-Function Showerhead • Easy to Clean Nozzles • Arm/Flange Not Included • 2.5 GPM Flow Rate
Vie 2.5 Showerhead	015VICC	Polished Chrome	4	$50.00	**Features:** • Easy to Clean Nozzles • HydroDrench™ Spray Tecnnology • 5- Function- Showerhead • Arm/Flange Not Included • 2.5 GPM Flow Rate
Vorena Showerhead	015VO3C	Polished Chrome	4	$145.00	**Features:** • Easy to Clean Nozzles • Raincan Showerhead • Arm/Flange Included • 2.5 GPM Flow Rate

CEC Compliant | Cal Green Compliant | Meets EPA WaterSense | NSF Lead-Free Certified | ADA Compliant

	Model	Finish	Case Qty	List Price
Restore 2.5GPM Handshower and Hose	016RSCC	Polished Chrome	4	$97.00

3

Technical Info

Features:
- 3-Function Showerhead
- Easy to Clean Nozzles
- Restore™ Spray Technology
- Arm/Flange Not Included
- 60" Hose Included
- 2.5 GPM Flow Rate

Penn Showerhead	016-PEB	Matte Black	4	$106.00

5

Features:
- 3-Function Showerhead
- Easy to Clean Nozzles
- Arm/Flange Not Included
- 60" Hose Included
- 2.5 GPM Flow Rate

Vie 2.5GPM Handshower and Hose	016VICC	Polished Chrome	4	$80.00

5

Features:
- 5-Function Showerhead
- Easy to Clean Nozzles
- HydroDrench™ Spray Technology
- Arm/Flange Not Included
- 60" Hose Included
- 2.5 GPM Flow Rate

CEC Compliant | Cal Green Compliant | Meets EPA WaterSense | NSF Lead-Free Certified | ADA Compliant

	Model	Finish	Case Qty	List Price
Square - Slide Bar	016HH14C	Polished Chrome	3	$216.00

Technical Info

Features:
- 72" Mylar hose
- Easy to Clean Nozzles
- Raincan Showerhead
- 3 Way Diverter: Allows the use of handshower, showerhead or both at the same time
- Adjustable cradle for hand shower height
- Includes Showerhead, Handshower, Arm, Flange, Slidebar with Cradle, Diverter and Hose
- 2.5 GPM Flow Rate

Square - Slide Bar *	016HH15C	Polished Chrome	3	$221.00

Features:
- Easy to Clean Nozzles
- 60" Anti-Twist metal hose
- Raincan Showerhead
- 3 Way Diverter: Allows the use of handshower, showerhead or both at the same time
- Adjustable cradle for hand shower height
- Includes Showerhead, Handshower, Arm, Flange, Slidebar with Cradle, Diverter and Hose
- 2.5 GPM Flow Rate

* Retailer exclusive product, available for special order only.

CEC Compliant | Cal Green Compliant | Meets EPA WaterSense | NSF Lead-Free Certified | ADA Compliant

	Model	Finish	Case Qty	List Price
Thermostatic Shower Panel	016750SP	Stainless Steel/ Polished Chrome	1	$1,040.00

Technical Info

Features:
- Multi-Adjustable Shower Arm
- Thermostatic Mixing Valve
- Single Function Hand Shower And Showerhead
- 8" (20.3 cm) Square Raincan Showerhead
- 6 Self-Cleaning Adjustable Body Jets
- 5-Way Diverter Allows The Use Of Hand Shower, Showerhead, Toe Tester, Body Jets Or Both Hand Shower Plus Body Jets At The Same Time
- Self-Cleaning Handshower With 60" (152.4 Cm) Metal Hose
- 2.5 GPM Flow Rate Of Each Individual Outlet
- Limited Lifetime Warranty

CEC Compliant | Cal Green Compliant | Meets EPA WaterSense | NSF Lead-Free Certified | ADA Compliant

Bath Accessories

Breckenridge Accessories

	Model	Finish	Case Qty	List Price
18" Towel Bar	BTBBC1K	Brushed Nickel	3	$82.00
	BTBBC1B	Matte Black	3	$95.00
24" Towel Bar	BTBBC2K	Brushed Nickel	3	$91.00
	BTBBC2B	Matte Black	3	$105.00
Towel Ring	BRBBC0K	Brushed Nickel	3	$39.00
	BRBBC0B	Matte Black	3	$63.00
Paper Holder	BPHBC0K	Brushed Nickel	3	$61.00
	BPHBC0B	Matte Black	3	$71.00
Robe Hook	BRHBCKK	Brushed Nickel	3	$41.00
	BRHBCBB	Matte Black	3	$49.00
3-Piece Kit	BTBBC3K	Brushed Nickel	3	$181.00
	BTBBC3B	Matte Black	3	$206.00

Technical Info

Holes: • 2-Hole

Features:
- All Metal Construction
- Standard Mounting Bracket
- Concealed Screw Installation
- Mounting Hardware Included
- Invisihook

Holes: • 2-Hole

Features:
- All Metal Construction
- Standard Mounting Bracket
- Concealed Screw Installation
- Mounting Hardware Included
- Invisihook

Holes: • 2-Hole

Features:
- All Metal Construction
- Standard Mounting Bracket
- Concealed Screw Installation
- Mounting Hardware Included

Holes: • 2-Hole

Features:
- All Metal Construction
- Standard Mounting Bracket
- Concealed Screw Installation
- Mounting Hardware Included

Holes: • 2-Hole

Features:
- All Metal Construction
- Standard Mounting Bracket
- Concealed Screw Installation
- Mounting Hardware Included

Features: • Includes: 18" Towel Bar, Paper Holder and Towel Ring

Fullerton Accessories

18" Towel Bar

Model	Finish	Case Qty	List Price
BTBFT1C	Polished Chrome	2	$58.00
BTBFT1GS	Spot Defense	2	$62.00
BTBFT1B	Matte Black	2	$64.00
BTBFT1BG	Brushed Gold	2	$92.00

Technical Info

Holes: • 2-Hole

Features:
- Concealed screw installation
- Superior mounting posts for secure installation

24" Towel Bar

Model	Finish	Case Qty	List Price
BTBFT2C	Polished Chrome	3	$63.00
BTBFT2GS	Spot Defense	3	$67.00
BTBFT2B	Matte Black	3	$69.00
BTBFT2BG	Brushed Gold	3	$98.00

Holes: • 2-Hole

Features:
- Concealed screw installation
- Superior mounting posts for secure installation

Towel Ring

Model	Finish	Case Qty	List Price
BRBFT0C	Polished Chrome	3	$46.00
BRBFT0GS	Spot Defense	3	$48.00
BRBFT0B	Matte Black	3	$50.00
BRBFT0BG	Brushed Gold	3	$70.00

Holes: • 1-Hole

Features:
- Concealed screw installation
- Superior mounting posts for secure installation

Paper Holder

Model	Finish	Case Qty	List Price
BPHFT0C	Polished Chrome	3	$56.00
BPHFT0GS	Spot Defense	3	$58.00
BPHFT0B	Matte Black	3	$60.00
BPHFT0BG	Brushed Gold	3	$82.00

Holes: • 2-Hole

Features:
- Concealed screw installation
- Superior mounting posts for secure installation

Robe Hook

Model	Finish	Case Qty	List Price
BRHFT0C	Polished Chrome	3	$30.00
BRHFT0GS	Spot Defense	3	$34.00
BRHFT0B	Matte Black	3	$36.00
BRHFT0BG	Brushed Gold	3	$50.00

Holes: • 1-Hole

Features:
- Concealed screw installation
- Superior mounting posts for secure installation

3-Piece Kit

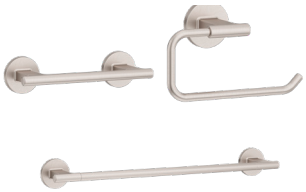

Model	Finish	Case Qty	List Price
BTBFT3C	Polished Chrome	3	$152.00
BTBFT3GS	Spot Defense	3	$164.00
BTBFT3B	Matte Black	3	$169.00
BTBFT3BG	Brushed Gold	3	$236.00

Features:
- Includes: 24" to 18" Towel Bar, Paper Holder and Towel Ring
- Concealed screw installation
- Superior mounting posts for secure installation

Modern Accessories

	Model	Finish	Case Qty	List Price	Technical Info
18" Towel Bar	BTBMD1C	Polished Chrome	3	$87.00	**Holes:** • 2-Hole **Features:** • All Metal Construction • Standard Mounting Bracket • Concealed Screw Installation • Mounting Hardware Included
24" Towel Bar	BTBMD2C	Polished Chrome	3	$95.00	**Holes:** • 2-Hole **Features:** • All Metal Construction • Standard Mounting Bracket • Concealed Screw Installation • Mounting Hardware Included
24" Double Towel Bar	BTBMD5C	Polished Chrome	3	$198.00	**Holes:** • 2-Hole **Features:** • All Metal Construction • Standard Mounting Bracket • Concealed Screw Installation • Mounting Hardware Included
Towel Ring	BRBMD1C	Polished Chrome	3	$59.00	**Holes:** • 1-Hole **Features:** • All Metal Construction • Standard Mounting Bracket • Concealed Screw Installation • Mounting Hardware Included
Paper Holder	BPHMD1C	Polished Chrome	3	$45.00	**Holes:** • 2-Hole **Features:** • All Metal Construction • Standard Mounting Bracket • Concealed Screw Installation • Mounting Hardware Included
Robe Hook	BRHMD1C	Polished Chrome	3	$23.00	**Holes:** • 1-Hole **Features:** • All Metal Construction • Standard Mounting Bracket • Concealed Screw Installation • Mounting Hardware Included
3-Piece Kit	BTBMD3C	Polished Chrome	3	$145.00	**Features:** • Includes: 24" Towel Bar, Paper Holder and Towel Ring

Venturi Accessories

	Model	Finish	Case Qty	List Price	Technical Info
18” Towel Bar	BTBVNC1B	Matte Black	2	$54.00	**Holes:** • 2-Hole **Features:** • All Metal Construction • ClickLock
24” Towel Bar	BTBVNC2B	Matte Black	3	$64.00	**Holes:** • 2-Hole **Features:** • All Metal Construction • ClickLock
Towel Ring	BRBVNC0B	Matte Black	3	$38.00	**Holes:** • 1-Hole **Features:** • All Metal Construction • ClickLock
Paper Holder	BPHVNC0B	Matte Black	3	$48.00	**Holes:** • 2-Hole **Features:** • All Metal Construction • ClickLock
Robe Hook	BRHVNC0B	Matte Black	3	$32.00	**Holes:** • 1-Hole **Features:** • All Metal Construction • ClickLock

Push & Seal Drain

Model	Finish	Case Qty	List Price
S47PSCC	Polished Chrome	3	$23.00
S47PSKK	Brushed Nickel	3	$26.00
S47PSYY	Tuscan Bronze	3	$29.00

Technical Info

Features:
- Quick Installation; No Tools Required
- Easy to Use: Simply Press to Seal & Open
- Guaranteed Tight Seal, Even Overnight
- Easy to Access Drain Pipe, Simply Unscrew and Remove Stopper

Pfister® Lifetime Limited Warranties

Lifetime Limited Warranties – Residential

Mechanical Limited Warranty: Except as otherwise provided below, ASSA ABLOY Group, for its Pfister brand products ("Pfister"), warrants to the original residential purchaser that their Pfister product (the "Product," excluding the electronic sensor, control box and power unit) will be free of all defects in material and workmanship that would impair the intended and proper use of the Product for the lifetime of the Product, and the "lifetime" of the Product shall be from the date of purchase for as long as the original purchaser occupies the residential premises in which the Product was originally installed.

Electrical Component Limited Warranty: Except as otherwise provided below, for electrical components, including the electronic sensor, control box and power unit (battery pack or AC adapter), Pfister warrants to the original residential purchaser that the electrical components of their Product will be free of all defects in material and workmanship for the lifetime of the Product, and the "lifetime" of the Product shall be for a period of five (5) years from the date of purchase, as long as the original purchaser occupies the residential premises in which the Product was originally installed.

Finish Limited Warranty: Except as otherwise provided below, Pfister warrants to the original residential purchaser against deterioration of the Product's finish for the lifetime of the Product, and the "lifetime" of the Product shall be from the date of purchase for as long as the original purchaser occupies the residential premises in which the Product was originally installed.

Lifetime Limited Warranties – Commercial

Mechanical Limited Warranty: Except as otherwise provided below, if the Product is installed in a commercial application, Pfister warrants to the original commercial purchaser that their Product will be free of all defects in material and workmanship that would impair the intended and proper use of the Product for the lifetime of the Product, and the "lifetime" of the Product shall be limited to a period of ten (10) years from the date of purchase, as long as the original purchaser owns the commercial premises in which the Product was originally installed.

Electrical Component Limited Warranty: Except as otherwise provided below, if the Product is installed in a commercial application, Pfister warrants to the original commercial purchaser that the electrical components of their Product will be free of all defects in material and workmanship for the lifetime of the Product, and the "lifetime" of the Product shall be limited to a period of three (3) years from the date of purchase, as long as the original purchaser owns the commercial premises in which the Product was originally installed.

Finish Limited Warranty: Except as otherwise provided below, if the Product is installed in a commercial application, Pfister warrants to the original commercial purchaser against deterioration of the Product's finish for the lifetime of the Product, and the "lifetime" of the Product shall be limited to a period of ten (10) years from the date of purchase, as long as the original purchaser owns the commercial premises in which the Product was originally installed.

Authorized Sellers: These residential and commercial warranties apply only to Products purchased from Pfister or a Pfister authorized seller, unless otherwise prohibited by law. Pfister Products are legitimately sold only by authorized sellers who are required to follow Pfister's policies, procedures, and quality control standards. Pfister reserves the right to reject warranty claims from purchasers for Products purchased from unauthorized sellers, including unauthorized Internet sites. **If you have any questions about whether a seller is authorized, please contact us at 1-800-Pfaucet (1-800-732-8238).**

Exclusions from Warranties

Pfister produces all Products in accordance with the Pfister Standards of Excellence. However, the Products are susceptible to indentation and imperfections due to specific processes, malleability of the material, and the elements of human intervention during manufacture. Although our internal safeguards protect us against shipping Products of unacceptable quality, an imperfection or surface blemish may be considered the highest quality standard obtainable on a particular Product. All final decisions of quality remain exclusively in the discretion of Pfister.

Conditions that are not covered by these warranties include:

1. Any Pfister Product installed prior to January 1, 1997 is not covered by these warranties.
2. Any Pfister Product which has been damaged as a result of installation contrary to any of Pfister's written installation instructions is not covered by these warranties.
3. Any Pfister Product which has been modified by any non-Pfister component is not covered by these warranties.
4. Any Pfister Product having a defect caused by neglect, misuse, abuse, or unreasonable or extraordinary use, or improper maintenance or repair, or accidents or acts of God, is not covered by these warranties.
5. Any Pfister Product having a defect due to use of paints, solvents, or other chemicals is not covered by these warranties.
6. Any Pfister Product that is used in combination with assemblies, aerators, cartridges, handles, hoses, spouts,

Pfister® Lifetime Limited Warranties

or any other component other than those manufactured by Pfister and designated for use with the applicable Product is not covered by these warranties.

7. Any Pfister Product that was purchased from an unauthorized seller is not covered by these warranties.

These warranties are not transferable. Except as otherwise stated herein, if there are any differences between these warranties and warranties printed in marketing or other Product materials, these warranties shall control.

Warranty Claims

Any Product believed to be defective as covered by these warranties may not be returned for warranty service without prior authorization from Pfister. Purchasers who wish to make a warranty claim based upon a Product defect must contact Pfister within thirty (30) days from the date of discovery of the alleged defect(s). In order to notify Pfister and receive assistance or service under these warranties, you may: (1) speak with a consumer service representative by calling 1-800-Pfaucet (1-800-732-8238), or (2) write the consumer service department c/o Pfister Inc., 19701 DaVinci, Lake Forest, CA 92610, and include a description of the claimed defect, model number, your name, address, phone number, the date of purchase, and a dated proof of purchase, or (3) email Pfister's customer service department by going to www.pfisterfaucets.com, or (4) notify the location or distributor from which the Product was purchased.

Please note that, for all warranty claims, you will be required to provide a description of any claimed defect(s) and a dated proof of purchase from Pfister or the Pfister authorized seller to verify warranty eligibility. Pfister reserves the right to request other information and evidence reasonably required to verify warranty eligibility and, if requested, you must permit inspection of the Product by Pfister or its representatives. If, after investigation, Pfister honors the warranty claim, the remedy will be performed by or on behalf of Pfister in accordance with the below heading, "Remedies." Please note that Products may not be returned to Pfister without prior authorization from Pfister. If authorized by Pfister, you will need to mail your Product to Pfister Inc., 19701 DaVinci, Lake Forest, CA 92610.

Remedies

For certain claimed defect(s) covered by these warranties, as determined by Pfister, Pfister will provide you with troubleshooting steps. For other claimed defect(s) covered by these warranties, as determined by Pfister, Pfister will replace the defective Product or part. If a Pfister Product, which is the same as the Pfister Product or any part covered by these warranties, has been discontinued at the time of replacement or if Pfister determines, in its sole discretion, that such replacement is inappropriate, Pfister reserves the right to substitute an alternative product. Pfister also reserves the right to accept or reject an alternative product proposed as a replacement, when the value is higher than that of the Product originally purchased by the purchaser. Except as expressly provided in these warranties to the contrary, PFISTER SHALL NOT BE OBLIGATED OR LIABLE FOR LABOR CHARGES OR OTHER CHARGES RELATED TO INSTALLATION, REPAIR OR REPLACEMENT OF A PFISTER PRODUCT, OR FOR LOSS OF, OR DAMAGE TO, ANY MATERIAL WHICH IS NOT SOLD BY PFISTER.

Limitation of Liabilities

THERE ARE NO WARRANTIES WHICH EXTEND BEYOND THOSE STATED HEREIN. ANY IMPLIED WARRANTIES THAT MAY BE APPLICABLE TO PRODUCTS, INCLUDING IMPLIED WARRANTIES OF MERCHANTABILITY OR FITNESS FOR A PARTICULAR PURPOSE, ARE LIMITED IN DURATION TO THE DURATION OF THIS WARRANTY. SOME STATES DO NOT ALLOW LIMITATIONS ON HOW LONG AN IMPLIED WARRANTY LASTS, SO THE ABOVE LIMITATION MAY NOT APPLY TO YOU. UNDER NO CIRCUMSTANCES SHALL PFISTER BE LIABLE FOR ANY SPECIAL, INCIDENTAL, OR CONSEQUENTIAL DAMAGES BASED UPON BREACH OF THIS LIMITED WARRANTY, BREACH OF CONTRACT, OR STRICT LIABILITY. SOME STATES DO NOT ALLOW THE EXCLUSION OR LIMITATION OF INCIDENTAL OR CONSEQUENTIAL DAMAGES, SO THE ABOVE LIMITATION OR EXCLUSION MAY NOT APPLY TO YOU. THIS WARRANTY GIVES YOU SPECIFIC LEGAL RIGHTS, AND YOU MAY ALSO HAVE OTHER RIGHTS WHICH VARY FROM STATE TO STATE.

Effective Date: April 1, 2021

Last Revised: April 14, 2023

Pfister Terms and Conditions

THE FOLLOWING TERMS AND CONDITIONS ARE DEEMED TO BE INCORPORATED BY REFERENCE IN ANY ORDER FOR THE SALE OF PFISTER PRODUCTS EFFECTIVE 3/1/13

PRICES

All prices are subject to change without notice and are not guaranteed. All taxes, duties or other charges are the responsibility of the Purchaser.

CHANGE OR CANCELLATIONS

Beyond 5 working days of our acknowledgement date no changes can be made. Additions to an order will be handled as a separate order and must meet applicable minimum order requirements.

Order cancellation on regular stock items only, or any portion thereof is allowed only upon prior written consent from Pfister, and the payment of cancellation charges deemed appropriate.

MINIMUM ANNUAL SALES VOLUME

Pfister reserves the right to discontinue direct sales to any customer who does not meet the minimum annual sales volume requirement. The current annual requirement is $25,ØØØ.

Your annual purchases are determined by accepted, non-cancelled, and shipped orders received during each calendar year. This requirement is necessary because the administration, sales, and service costs to keep an account open may exceed any profit which might be realized below the level of this minimum.

Pfister reserves the right to change any or all minimum annual sales volume requirements at any time.

Any customer who does not meet the annual sales volume requirements may continue to purchase Pfister products through a Pfister distributor.

ORDERS AND ACCEPTANCE

Pfister reserves the right to refuse to accept any order, and no purchase order or indication of acceptance shall create a contract or otherwise be binding upon Pfister unless and until the same is accepted in writing at the Pfister offices located in Lake Forest, California. In the event Pfister accepts an order from Purchaser, it is expressly understood and agreed that the terms and conditions herein set forth shall prevail, notwithstanding the fact that the same may conflict with or vary from the terms and conditions set forth on any purchase order or other form which Purchaser may use to place such order, and the placing of such order by Purchaser shall be deemed to note Purchaser's assent to the foregoing.

TERMS

2% net 30 days. Pfister reserves the right to alter credit terms up to and including cash-in-advance. Terms are F.O.B. Pfister distribution centers.

FREIGHT POLICY

A flat freight fee of $25 is applied to orders from $0 to $500. For orders from $501 to $1199, a freight charge of 4% of the pre-tax order value is applied. Order of $1200 or more qualify for prepaid freight.

PROMISES OF SHIPMENT

Pfister does not guarantee shipping dates notwithstanding anything contained herein to the contrary Pfister will not be responsible for any consequential, special or indirect damages of any nature, or any damages that include loss of profits suffered by Purchaser because of late shipping or delivery. Pfister is not responsible for delays due to reasons beyond its reasonable control such as fire, earthquake, strikes, material shortages, government regulations, etc.

LOSS OR DAMAGE IN TRANSIT

All products are sold F.O.B. Pfister distribution centers, with risk of loss passing to Purchaser at that point Purchaser is responsible for arranging and paying for all insurance against risk of loss of or damage to the products after Pfister delivers the products into the possession of the carrier.

RETURNED GOODS

No products may be returned without our prior written authorization. If a product return is authorized, our representative will provide you with a Return Goods Authorization form (RGA) for the returnable products. The RGA form must accompany the shipment of the returned products to us.

If products were defective or were shipped in error a credit at the invoice price will be issued or replacement products will be shipped only after a thoRough-Inspection of the returned products has been made by our representative and such inspection confirms that the products were defective or shipped in error. Please return defective products in their original packaging.

We have no obligation to agree to the return of non-defective products properly shipped. If, in our discretion, we agree to the return of non-defective, properly shipped products: (a) you will be issued a credit based on the price in effect when the products are returned or at the invoice price, whichever is lower, less the cost of return freight; (b) a 25% restocking charge will apply to all discretionary returns; and (c) returned products must be in their original package (master carton).

PRODUCT MODIFICATION

The right is reserved to deliver modified products in fulfillment of any accepted order unless Purchaser indicates otherwise in writing, placed conspicuously on the face of his/her purchase order.

INSPECTION

Purchaser shall, at its sole expense, submit all products shipped to a careful inspection upon arrival at the delivery point. All claims for damages, defects, errors, shortages or other failure of the products to conform to this agreement or their catalog description shall be delivered to Pfister in writing within ten (1Ø) days after such arrival. Failure to make any such claim within said period shall constitute acceptance of all products so delivered as conforming to the terms, conditions and specifications hereof, and in no event may such acceptance be thereafter revoked by Purchaser. Any claims by Purchaser shall be subject to inspection by Pfister or its authorized agent, to whom Purchaser shall make available access to such products and all relevant information relating to the claim. In the event Purchaser notifies Pfister of a claim within the above period and Pfister determines the claim to be valid, Purchaser's sole remedy shall be to have Pfister replace the defective or missing products within a reasonable time or authorize Purchaser to return the defective products to Pfister for credit or give Purchaser a credit for the missing products.

TAXES

All prices are exclusive of, and may be increased by the amount of, any and all applicable excise, sales, use, manufacturer's, value added and other taxes, levies, or imposts of a governmental nature, whether federal, state or local.

COLLECTION CHARGES

In the event it becomes necessary to incur any expense for collection of any overdue account, reasonable collection charges, including reasonable attorneys' fees, will be added to the balance due and Purchaser shall pay any said charges.

MODIFICATION

These terms and conditions express the entire understanding of the parties here to with respect to the subject matter here of . No variation hereof and no agreement modifying or supplementing the terms hereof shall be valid unless in writing and signed by an authorized officer of Purchaser and Pfister.

SECURITY INTEREST

Purchaser undertakes to execute such further documentation, including but not limited to financing statements, as may be required by Pfister to grant or perfect such security interest. In the event of default, Pfister will have rights provided a secured party under
the Uniform Commercial Code and Pfister is hereby authorized to file with any governmental authority or agency any documentation required to perfect such security interest.

NON-WAIVER

Any failure on the part of Pfister to insist upon the strict performance of any term or condition set forth herein shall not be deemed a waiver of any Pfister rights or remedies hereunder, nor of its right to insist upon the strict performance of the same or any other term hereof in the future. No waiver of any term or condition hereunder shall be valid unless in writing and signed by an authorized officer of Pfister.

EXPORT SALES

The above terms and conditions do not apply to original equipment manufacturers or export sales or purchases made in the United States of America for export purposes. Please contact the international group for further details.

SPECIAL FINISHES

Regular use of a soft cloth rinsed in warm, soapy water will keep a Pfister finish looking clean and new. The use of polish, detergents, abrasive cleaners, organic solvents or acid to clean, shine or polish such finishes will nullify the Pfister warranty as to such finishes.

PFISTER WARRANTY STATEMENT

The Product Warranty, attached hereto, is incorporated herein by reference.

DEFAULT

If Purchaser is in default under any order or contract with Pfister or any of its affiliated divisions or companies, or if Pfister at any time shall not be satisfied with Purchaser's financial conditions or responsibility, Pfister shall have the right, without prejudice to any other legal remedy, of suspending deliveries until such default or condition is remedied.

ASSIGNMENT

Purchaser shall not assign its orders nor any of its rights or obligations thereunder without Pfister's prior written consent.

APPLICABLE LAW

These Terms and Conditions and any subsequent sales agreements between Pfister and Purchaser shall be construed in accordance with the laws of the State of Delaware.

Notes

Notes

Notes

Warranty

© 2024 ASSA ABLOY
Pfister is a trademark of ASSA ABLOY Group.