STANLEY

National Hardware

Designed & Manufactured by

D&D Technologies

Product Catalog

Premium Grade Polymer Gate Hardware

Introduction

Stanley-National Hardware has been a leading manufacturer of gate hardware for more than a century. Over the course of the last 160-plus years, Stanley-National is a name that has become synonymous with quality, innovation, and customer service.

Now, as we move into a brand new century, Stanley-National Hardware is combining its legacy of manufacturing gate hardware products with its forward-looking innovation to introduce a brand new segment of the category — highest quality polymer gate hardware.

Partnering with the industry leader, D&D Technologies of Australia, Stanley-National will roll out a line of top quality polymer gate products, including latches, hinges and locks. Polymer gate hardware products are virtually indestructible and designed for today's upscale fence, gate and security applications.

Polymer gate hardware products offer consumers the quality and performance of state-of-the-art innovation. With a lifetime warranty, polymer gate products are rust-proof and corrosion-proof. You can be assured that Stanley-National polymer gate products will not:

Bind / Sag / Stain / Fade / Rust / Chip / Bend out of Shape

All D&D products come with stainless steel fasteners and are quick and easy to install. All products fit left-hand, right-hand, in-swing and out-swing gates.

When retail customers are deciding whether to place the Stanley-National line of polymer gate hardware products in their stores, they can be assured that they are buying the real thing. These are not knock-off items or cheap imitators; these are the genuine products manufactured only by D&D Technologies. Our customers will have an exclusive line of top quality products to promote.

Polymer gate hardware is the next step in Stanley-National's evolutionary process of bringing innovative products to market. Once again, Stanley-National Hardware rises above the crowd to lead the way in new product introductions.

Table of Contents

MagnaLatch™* Top Pull	4-5
MagnaLatch™ Vertical Pull	6-7
MagnaLatch™ Side Pull	8-9
LokkLatch™* Gate Latch	10-11
LokkLatch™ DELUXE Gate Latch	12-13
KwikFit™* Hinges	14-15
TruClose™* Self-Closing Hinges	16-19
TruClose™ Heavy Duty Self-Closing Hinges	20-23

*MagnaLatch, LokkLatch, TruClose, KwikFit and D are trademarks of D&D Group Pty Ltd, are registered in USA and elsewhere.
Stanley and Stanley in a notched rectangle are registered and unregistered trademarks of The Stanley Works or its affiliates in the United States and/or elsewhere.
The product is the subject of patent and design rights in USA and elsewhere. Marketing is under license.
© Copyright D&D Technologies Pty Ltd 2008. Neither whole or part of this publication may be reproduced without prior permission.

STANLEY National Hardware Designed & Manufactured by D&D Technologies

MAGNALatch®

MagnaLatch Top Pull –

The World's #1 Child Safety Gate Latch

MagnaLatch™ safety gate latches are a revolutionary breakthrough in latching for any gate where child safety is a concern.

Powered by strong "permanent magnets" which never lose power, these quality latches incur no mechanical interference to closure and so offer unprecedented reliability, safety and child resistance.

The Top Pull model is ideal for pool & child safety gates and can be used to ensure the latch release knob is mounted at code-required height (typically 54") on shorter gates.

Release knob is out of the reach of toddlers

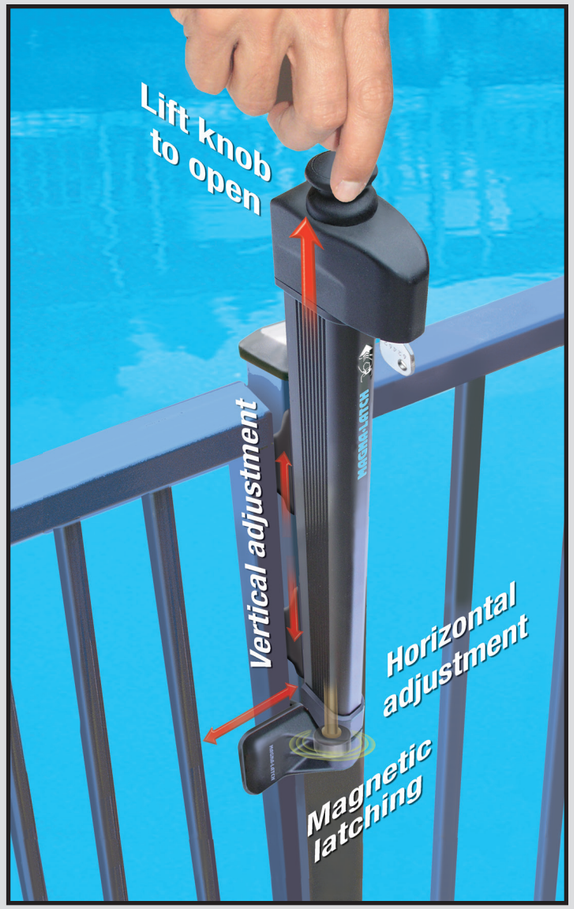

FEATURES AND BENEFITS

- Patented magnetic self-latching mechanism ensures no mechanical jamming during closure
- Ultra-strong polymers & stainless steel components – will never rust, bind or stain!
- Horizontally & vertically adjustable – during or after installation
- Meets most international pool safety codes
- Key lockable for added peace of mind
- Won't disengage from shaking & pulling
- Tested to over 400,000 cycles for unprecedented reliability and safety
- Limited Lifetime Warranty

Latches

STANLEY National Hardware Designed & Manufactured by D&D Technologies

SPECIFICATIONS – MagnaLatch Top Pull

Materials	Aluminum, engineering-grade polymers and stainless steel
Applications	- Pool fences and safety gates - Any gate that prevents toddlers from accessing hazardous areas and keeps pets from escaping
Fence Material	Metal, wood, vinyl
Size	20-1/2"H x 3-3/8"W (520mm x 86mm)
Adjustability	Vertical: 1-1/2" (38mm) Horizontal: 1/2" to 1-7/16" (13-37mm) Spacer: Up to 2" (51mm) horizontal adjustment using included spacer
Ideal Gate Gap	3/4" (19mm)
Cycle Rating	Tested to over 400,000 cycles
Warranty	Limited Lifetime Warranty
Package Contents	- (1) Latch & Striker bodies - (2) Mounting brackets - (3) Post cap spacers - (11) # 10 screws - (2) Keys - (1) 2" (51mm) Gap Spacer

When used in a swimming pool or spa application, the Top Pull model should be used on gates that are 4 feet (1220mm) or higher. Consult your local authorities for pool and spa fencing codes.

LIFESPAN LIMITED LIFETIME WARRANTY™

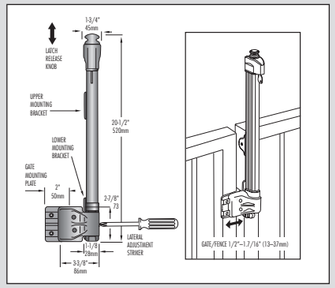

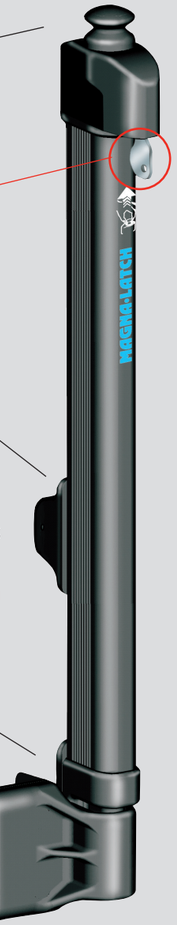

Latch release knob sits out of reach of toddlers

Key-lockable for added peace of mind
Key Blank reference: LF18 or LF31R

Side fixing legs for accurate alignment and added fixing strength. Reduces installation time.

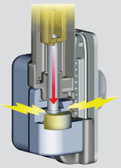

Permanent magnets never lose strength and are sealed from the elements to prevent corrosion

MagnaLatch Top Pulls and Vertical Pulls are keyed alike.

Vertical & horizontal adjustment makes installation easy and overcomes future gate misalignment from ground settling

PRODUCT DETAILS

Stanley Class #	National Class #	Stanley Stock #	National Stock #	Product Description	Units/Pack	Stanley UPC	National UPC
CD6207	V6207	S836-205	N346-551	MagnaLatch, Magnetic Child Safety Gate Latch	1	033923836203	038613346550

MagnaLatch Vertical Pull

MagnaLatch™ safety gate latches are a revolutionary breakthrough in latching for any gate where child safety is a concern.

Powered by strong "permanent magnets" which never lose power, these quality latches incur no mechanical interference to closure and so offer unprecedented reliability, safety and child resistance.

The Vertical Pull model is designed for safety gates of 5 feet or higher and offers a styling choice to the consumer.

It's also great for protecting pets as it won't disengage from shaking.

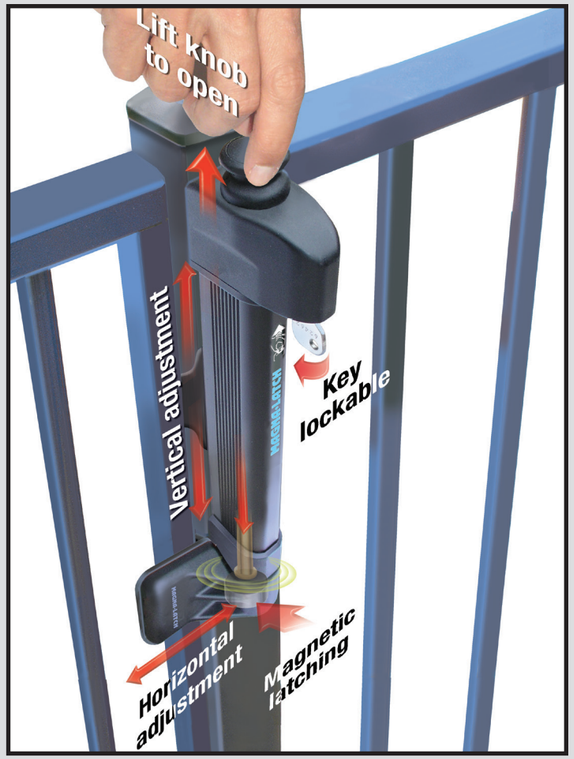

Prevents pets from escaping

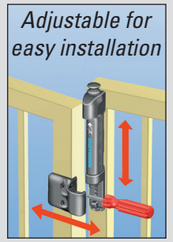

Adjustable for easy installation

The MagnaLatch allows for easy horizontal and vertical adjustment with just a turn of a screwdriver. It can be adjusted at any time during or after installation. This feature compensates for ground settling and gate movement that may occur over time. The adjustability of MagnaLatch ensures the gate will continue to operate properly long after installation.

FEATURES AND BENEFITS

- **Patented magnetic self-latching mechanism ensures no mechanical jamming during closure**
- **Ultra-strong polymers & stainless steel components – will never rust, bind or stain!**
- **Horizontally & vertically adjustable – during or after installation**
- **Meets most international pool safety codes**
- **Key lockable for added peace of mind**
- **Won't disengage from shaking & pulling**
- **Tested to over 400,000 cycles for unprecedented reliability and safety**
- **Limited Lifetime Warranty**

SPECIFICATIONS – MagnaLatch Vertical Pull

Materials	Aluminum, engineering-grade polymers and stainless steel
Applications	- Pool fences and safety gates 5 foot or taller - Any gate that prevents toddlers from accessing hazardous areas and keeps pets from escaping.
Fence Material	Metal, wood, vinyl
Size	10-1/4"H x 3-3/8"W (260mm x 86mm)
Adjustability	Vertical: 3/4" (19mm) Horizontal: 1/2" to 1-7/16" (13-37mm) Spacer: Up to 2" (51mm) horizontal adjustment using included spacer
Ideal Gate Gap	3/4" (19mm)
Cycle Rating	Tested to over 400,000 cycles
Warranty	Limited Lifetime Warranty
Package Contents	- (1) Latch & Striker bodies - (2) Mounting brackets - (3) Post cap spacers - (11) # 10 screws - (2) Keys - (1) 2" (51mm) Gap Spacer

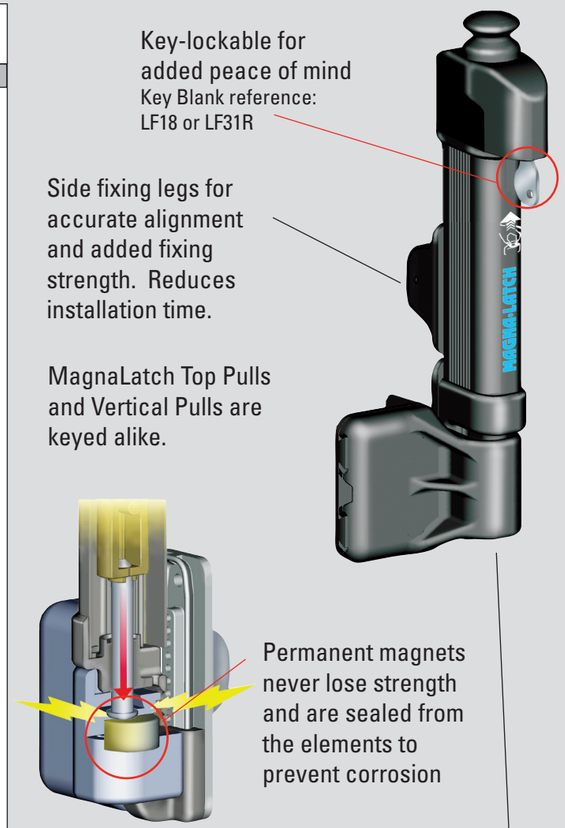

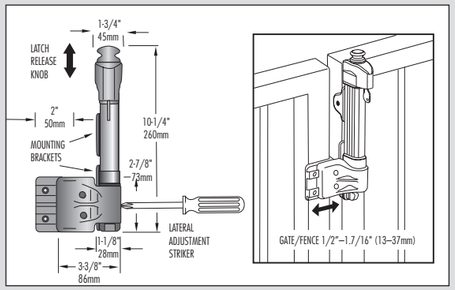

When used in a swimming pool or spa application, the Vertical Pull model should be used on gates that are 5 feet (1524mm) or higher. Consult your local authorities for pool and spa fencing codes.

LIFESPAN LIMITED LIFETIME WARRANTY™

PRODUCT DETAILS

Stanley Class #	National Class #	Stanley Stock #	National Stock #	Product Description	Units/Pack	Stanley UPC	National UPC
CD6207	V6207	S836-197	N346-544	MagnaLatch, Magnetic Safety Gate Latch	1	033923836197	038613346543

MAGNALatch®

Side Pull General Purpose Magnetic Gate Latch

The MagnaLatch™ Side Pull Model is the ideal choice for general-purpose walk gates.

Powered by super-strong "permanent magnets" that never lose their power, these quality latches have no mechanical interference to closure, offering unprecedented reliability.

Made from durable polymers and stainless steel components, they will never rust, bind or stain expensive fence materials.

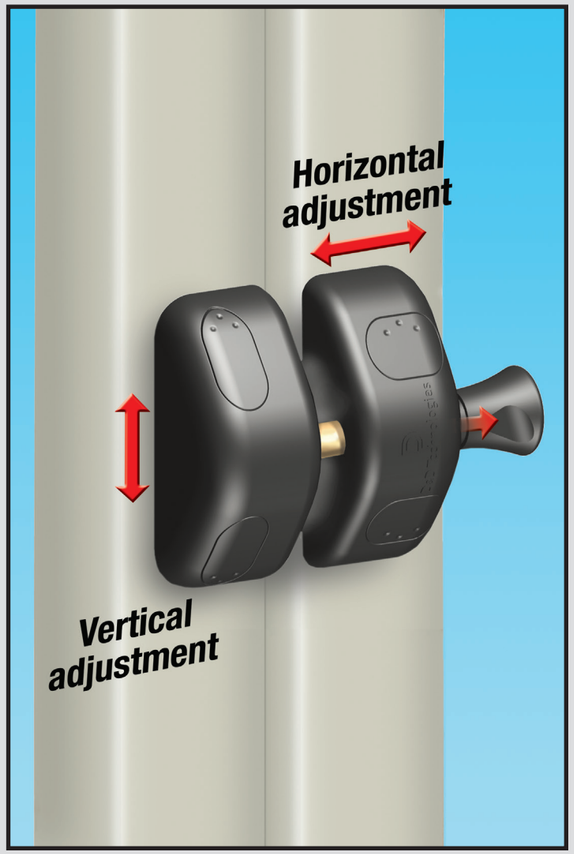

Permanent magnets never lose strength and are sealed from the elements to prevent corrosion

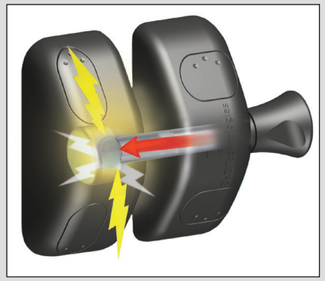

FEATURES AND BENEFITS

- **Patented magnetic latching mechanism ensures no mechanical jamming during closure**
- **Ultra-strong polymers & stainless steel components – will never rust, bind or stain!**
- **Horizontally & vertically adjustable – during or after installation**
- **Won't disengage from shaking & pulling**
- **Stylish Dress Caps included**
- **Limited Lifetime Warranty**

SPECIFICATIONS – General Purpose Magnetic Gate Latch

Materials	Engineering-grade polymer and stainless steel
Applications	General-purpose gates
Fence Material	Metal, wood, vinyl
Size	2-3/4"H x 2-1/2"W (71mm x 64mm)
Adjustability	Horizontal: 3/8" to 3/4" (10mm to 19mm)
Ideal Gate Gap	3/8" (10mm)
Cycle Rating	Tested to over 400,000 cycles
Warranty	Limited Lifetime Warranty
Package Contents	- (1) Latch Body & Keeper - (4) Dress Caps - (4) # 10 screws

When used on picket style gates that lead to a swimming pool or spa, a compliant shield must be used to prevent latch access by toddlers. Consult your local authorities for pool and spa fencing codes.

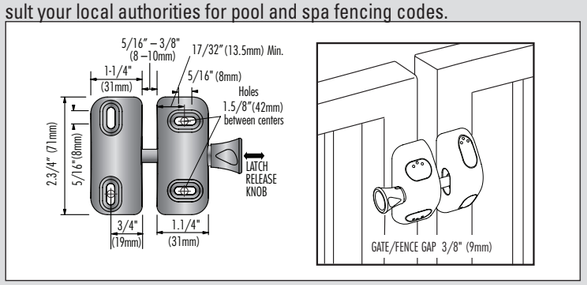

Fits in-swing, out-swing, left-handed and right-handed gates.

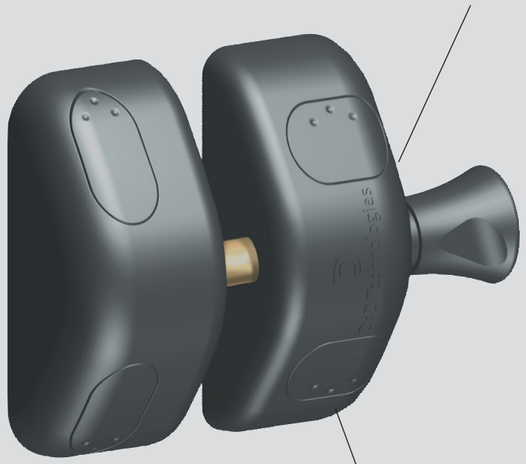

The MagnaLatch Side Pull model allows for easy horizontal and vertical adjustment with just a turn of a screwdriver. It can be adjusted up to 3/8" (10mm) at any time during or after installation. This feature compensates for ground settling and gate movement that may occur over time. The adjustability of MagnaLatch ensures the gate will continue to operate properly long after installation.

Dress Caps cover screw holes and add a stylish appearance

LIFESPAN LIMITED LIFETIME WARRANTY™

PRODUCT DETAILS

Stanley Class #	National Class #	Stanley Stock #	National Stock #	Product Description	Units/Pack	Stanley UPC	National UPC
CD6205	V6205	S836-189	N346-536	MagnaLatch, General Purpose Magnetic Gate Latch	1	033923836180	038613346536

STANLEY National Hardware Designed & Manufactured by D&D Technologies

LOKKLatch®

Key Lockable Gate Latch

For use on general-purpose gates, the key-lockable LokkLatch™ is hard to beat.

It offers a higher degree of versatility, with up to 1/2" (13mm) of vertical adjustment and horizontal adjustment for gate gaps of 3/8" - 1 3/8" (10mm - 35mm) available any time during or after installation.

The one model fits metal, wood and vinyl gates. Like all D&D products, the LokkLatch works on in-swing, out-swing, right-handed and left-handed gates.

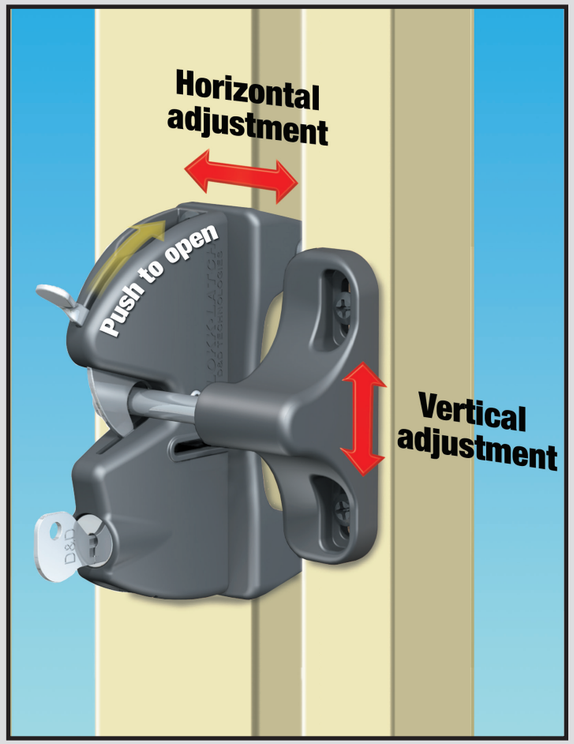

FEATURES AND BENEFITS

- **Ultra-strong polymers & stainless steel components – will never rust, bind or stain!**
- **Horizontally & vertically adjustable – during or after installation**
- **Key lockable for added security**
- **Easy installation – saves you time and money**
- **Low maintenance**
- **For use on metal, wood and vinyl gates**
- **Limited Lifetime Warranty**

STANLEY National Hardware Designed & Manufactured by D&D Technologies

SPECIFICATIONS – LokkLatch Key Lockable Gate Latch

Materials	Engineering-grade polymers and stainless steel
Applications	General purpose gates
Fence Material	Metal, wood, vinyl
Size	4-9/16"H x 2-1/16"W (115mm x 53mm)
Adjustability	Vertical: 1/2" (13mm) Horizontal: 3/8" to 1-3/8" (10-35mm)
Ideal Gate Gap	3/4" (19mm)
Warranty	Limited Lifetime Warranty
Package Contents	- (1) Latch Striker and Keeper - (1) Mounting bracket (metal) - (1) Mounting bracket (wood, vinyl) - (2) Keys - (8) # 10 Screws - (1) Bracket screw

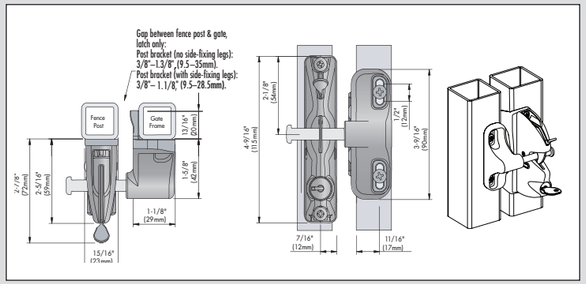

LIFESPAN LIMITED LIFETIME WARRANTY™

PRODUCT DETAILS

Stanley Class #	National Class #	Stanley Stock #	National Stock #	Product Description	Units/Pack	Stanley UPC	National UPC
CD6201	V6201	S836-163	N346-494	LokkLatch, Key Lockable Gate Latch	1	033923836166	038613346499

STANLEY National Hardware Designed & Manufactured by D&D Technologies

LOKKLatch® DELUXE

Dual Access Lockable Gate Latch

LokkLatch™ DELUXE is a heavy duty gravity latch designed for privacy and security gates. Its super-strong polymers and marine grade stainless steel components make it an ideal gate latch for security conscious consumers and light commercial applications.

Its dual, 6-pin lock cylinders can be re-keyed to match other locks at the home, apartment or commercial property. They can also be master-keyed for maximum convenience.

LokkLatch DELUXE can be locked and unlocked from both sides of the gate. No more running around to the other side of the gate to unlock the padlock or unsightly pull strings – talk about convenient!

Side fixing legs not only make the LokkLatch DELUXE easy to install, they add exceptional strength and improve tamper resistance.

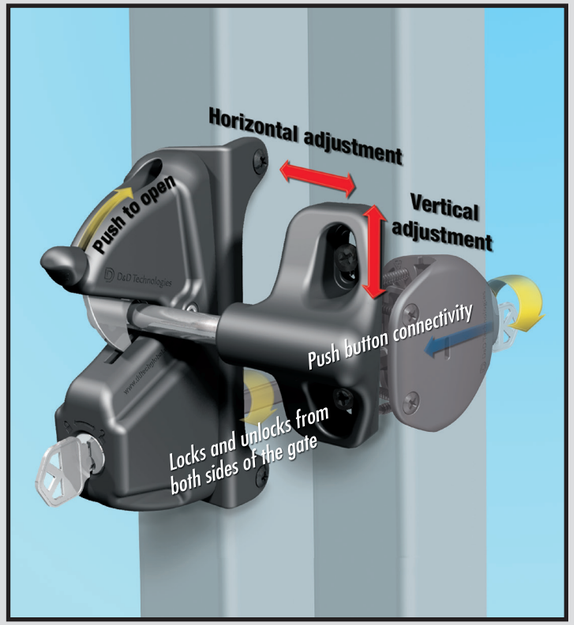

FEATURES AND BENEFITS

- **Locks and unlocks from both sides of gate**
- **Ultra-strong engineering polymers and stainless steel components**
- **Will never rust, bind or stain expensive fence material**
- **Horizontally & vertically adjustable – during or after installation**
- **Dual, rekeyable 6-pin locks for added security**
- **Drill only one hole through post**
- **Side fixing legs deliver an easy installation and superior strength**
- **Fits fence posts up to 6" deep**
- **Tested to 200,000 cycles**
- **Limited Lifetime Warranty**

STANLEY National Hardware Designed & Manufactured by D&D Technologies

SPECIFICATIONS – Dual Access Lockable Gate Latch

Materials	Engineering-grade polymers and marine grade stainless steel
Applications	Privacy and security gates
Fence Material	Metal, wood, vinyl
Size	5-7/8"H x 4-3/8"W (149mm x 112mm)
Adjustability	Vertical: 1/2" (13mm) Horizontal: 3/8" to 1-1/2" (10-38mm)
Ideal Gate Gap	1" (25mm)
Cycle Rating	Tested to 200,000 cycles
Warranty	Limited Lifetime Warranty
Package Contents	LATCH - (1) Latch/Lock and striker - (1) Mounting bracket - (3) Mounting bracket screws - (1) Tube for Vinyl (PVC) gates - (2) Push rods (one as a back-up) - (12) # 10 screws - (1) Fitting Jig - (2) Keys EXTERNAL ACCESS KIT - (1) Push button/lock assembly - (1) Alignment guide/bracket - (1) Housing/shroud

Horizontally and vertically adjustable. Compensates for gate sag.

Side fixing legs for accurate alignment and added strength. Reduces installation time and improves tamper resistance.

LIFESPAN LIMITED LIFETIME WARRANTY™

External Access Kit allows access from both sides of gate

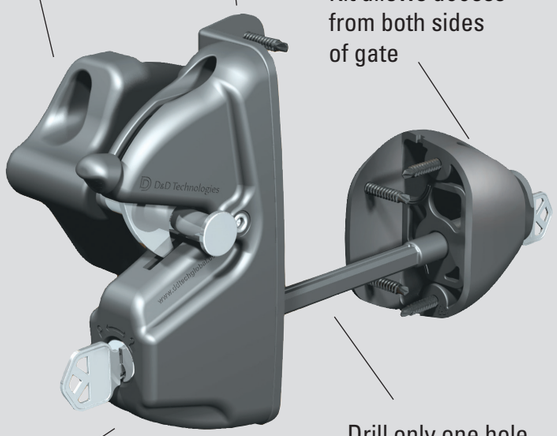

6-pin locks can be re-keyed to match other household locks. All LokkLatch DELUXE are keyed differently.
Key Blank reference: KW10

Drill only one hole through fence post. Fitting jig included in package to ensure accuracy.

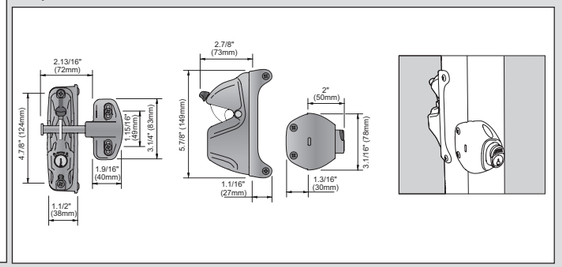

PRODUCT DETAILS

Stanley Class #	National Class #	Stanley Stock #	National Stock #	Product Description	Units/Pack	Stanley UPC	National UPC
CD6203	V6203	S836-171	N346-528	LokkLatch DELUXE, Dual Access Lockable Gate Latch	1	033923836173	038613346259

KwikFit™

General Purpose Gate Hinge

KwikFit™ gate hinges are the perfect choice for gates where self-closing is not required.

Made with super-strong engineering polymers and stainless steel components, KwikFit hinges won't rust, bind, sag or stain.

They feature unique side fixing legs that make it easy to align the hinges, reducing installation time. They also provide added strength.

FEATURES AND BENEFITS

- **Ultra-strong polymers & stainless steel components –will never rust, bind, sag or stain!**
- **Economical and durable**
- **Self-lubricating polymers**
- **Plain-pivoting hinges for general purpose gates**
- **Self Aligning legs – quick & easy installation**
- **Limited Lifetime Warranty**

SPECIFICATIONS – General Purpose Gate Hinge

Materials	Engineering-grade polymers and stainless steel
Applications	General-purpose gates
Fence Material	Metal, wood, vinyl
Size	4-5/16"H x 3-1/4"W (110mm x 83mm)
Gate Gap Variance	3/4" (19mm) fixed
Cycle Rating	Tested to 50,000 cycles
Maximum gate weight	100 lb (45kg)
Maximum Gate Load	375 lb (170kg)
Warranty	Limited Lifetime Warranty
Package Contents	- (2) Hinges - (16) #10 screws

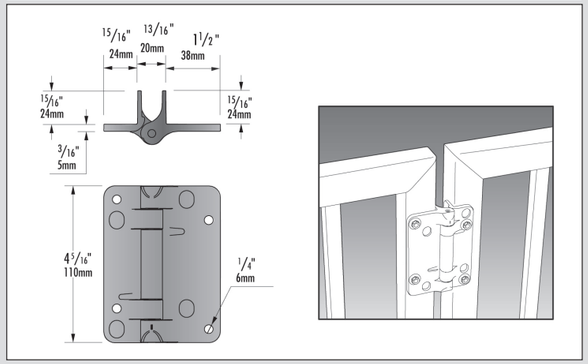

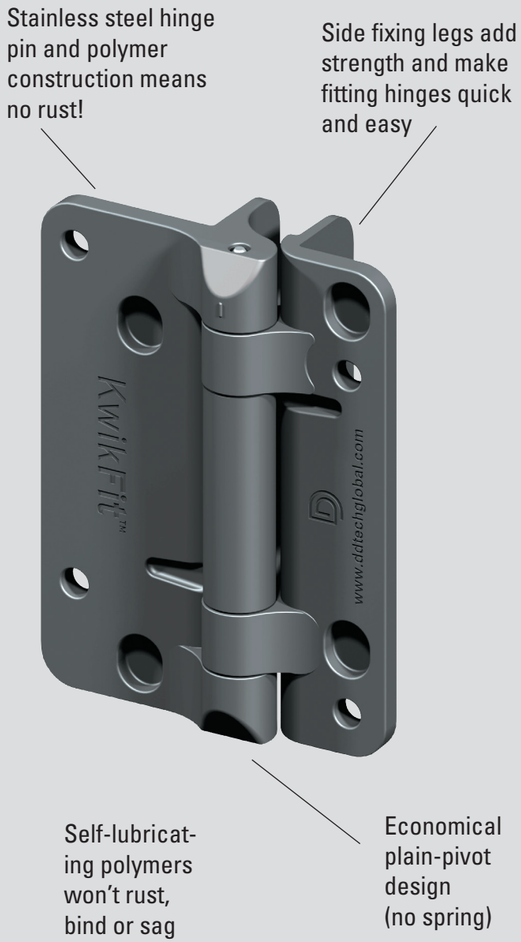

LIFESPAN LIMITED LIFETIME WARRANTY™

PRODUCT DETAILS

Stanley Class #	National Class #	Stanley Stock #	National Stock #	Product Description	Units/Pack	Stanley UPC	National UPC
CD6210	V6210	S836-213	N346-569	Kwik Fit, General Purpose Gate Hinge	2	033923836210	038613346567

TRU-CLOSE™
ADJUSTABLE, SELF-CLOSING GATE HINGES

Self-Closing Gate Hinge

Tru-Close™ hinges are self-closing and tension adjustable. Made from engineering polymers and stainless steel components, they will never rust, bind or stain expensive fence materials. D&D's unique blend of polymers is self-lubricating and UV resistant.

TruClose regular range hinges are suitable for self-closing gates up to 55 lb (25kg), with a maximum temporary gate load of up to 450 lb (205 kg). The polymers used have a memory, so if a temporary load is applied the hinge will return to its original shape.

All feature the patented TruClose easy tension adjustment mechanism, ensuring your gate closes first time, every time.

TruClose Self-Closing Hinge for metal gates

TruClose Self-Closing Hinge for vinyl/ wood gates

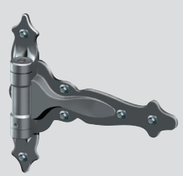

TruClose Self-Closing Hinge Deco-mold for wood/ vinyl gates

FEATURES AND BENEFITS

- **Patented adjustable self-closing mechanism ensures your gate closes first time, every time**
- **Ultra-strong polymers & stainless steel components – will never rust, bind, sag or stain!**
- **Tested to 75,000 cycles for unprecedented reliability and safety**
- **Self-lubricating and UV-stabilized**
- **Limited Lifetime Warranty**

SPECIFICATIONS – TruClose Self-Closing Gate Hinge for Metal Gates

Materials	Engineering-grade polymers and stainless steel
Applications	General purpose self-closing hinges - great for pool gates, child safety gates and pet enclosures
Fence Material	Aluminum, steel
Size	3-3/16"H x 2-1/2"W (97mm x 64mm)
Gate gap variance	1/4" to 7/8" (6-22mm)
Ideal gate gap	3/4" (19mm)
Maximum self-closing weight	55 lb (25kg)
Maximum Gate Load	450 lb (205kg)
Cycle Rating	Tested to 75,000 cycles
Warranty	Limited Lifetime Warranty
Package Contents	- (2) Hinges - (8) #10 screws

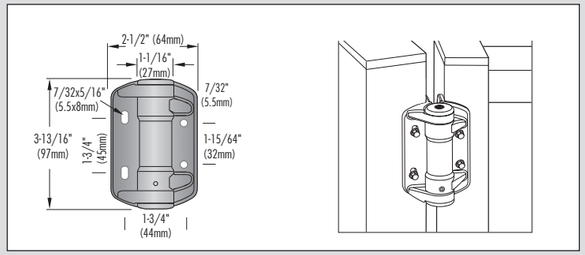

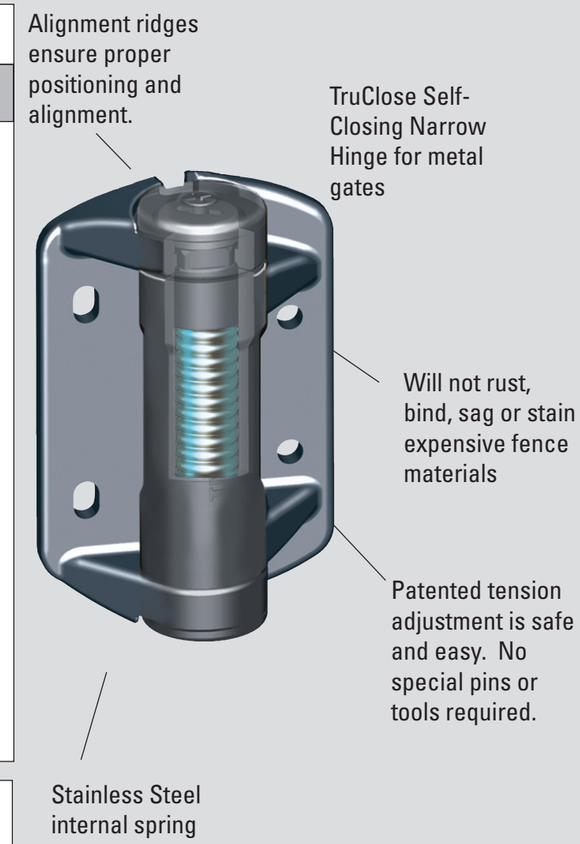

LIFESPAN LIMITED LIFETIME WARRANTY™

PRODUCT DETAILS

Stanley Class #	National Class #	Stanley Stock #	National Stock #	Product Description	Units/Pack	Stanley UPC	National UPC
CD6212	V6212	S836-221	N346-577	Tru-Close Self-Closing Gate Hinge For Metal Gates	2	033923836227	038613346574

STANLEY National Hardware Designed & Manufactured by D&D Technologies

SPECIFICATIONS – TruClose Self-Closing Gate Hinge for Wood and Vinyl Gates

Materials	Engineering-grade polymers and stainless steel
Applications	General purpose self-closing hinges - great for pool gates, child safety gates and pet enclosures
Fence Material	Wood, vinyl
Size	3-9/16"H x 5-1/4"W (90mm x 134mm)
Gate gap variance	1/4" to 7/8" (6-22mm)
Ideal gate gap	3/4" (19mm)
Maximum self-closing weight	55 lb (25kg)
Maximum Gate Load	450 lb (205kg)
Cycle Rating	Tested to 75,000 cycles
Warranty	Limited Lifetime Warranty
Package Contents	- (2) Hinges - (12) #10 screws

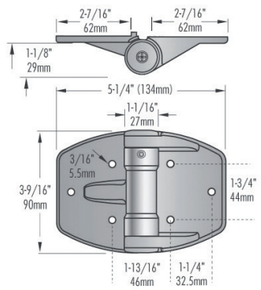

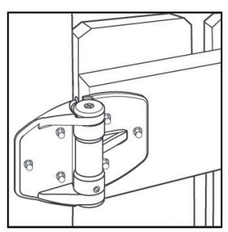

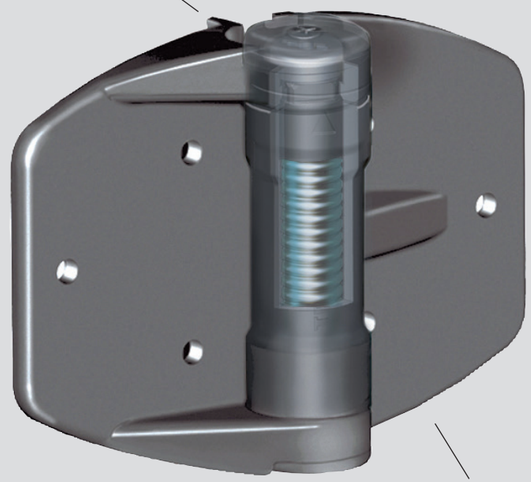

LIFESPAN LIMITED LIFETIME WARRANTY™

PRODUCT DETAILS

Stanley Class #	National Class #	Stanley Stock #	National Stock #	Product Description	Units/Pack	Stanley UPC	National UPC
CD6216*	V6216	S836-247	N346-593	Tru-Close, Self-Closing Gate Hinge for Wood and Vinyl Gates	2	033923836241	038613346598

STANLEY National Hardware Designed & Manufactured by D&D Technologies

SPECIFICATIONS – TruClose Self-Closing T-Hinges

Materials	Engineering-grade polymers and stainless steel
Applications	General purpose self-closing hinges - great for pool gates, child safety gates and pet enclosures
Fence Material	Wood, vinyl
Size	7-3/4"H x 9"W (197mm x 229mm)
Gate gap variance	1/4" to 7/8" (6-22mm)
Ideal gate gap	3/4" (19mm)
Maximum self-closing weight	55 lb (25kg)
Maximum Gate Load	450 lb (205kg)
Cycle Rating	Tested to 75,000 cycles
Warranty	Limited Lifetime Warranty
Package Contents	- (2) Hinges - (14) #12 screws

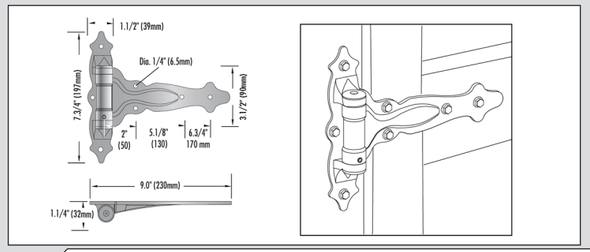

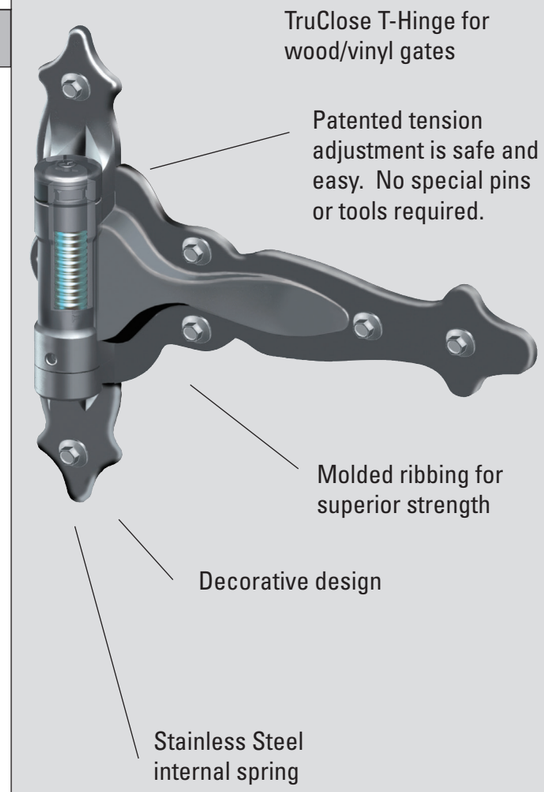

LIFESPAN LIMITED LIFETIME WARRANTY™

PRODUCT DETAILS

Stanley Class #	National Class #	Stanley Stock #	National Stock #	Product Description	Units/Pack	Stanley UPC	National UPC
CD6220*	V6220	S836-254	N346-601	Tru-Close Self-Closing T Hinge For Wood and Vinyl Gates	2	033923836258	038613346604

STANLEY National Hardware Designed & Manufactured by D&D Technologies

TRUClose®

Heavy Duty Self-Closing Gate Hinge

TruClose™ hinges are self-closing and tension adjustable. Made from engineering polymers and stainless steel components, they will never rust, bind, sag or stain expensive fence materials.

D&D's unique blend of polymers is self-lubricating and UV resistant.

The TruClose Heavy Duty hinge range are suitable for heavy gates and high-traffic applications. They are ideal for gates weighing up to 132 lb (60kg), with a maximum temporary gate load up to 700 lb (318kg).

Different models are available to suit wood, metal and vinyl gates.

All feature the patented TruClose easy tension adjustment mechanism, ensuring your gate closes first time, every time.

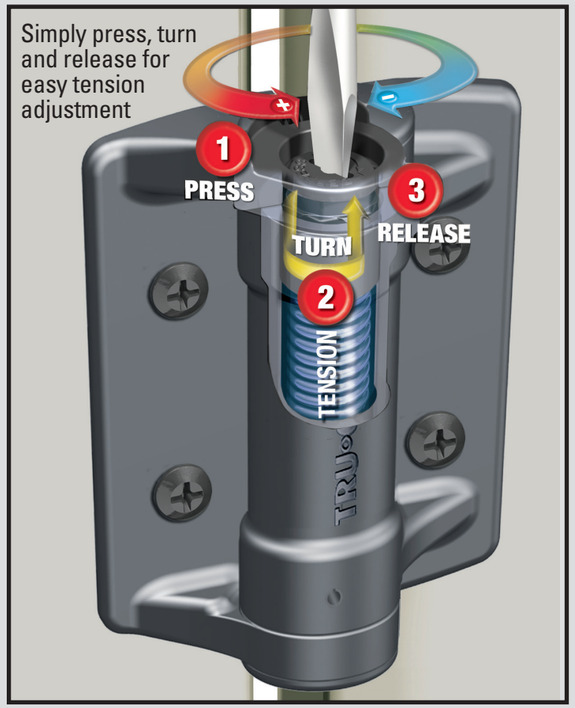

FEATURES AND BENEFITS

- **Patented adjustable self-closing mechanism ensures your gate closes first time, every time**
- **Ultra-strong polymers & stainless steel components – will never rust, bind, sag or stain!**
- **Tested to 200,000 cycles for unprecedented reliability and safety**
- **Self-lubricating and UV-Stabilized**
- **Limited Lifetime Warranty**

STANLEY National Hardware Designed & Manufactured by D&D Technologies

SPECIFICATIONS – TruClose Heavy Duty Self-Closing Gate Hinge

Materials	Engineering-grade polymers and stainless steel
Applications	Heavy pool and child safety gates. High traffic gates and pet enclosures
Fence Material	Aluminum, steel
Size	5"H x 3-1/2"W (127mm x 90mm)
Gate gap variance	1/4" to 1" (6-25mm)
Ideal gate gap	3/4" (19mm)
Maximum self-closing weight	132 lb (60kg)
Maximum Gate Load	700 lb (318kg)
Cycle Rating	Tested to 200,000 cycles
Warranty	Limited Lifetime Warranty
Package Contents	- (2) Hinges - (8) #12 screws

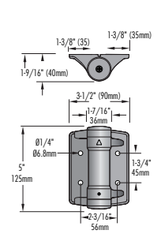

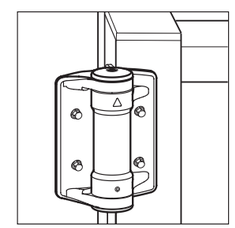

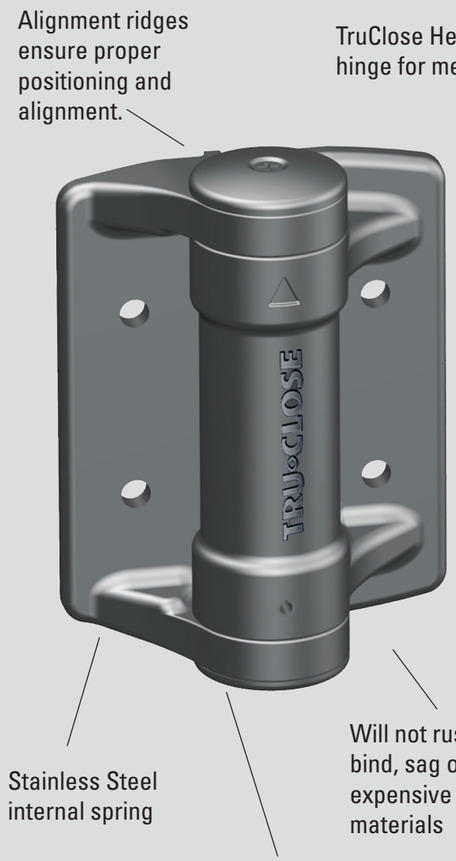

LIFESPAN LIMITED LIFETIME WARRANTY™

PRODUCT DETAILS

Stanley Class #	Stanley Stock #	Product Description	Units/Pack	Stanley UPC
CD6214**	S836-239	Tru-Close Self-Closing Heavy Duty Gate Hinge for Metal Gates	2	033923836234

***Product available only in Stanley Architectural Grade Brand*

TRUClose®

Self-Closing Heavy Duty Gate Hinge

TruClose™ hinges are self-closing and tension adjustable. Made from engineering polymers and stainless steel components, they will never rust, bind, sag or stain expensive fence materials.

Our unique blend of polymers is self-lubricating and UV resistant.

The TruClose Heavy Duty hinge range are suitable for heavy gates and high-traffic applications. They are ideal for gates weighing up to 132 lb (60kg), with a maximum temporary gate load up to 700 lb (318kg).

Different models are available to suit wood, metal and vinyl gates.

All feature the patented TruClose easy tension adjustment mechanism, ensuring your gate closes first time, every time.

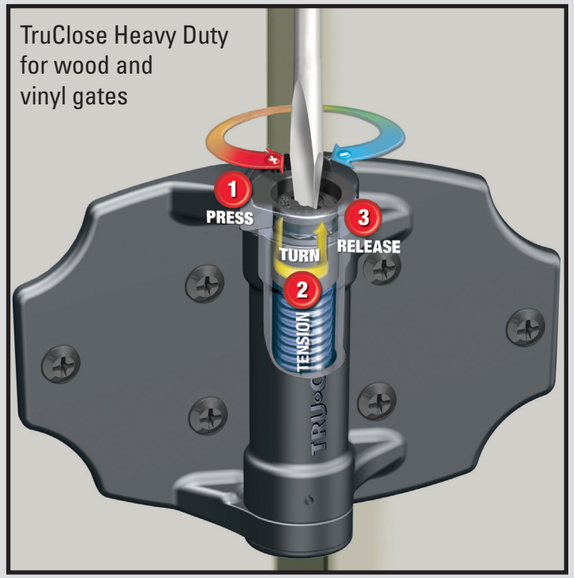

FEATURES AND BENEFITS

- **Patented adjustable self-closing mechanism ensures your gate closes first time, every time**
- **Ultra-strong molded polymers & stainless steel components – will never rust, bind, sag or stain!**
- **Tested to 200,000 cycles for unprecedented reliability and safety**
- **Self-lubricating and UV-Stabilized**
- **Limited Lifetime Warranty**

SPECIFICATIONS – TruClose Self-Closing Heavy Duty Gate Hinge

Materials	Engineering-grade polymers and stainless steel
Applications	Heavy pool and child safety gates. High traffic gates and pet enclosures.
Fence Material	Wood, vinyl
Size	5"H x 6-15/16"W (127 x 176mm)
Gate gap variance	1/4" to 1" (6-25mm)
Maximum self-closing weight	132 lb (60kg)
Maximum Gate Load	700 lb (318kg)
Cycle Rating	Tested to 200,000 cycles
Warranty	Limited Lifetime Warranty
Package Contents	- (2) Hinges - (12) #12 screws

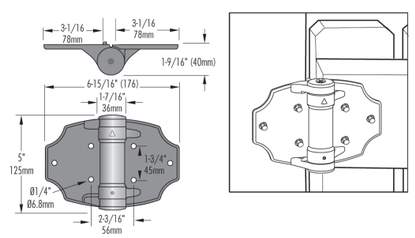

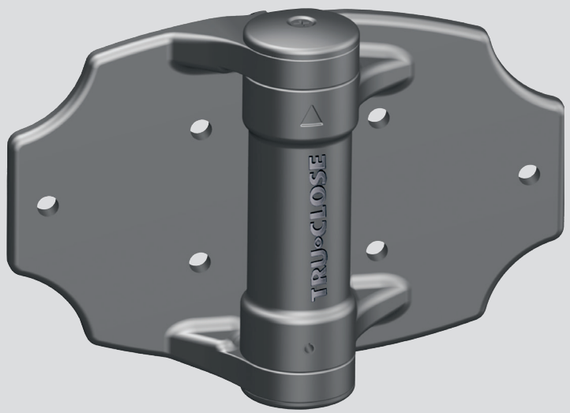

LIFESPAN
LIMITED LIFETIME WARRANTY™

PRODUCT DETAILS

Stanley Class #	Stanley Stock #	Product Name	Description	Units/Pack	Stanley UPC
CD6218**	S836-262	TruClose	Wide, Self-Closing Heavy Duty Gate Hinge For Wood and Vinyl Gates	1	033923836265

***Product available only in Stanley Architectural Grade Brand*

STANLEY

National Hardware

Designed & Manufactured by

D&D Technologies

Stanley Hardware 480 Myrtle Street New Britain, CT 06053
1-800-622-4393 www.stanleyworks.com