DIGITECH

DISTRIBUTED BY CANON

Canon

DIGITECH TEXAS LT3/X2 AND LT3/X3 UV FLATBED PRINTERS

High Productivity, Precision, Quality



Designed from the ground up by DigiTech, a U.S. company well versed in large-format UV printer technology, the DigiTech Texas LT3/X2 and LT3/X3 printers offer high productivity, precision, and overall quality.

The Texas LT3/X2 and LT3/X3 series printers come in several configurations. Standard CMYK with the options of White, Orange, Gray, and Varnish. These printers offer full-bleed printing on rigid media up to five feet by ten feet and can accommodate substrates with a maximum thickness of up to six inches. What sets the Texas printer apart is its meticulous attention to detail in both design and manufacturing, resulting in exceptional printing capabilities, remarkable output, and outstanding image quality. Reliability is a crucial aspect in a production environment where uninterrupted operation is essential, and the Texas printer excels in this area. Moreover, the standard auto-unloader helps to increase throughput and streamline the workflow, reducing the need for manual labor. This allows for continuous printing and finishing, efficiently handled by a single operator.

BUILT SMART FOR PRODUCTION ENVIRONMENTS

Precision Built

The TruFire Precision Print System (PPS) by DigiTech encompasses a range of design refinements that offer exceptional dot placement accuracy, reliability, and productivity.



Dot placement accuracy is important for producing the highest quality prints. By ensuring the vacuum table is flat across the entire surface, the predictability and repeatability of where the ink drops land are vastly improved. DigiTech has gone to great lengths to design a vacuum table that is not only accurate but strong enough to withstand heavy use without harm, easily supporting operators while cleaning or servicing the device.

- Durable and flat machined vacuum table designed to provide an exceptional degree of flatness.
- X-axis accurate across the bridge to 1 micron; Y-axis is accurate to 1 micron on both sides of the gantry.
- TruFire PPS is an interactive user interface to give the operator complete control.
- Software aided printhead alignment process for easy, accurate alignment.



Productivity

Print speed is just one aspect of measuring productivity. Media handling on the LT3 Series includes features that aid a single operator to be optimally productive.

- **Pneumatic Registration Pins** help to ensure fast repeatable board loading
- **Two-zone vacuum table** 4' x 8 ' and 5' x 10'
- **Reversable air flow** for lifting boards for easy removal by hand or by utilizing the auto-unloader
- **Integrated Auto Unloader**

In addition to the integrated auto-unloader, the Texas printer can be incorporated into multiple automation solutions that streamline the production workflow from print-to-cut, or from print-to-cut and stack. These solutions help significantly reduce labor costs and errors.

Maximizing Uptime

Designed by technicians to eliminate the need for technicians.

By focusing on reliability and ease of service, the Texas UV flatbed printer helps eliminate downtime, resulting in efficient and uninterrupted printing.

- **Linear drive system** for high-speed, precise movement without belts or screws that are prone to wear
- **Embedded linear encoder strips** in steel rails for long-term protection
- **White ink recirculation system** for consistent, uninterrupted printing
- **Remote Connectivity** to diagnose and potentially resolve the problem without the need for a site visit
- **Spare Parts Kit** reduces downtime by allowing the operator to replace parts

PrintSight Software

PrintSight displays a range of data in an intuitive user interface, allowing for real-time reporting of ink/toner usage, media type printed, square footage, print time, machine status, and more. With the ability to enter your ink cost per liter/bottle and media cost, PrintSight can quickly calculate the cost of the job. As a print shop owner, PrintSight gives you the detail you need to make informed decisions, allowing you to better utilize your printers and maximize your profitability while maintaining competitive pricing.

Example Production Speeds (sq. ft./hr)

	LT3/X2		LT3/X3	
	4’ x 8’	5’ x 10’	4’ x 8’	5’ x 10’
Coro Sign Mode 2 Pass[1]	3,892	4,376	5,691	7,489
3 Pass	2,603	2,914	3,799	4,749
3 Pass Curemask	1,949	2,438	2,851	3,405
4 Pass Curemask	-	-	2,277	2,676
5 Pass Curemask	1,299	1,457	-	-

[1] *Special jetting mode in Binary 14 picoliter jetting mode.*



Designed for Automation



Shown with optional DT CNV-3 Conveyor System

Enhance your workflow by adding a conveyor and/or cutting system that seamlessly integrates with the Texas LT3/X2 and LT3/X3 printers. Unlock the full potential of automated production, streamlining operations from print to pallet. The focus shifts from “boards per hour” to “finished boards per hour.”

Built for efficiency, the fully automated system incorporates conveyors, extension tables, cutters, and stackers, delivering a comprehensive print-to-cut.

Integration Examples

SINGLE PRINTER - SINGLE CUTTER

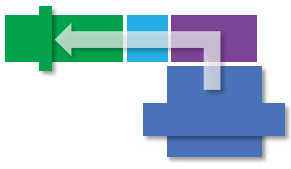

SINGLE PRINTER - DUAL CUTTER

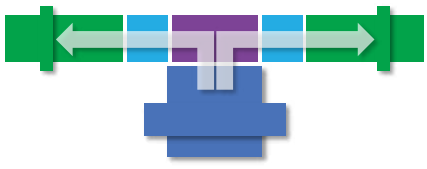

DUAL PRINTER - SINGLE CUTTER

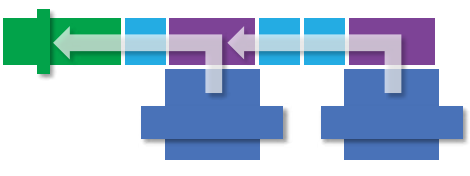

IMC Print-to-Cut Automation

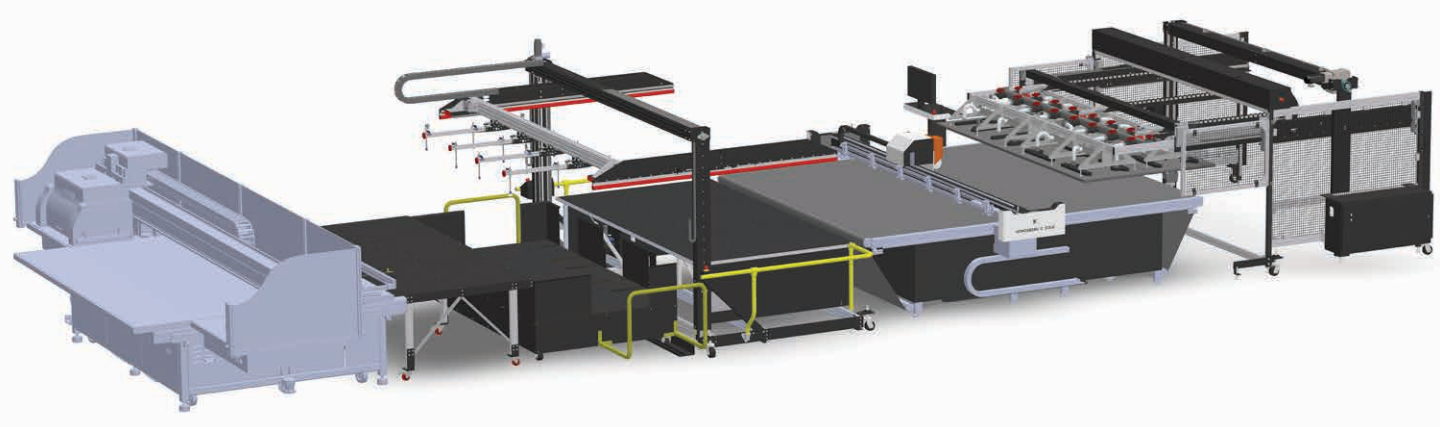

Adding a print-to-pallet workflow to the DigiTech Texas printer can help to enhance operational efficiency by streamlining the entire production process. This fully automated print-to-cut workflow eliminates the need for manual intervention, allowing materials to move seamlessly from printing to cutting without user handling. As a result, productivity increases while the risk of errors and material damage is greatly reduced.

By enabling hands-free material handling, the system helps to ensure consistent output quality and minimizes downtime caused by human mistakes. The direct-to-cut design not only accelerates throughput but also supports a more reliable and scalable production environment. Integrating this workflow into the DigiTech Texas printer setup empowers teams to meet higher demand with greater precision and less labor.

Once printing is complete, the automated unloader, equipped with suction cups capable of handling boards up to 5’ x 10’, swiftly transfers the material to the pusher table, which guides the print into the Accumulator Tray. The DigiTech Texas printer immediately begins the next job while the Vector Feeder lifts the completed print and places it onto the integrated digital cutter* for immediate scanning and cutting.

The final stage in the print-to-pallet workflow involves the Telestacker, which efficiently removes the finished job from the cutter and places it onto a pallet or finishing table. This seamless, automated sequence not only reduces manual handling but also maximizes throughput, making the entire workflow exceptionally efficient and highly productive.

**Compatible Digital Cut Systems: Kongsberg, Colex, Zund.*
For questions on other cut systems and integration compatibility, please consult your Canon U.S.A. representative.

Straight-Line Print to Cut with IMC Components:

1	Texas LT3 Series Printer	4	IMC Vector Feeder
2	IMC TP510 Pusher Table	5	Digital Cutter*
3	IMC Accumulator Tray	6	IMC Telestacker

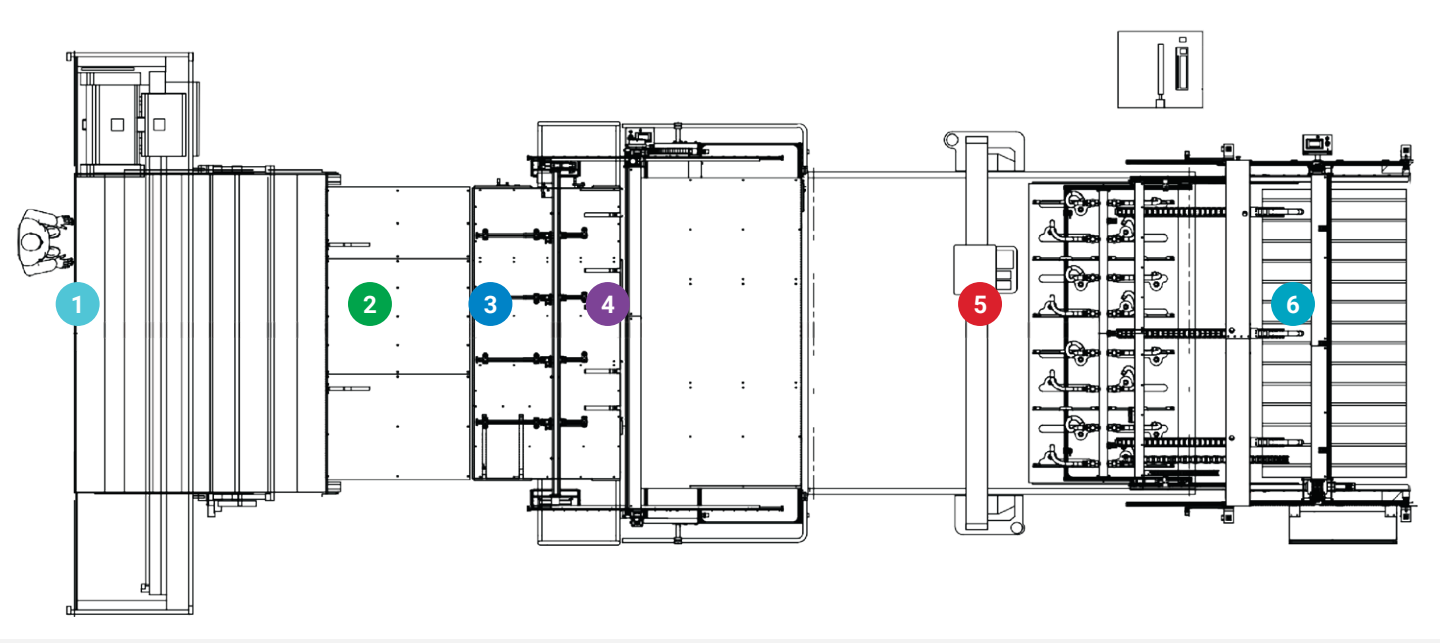

**Compatible Digital Cut Systems: Kongsberg, Colex, Zund.*
For questions on other cut systems and integration compatibility, please consult your Canon U.S.A. representative.

BENEFITS OF THE LT3/X2 AND LT3/X3 PRINTERS

Strong Vacuum Power

- Single, more robust vacuum blower
- Larger diameter vacuum hoses
- Helps to maximize media hold-down

Excellent Image Quality

Enhanced ink formulation for expanded color capabilities

- **Orange ink** broadens the color gamut for richer, more vibrant prints
- **Gray ink** enables smoother gradations and subtle transitions
- **Strong and heavy beam and frame** reduce vibration and resonance for sharper, more consistent output

Safety Enhancements

Safety scanners on both sides of the printer gantry

- Configurable zones to meet varying safety requirements
- Printing automatically stops and resumes when zones are triggered and cleared

Advanced light curtain

- Indicator lights on both sides for clear machine status visibility

Improved Productivity

Production-oriented user interface

- Simplifies job management with intuitive batching and queuing
- Allows grouping and direct sending of multiple files to the printer
- Eliminates need to return to workstation for each job
- Boosts productivity with efficient machine-side control

Larger Static Control System**

Larger anti-static bar and control box

- Improves static reduction throughout the print process
- Continuously reads media surface and adjusts charge to eliminate static buildup
- Enhances dot placement accuracy, printhead stability, and ink adhesion

***X2 and X3 utilize the same static control system. The X3 uses a larger unit to accommodate the third row of printheads.*



Texas LT3/X2 and LT3/X3 Printer Specifications

SPECIFICATIONS	LT3/X2	LT3/X3
Printer Design	UV True Flatbed Printer	
Print Quality	Up to 1200 dpi	
UV Curing Technology	LED-UV	
Table Size	5’ x 10’	
Vacuum Sections	Zoned 4’ x 8’ and 5’ x 10’	
Rigid Media Thickness	Up to 6”	
Printing Accuracy	X-Axis (across Bridge): 1 micron Y-Axis: 1 micron both sides of gantry	
Printhead Technology	Kyocera Dual Row Staggered	Kyocera Three Row Staggered
Grayscale Technology	4, 6, 10, and 14 picoliters	
Print Speeds	Up to 4,376 sq. ft. per hour (Coro Sign Mode 2 Pass)	Up to 7,489 sq. ft. hr (Coro Sign Mode 2 Pass)
Auto Unloader	Changes sheets of media in less than 10 seconds	
Ink	Cyan, Magenta, Yellow, Black, White, Orange, Gray, Varnish	
Main Ink Reservoir Capacity	Standard: 1.75 liters per Color Optional: 2.75 liters per Color	2.75 liter per Color
Ink Channel Configuration		
(2x) CMYK	**8 Printheads**	**18 Printheads (3x)** **CMYK + Orange and option of White, Gray, or Varnish**
(2x) CMYK + W, or Or, Gray, or Var	**10 Printheads**	
(2x) CMYK + W and option of Or, Gray, or Var	**12 Printheads**	
Software & Rip Requirements	Onyx Version 22 or greater, Caldera, ErgoSoft, PrintSight	
Network Requirements	1000 base-T with Dedicated IP Address	
Electrical Requirements	Supply voltage: 400Y/230VAC 4 wires plus ground (3 Phase, 1 neutral, 1 ground) Phase to neutral = 230VAC; Phase to Phase = 400VAC Not phase sensitive **LT3/X3:** Amperage = 60A (41KVA max.) **LT3/X2:** Amperage = 50A (35KVA max.) Power line frequency; 50/60Hz	
Air Requirements		
Pressure	100-150 psi	
Volume Capacity	5 scfm peak (Compressed air must be dust and moisture free)	
Environmental Requirements		
Temperature	70-78 °F (21-26 °C)	
Recommended Relative Humidity	40% - 60% RH	
Atmosphere	Well Ventilated, Low Dust	
Printer Dimensions (L x W x H)	234” x 113” x 70” (143” W w/ unloader extended)	234” x 127” x 70” (157” W w/ unloader extended)
Weight	6,800 lbs.	8,000 lbs.

DigiTech

DISTRIBUTED BY CANON

Canon

usa.canon.com/largeformat

Canon is a registered trademark of Canon Inc. in the United States and elsewhere. All other referenced product names and marks are trademarks of their respective owners and are hereby acknowledged. Neither Canon Inc. nor Canon U.S.A., Inc. represents or warrants any third-party product or feature referenced hereunder. Availability, prices, and specifications are subject to change without notice. Not responsible for typographical errors. Print speeds are based on internal testing, and may vary depending on volumes and size, type, and media orientation settings. Though stated output maximums represent the machine’s maximum output in a given period, it is not recommended to operate the machine at or beyond such maximums on an ongoing basis. Printer output images may be simulated. Products may be shown with optional accessories.
©2025 Canon U.S.A., Inc. All rights reserved.

12/25-2687-14043